SV10B说明书
SZ:110*110mm

Bluetooth Speakerphone

User Manual

Speakerphone

Speakerphone fix up the insufficient for those products that can only connect other communication terminals via USB cable, it added Bluetooth connection function. It can be connected with mobile phones and other communication terminals via Bluetooth, it has good echo cancellation function. The best distance of microphone collection is 3 meters, suitable for small professional conference rooms within 15 square meters and personal offices. At the same time, speakerphone is also suitable for remote interactive teaching and students' online assignments.

Speakerphone can be connected to the PC for unobstructed full-duplex voice calls, adaptive microphone sampling rate of 16KHz, automatically adapted to the different voice bandwidth of audio and video products or systems. Its sound quality is clear. It can support the video device, VoIP, UC unified communications and instant communication software, achieve convenient Internet collaborative office, improve the efficiency of meeting and working. Speakerphone is a economical conference system audio configuration.

Speakerphone products are exquisite and small, it is so easy to carry that suitable for private travel too.

Content

Parts List ---------- 1

Speakerphone Overview ---------- 2

Speakerphone Keypad ---------- 3

LED Indicator ---------- 4

Turning the Power On and Off ---------- 5

Connection Steps for USB ---------- 6

Connecting a headset/headphones ---------- 7

Wireless Connection ---------- 8

Wireless Bluetooth Adapter Specification ---------- 9

Bluetooth Connection ---------- 10

Applications ---------- 11

Advantages ---------- 12

Specification ---------- 13

Parts List

Speakerphone

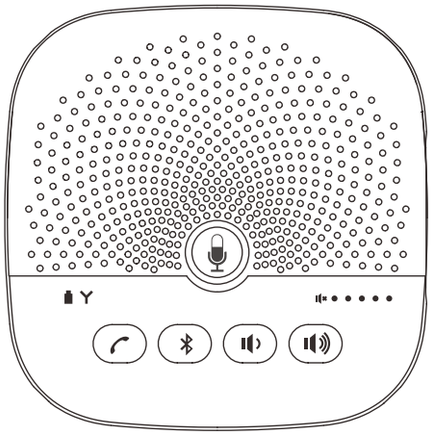

Parts List

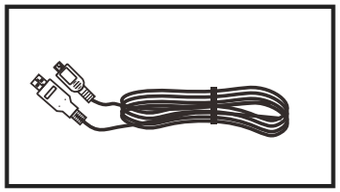

USB cable

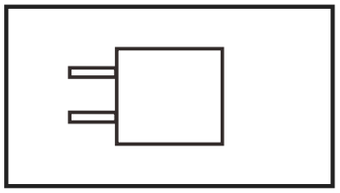

Power adapter

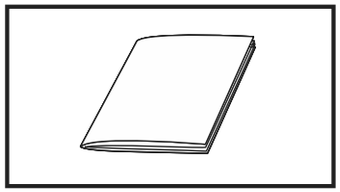

User manual

Optional Accessories

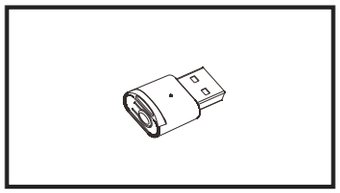

Bluetooth adapter

Speakerphone Overview

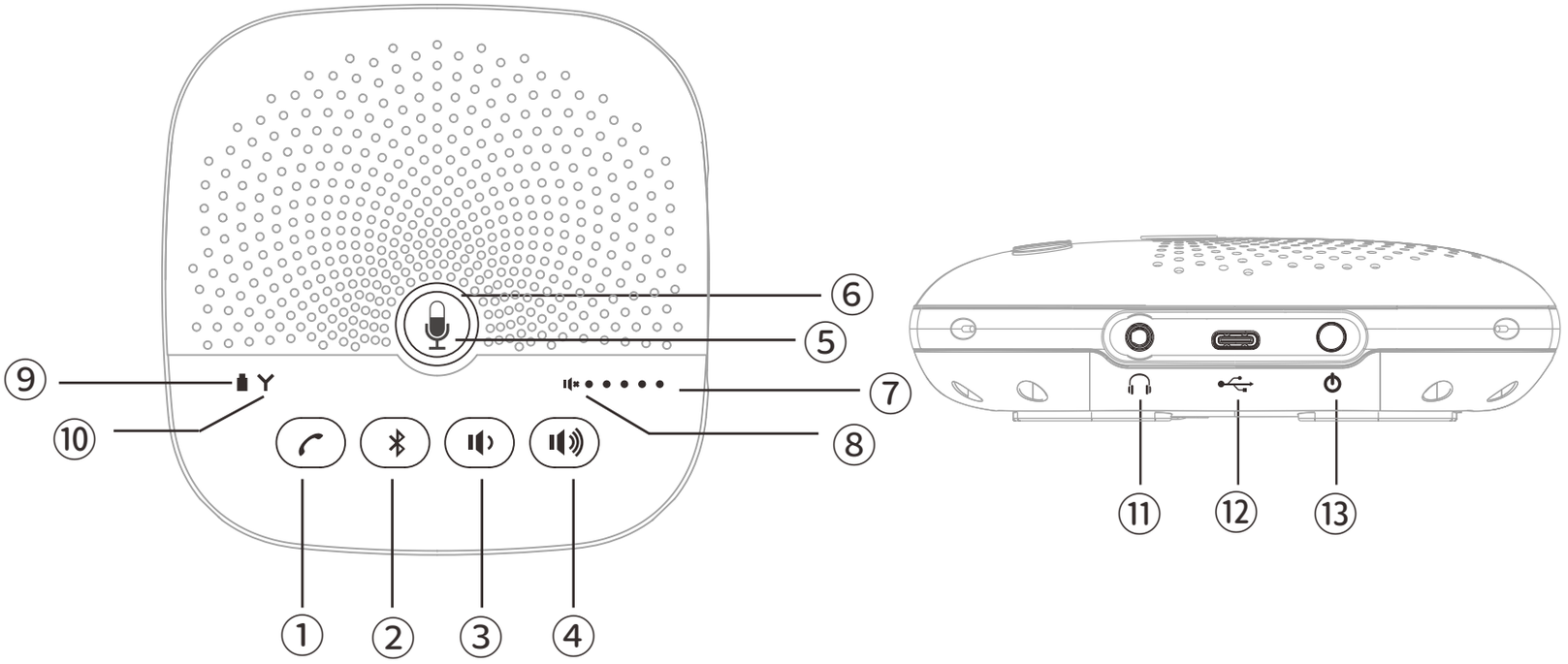

① Answer/End call

② Bluetooth

③ Volume down

④ Volume up

⑤ Microphone mute

⑥ Microphone status indicator

⑦ Volume status indicator

⑧ Speaker mute indicator

⑨ Power status indicator

⑩ Bluetooth status indicator (Y-type indicator)

⑪ Headset port

⑫ USB port

⑬ Power switch

Speakerphone Keypad

	Volume button	Volume up/down
	Answer/End call button	Answer/End the Bluetooth call
	Bluetooth button	Turn on/off Bluetooth
	Mute microphone button	Turn on/off the microphone
	Power switch	Long press(3 secs) to turn on/off the power

“ ⏻ ” This button is on the side of the speakerphone

LED Indicator

Wireless status indicator (Y-type indicator)	Green light flashing	Bluetooth pairing state
	Green light on	Bluetooth connected
Microphone status indicator	Red light on	Microphone mute
	Green light on	Microphone working normally
Volume status indicator	Green light on	The brightness of status LED will increase or decrease with the speaker volume up or down.
Speaker mute indicator	Red light on	Speaker mute status
Power status indicator	Red light on	Low battery, must be recharged
	Green light on	Charging
	Green light off	The battery is fully

Turning the Power On and Off

Press and hold the power button " ⏻ " for three seconds or more to turn the power on.

Press and hold again for three seconds or more to turn off the power.

In addition, when the USB port of the host is connected to the computer or external audio and video terminals, the host will turn on automatically.

Note: When not charging, if there is no operation for 3 minutes or more, the power turns off automatically(automatic power off function).

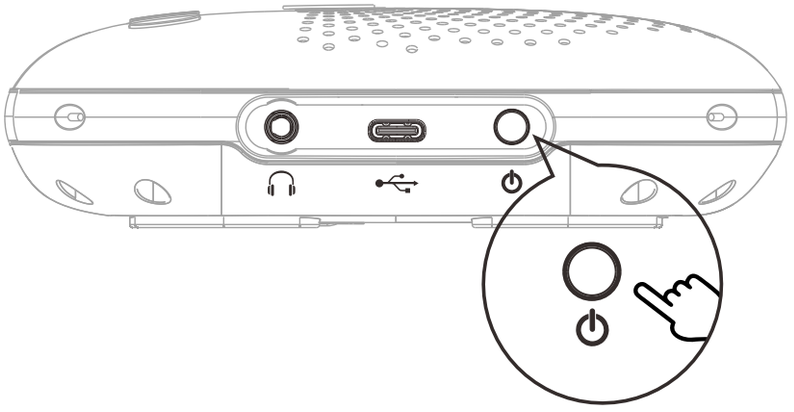

Connection Steps for USB

Connecting the PC/ video system to Speakerphone's USB port with a USB cable. It will takes a few seconds to install the driver automatically for the first setup.

Note: Right-click the microphone icon at the bottom right of the PC screen and click "sound" to display the "sound" screen. Click the "Playback" and "Recording" tabs and check that "Bluetooth speakerphone" is set as the default device. If it is not set as the default device, click "Bluetooth Speakerphone" and click "Set Default".

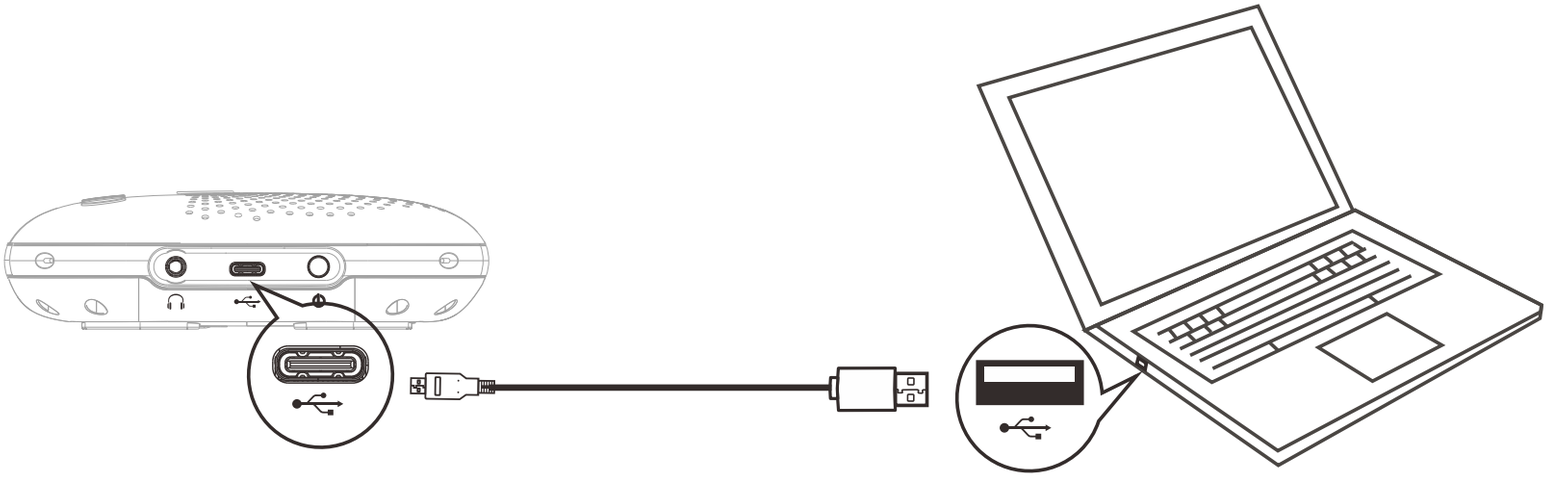

Connecting a headset/headphones

You can communicate using a headset/headphones by connecting a commercial headset/headphones, equipped with a 3.5mm and 3-cores audio cable to the “ 🎧 ” port on this product.

Wireless Connection

Speakerphone connection steps:

When the Speakerphone is under normal working condition, press " ✱ " to turn on Bluetooth for pairing. Then the Bluetooth status indicator (Y type indicator) will flashing;

1. Insert the Bluetooth adapter into your computer or other devices. The adapter will enter pairing mode. The adapter is in flashing (flashing once every 300ms);

2. Bluetooth adapter will automatically search speakerphone Bluetooth. About 10 seconds, the speakerphone and the adapter will establish Bluetooth Connection. After successful connection, the Bluetooth status indicator on the speakerphone (Y type indicator) will be long on. Adapter in Slow flash state (light flashes once a second);

3. Wireless voice calls can be made at this time.

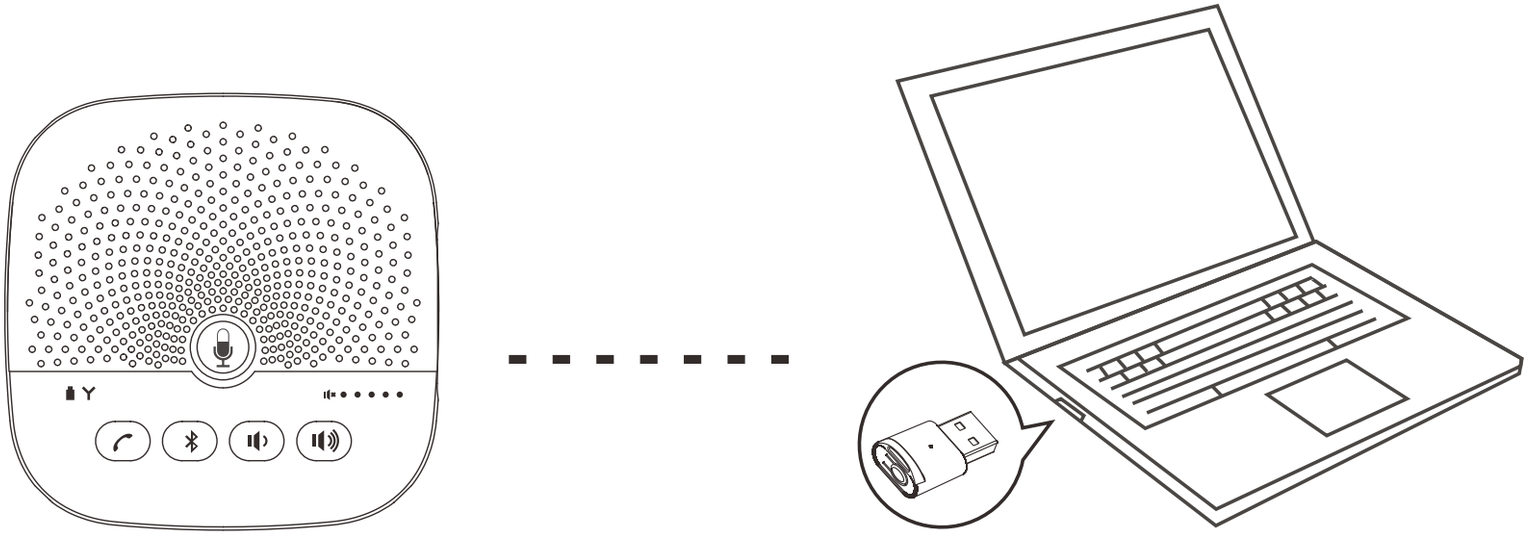

Wireless Bluetooth Adapter Specification

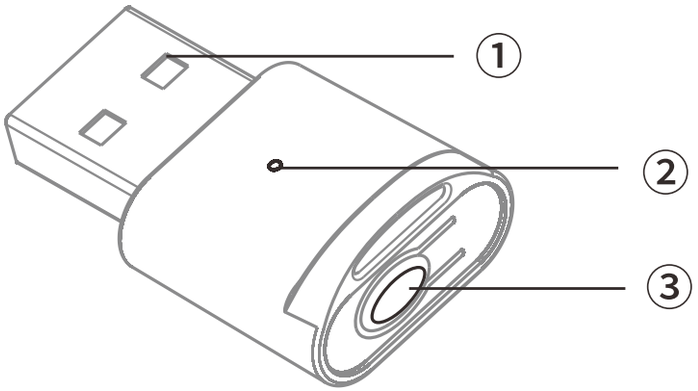

① USB port (for power supply and USB audio connection)

② Adaptor LED indicator

③ Adaptor control keys

LED Status Indicator

Adaptor LED indicator	light flashing quickly	The device searches for pairing status
	light flashing slowly	The connection is successful

Keypad

Adaptor control keys	Double click on the key	The device enters the paring tate
	long press 5 seconds	Clear pair record

Bluetooth Connection

1. Press and hold the" ✱ " button until the Bluetooth Indicator(Y type indicator) flashes green light. The speakerphone is under Bluetooth pairing mode.
2. Turn on the Bluetooth function of the mobile phone and click search.
3. Search "Bluetooth speakerphone" with your Bluetooth device and connect.
4. When the Bluetooth was set up, the Bluetooth indicator(Y type indicator) will keep lighting on.Then you can use the speakerphone for audio call.
5. Press the " ✱ " button to turn off Bluetooth.

Note:
When Bluetooth fails to match within 40 seconds, Bluetooth needs to be restarted.

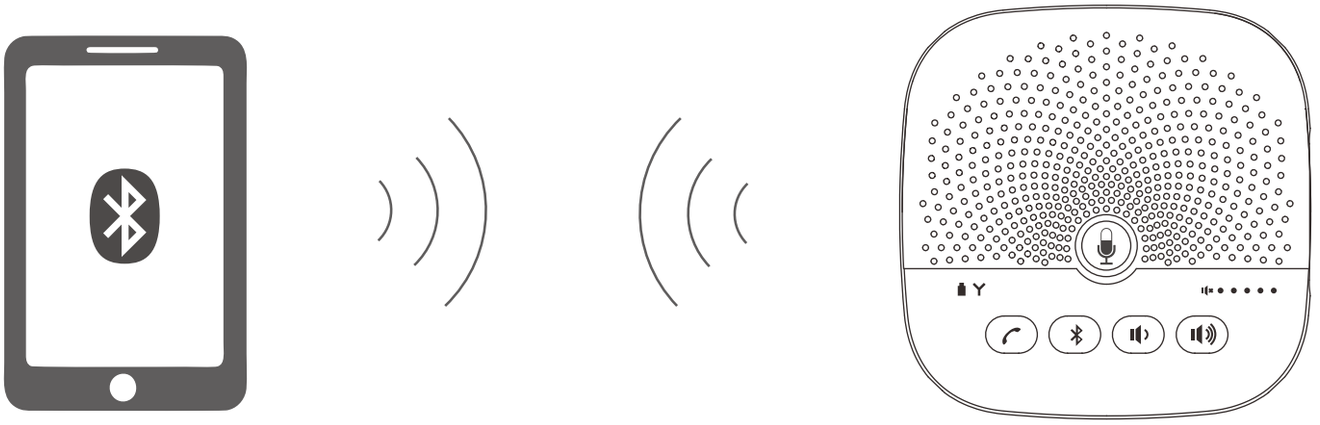

Applications

The video conference software

- Support wireless, can connect with a pc or video device without cable to realize wireless voice call
- Support USB communication, support video conference terminal, multimedia communication terminal
- Support video conference software, various network conference software, UC unified communication
- Support Zoom, Huawei Cloud, Suirui, Haostong, Webex, Aver, Bizconf, Skype
- Support speaker signal output through 3.5mm interface, connect to external mixer and sound system to achieve local sound reinforcement to meet the needs of a larger venue

Advantages

1. Provide full-duplex hands-free phone calls for terminal device connect to speakerphone via the USB channel of the terminal device:
   - Video conferencing
   - Internet audio
   - VoIP audio calls
   - Bluetooth audio calls

2. Advanced HD-Voice audio processing technologies deliver remarkably rich, full audio for natural, effortless conversations:
   - True full duplex performance allows user to listen and speak at the same time without audio cutting in and out.
   - Distributed Echo cancellation.
   - Noise cancellation.
   - Advanced automatic level management.

3. 4 inner omni-directional microphones best collection distance of 3 meters, 360 degree range.
4. Support Bluetooth to make a conference call with mobile phone, and connect to a PC or video device with a Bluetooth adapter without USB cable.
5. Built-in chargeable battery: 2600mAh, talk time 9 hours and stand-by time 120 days.

Specification

1.DSP processing technology

Echo Cancellation Noise Suppression Automatic gain control

2.Audio parameters

Microphone frequency response: 100Hz-7KHz

Speaker frequency response: 100Hz-20KHz

Microphone sound-pickup coverage: The best collection distance is 3 meters, 360 degree range

Speaker Volume: up to 80dB

3.System Requirements

Windows,Android,iOS,Linux

4.Interface

USB port*1 Headset 3.5mm port*1

5.Usage environment and specifications

Reverberation Time: < 0.2 sec Battery Capacity: 2600mAh

Noise Degree: < -50 dBA

Power Requirement: 5V ⎓ 500mA

Storage Temperature: 0°C-70°C Humidity: 20%-85%

Operating Temperature: 4°C-50°C (operating state)

This device complies with Part 15 of the FCC Rules. Operation is subject to the following two conditions:

(1) This device may not cause harmful interference, and
(2) This device must accept any interference received, including interference that may cause undesired operation.
Warning: Changes or modifications not expressly approved by the party responsible for compliance could void the user's authority to operate the equipment.

NOTE: This equipment has been tested and found to comply with the limits for a Class B digital device, pursuant to Part 15 of the FCC Rules. These limits are designed to provide reasonable protection against harmful interference in a residential installation. This equipment generates uses and can radiate radio frequency energy and, if not installed and used in accordance with the instructions, may cause harmful interference to radio communications. However, there is no guarantee that interference will not occur in a particular installation. If this equipment does cause harmful interference to radio or television reception, which can be determined by turning the equipment off and on, the user is encouraged to try to correct the interference by one or more of the following measures:

Reorient or relocate the receiving antenna.
Increase the separation between the equipment and receiver.
Connect the equipment into an outlet on a circuit different from that to which the receiver is connected.
Consult the dealer or an experienced radio/TV technician for help.

FCC Radiation Exposure Statement:
This equipment complies with FCC radiation exposure limits set forth for an uncontrolled environment.

Product Warranty Registration Card

Item No.: _____

Date of purchase: _____

User Name: _____

Tell: _____ Fax : _____

Address: _____

E-mail: _____ Zip Code: _____

Dealer name : _____

Dealer phone : _____