Appendix A - System Verification

Test Laboratory: TUV Inc. Date: 2026/8/3

System Check_HSL2450MHz

DUT: D2450V2 - SN804

Communication System: UID 0, CW; Frequency: 2450 MHz; Duty Cycle: 1:1
Medium: HSL2450_260804 Medium parameters used: f = 2450 MHz; σ = 1.811 S/m; ε_r = 39.935; ρ = 1000 kg/m^3
Ambient Temperature：23.4 °C;Liquid Temperature：22.3℃

DASY Configuration:

- Electronics: DAE4 Sn855; Calibrated: 2026/4/20
- Probe: EX3DV4 - SN7400; ConvF(6.98, 6.88, 8.06) @ 2450 MHz; Calibrated: 2026/4/23
- Sensor-Surface: 1.4mm (Mechanical Surface Detection), z = -9.0, 31.0
- Phantom: ELI V5.0 (20deg probe tilt); Type: QD OVA 002 AA; Serial: 1153
- DASY52 52.10.4(1535); SEMCAD X 14.6.14(7501)

Pin=250mW/Area Scan (9x9x1): Measurement grid: dx=12mm, dy=12mm
Maximum value of SAR (measured) = 19.7 W/kg

Pin=250mW/Zoom Scan (7x7x7)/Cube 0: Measurement grid: dx=5mm, dy=5mm, dz=5mm
Reference Value = 113.7 V/m; Power Drift = -0.04 dB
Peak SAR (extrapolated) = 23.6 W/kg
SAR(1 g) = 12.1 W/kg; SAR(10 g) = 5.67 W/kg
Maximum value of SAR (measured) = 19.7 W/kg

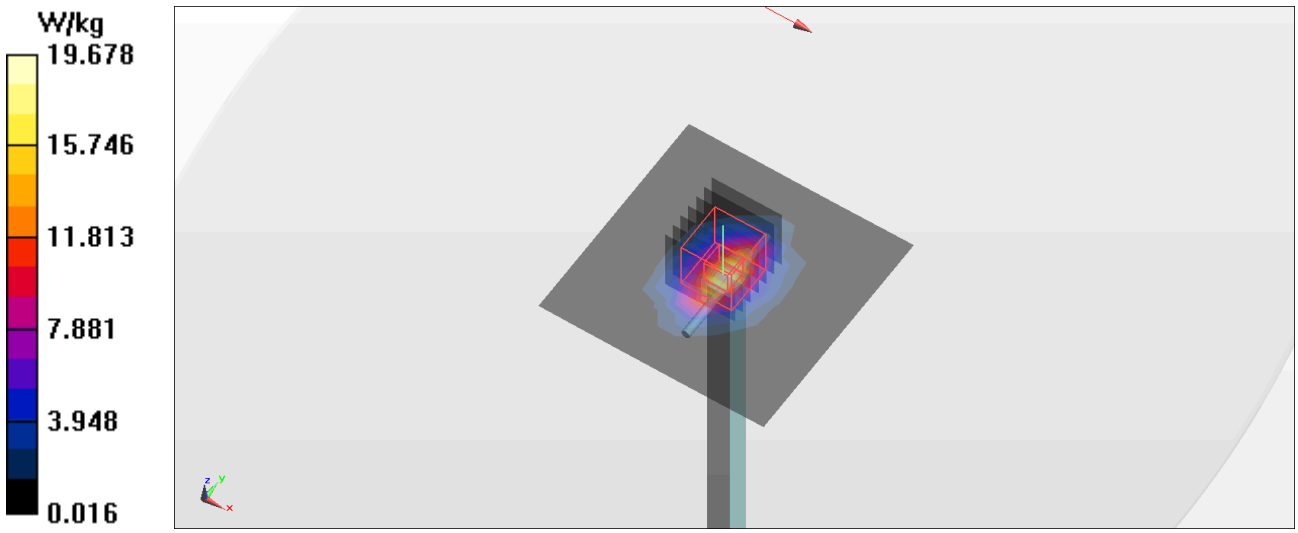

Test Laboratory: TUV Inc. Date: 2026/8/4

System Check_HSL5250MHz

DUT: D5GHzV2 - SN1235

Communication System: UID 0, CW; Frequency: 5250 MHz; Duty Cycle: 1:1
Medium: HSL5G_260804 Medium parameters used (interpolated): f = 5250 MHz; σ = 4.565 S/m; ε_r = 35.86; ρ = 1000 kg/m^3
Ambient Temperature：23.6 ℃;Liquid Temperature：22.1℃

DASY Configuration:

- Electronics: DAE4 Sn855; Calibrated: 2026/4/20
- Probe: EX3DV4 - SN7400; ConvF(5.27, 5.2, 6.09) @ 5250 MHz; Calibrated: 2026/4/23
- Sensor-Surface: 1.4mm (Mechanical Surface Detection), z = -9.0, 23.0
- Phantom: ELI V5.0 (20deg probe tilt); Type: QD OVA 002 AA; Serial: 1153
- DASY52 52.10.4(1535); SEMCAD X 14.6.14(7501)

Pin=100mW/Area Scan (10x10x1): Measurement grid: dx=10mm, dy=10mm
Maximum value of SAR (measured) = 11.1 W/kg

Pin=100mW/Zoom Scan (7x7x7)/Cube 0: Measurement grid: dx=4mm, dy=4mm, dz=1.4mm
Reference Value = 68.82 V/m; Power Drift = -0.05 dB
Peak SAR (extrapolated) = 32.0 W/kg
SAR(1 g) = 7.28 W/kg; SAR(10 g) = 2.06 W/kg
Maximum value of SAR (measured) = 18.9 W/kg

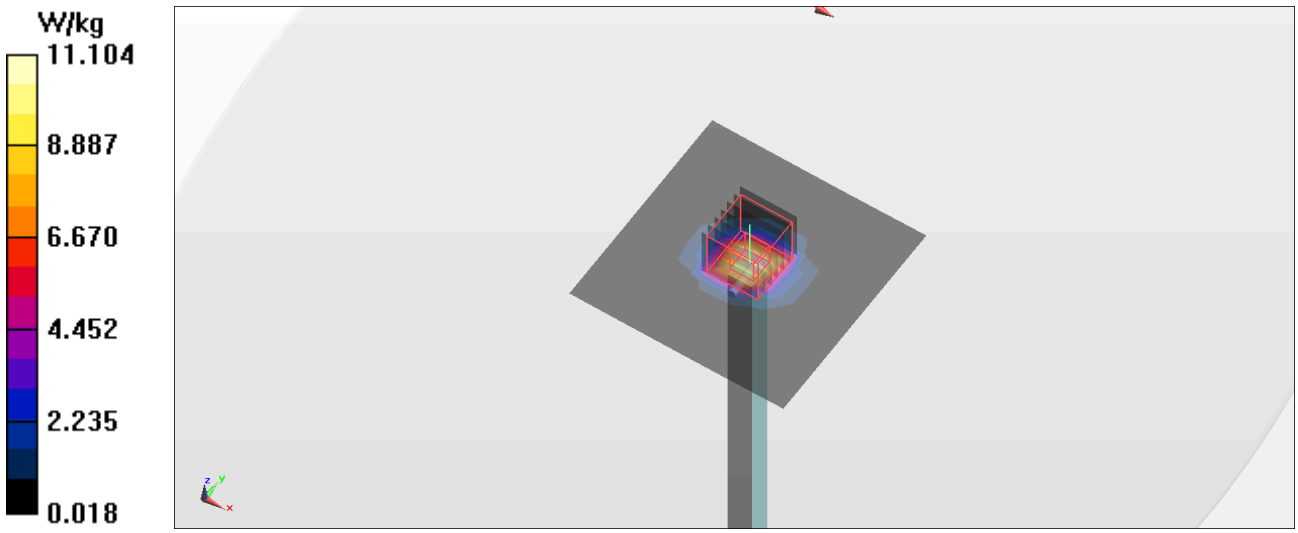

Test Laboratory: TUV Inc. Date: 2026/8/4

System Check_HSL5600MHz

DUT: D5GHzV2 - SN1235

Communication System: UID 0, CW; Frequency: 5600 MHz; Duty Cycle: 1:1
Medium: HSL5G_260804 Medium parameters used: f = 5600 MHz; σ = 4.953 S/m; ε_r = 35.254; ρ = 1000 kg/m^3
Ambient Temperature：23.6 ℃;Liquid Temperature：22.1℃

DASY Configuration:

- Electronics: DAE4 Sn855; Calibrated: 2026/4/20
- Probe: EX3DV4 - SN7400; ConvF(4.67, 4.61, 5.39) @ 5600 MHz; Calibrated: 2026/4/23
- Sensor-Surface: 1.4mm (Mechanical Surface Detection), z = -9.0, 23.0
- Phantom: ELI V5.0 (20deg probe tilt); Type: QD OVA 002 AA; Serial: 1153
- DASY52 52.10.4(1535); SEMCAD X 14.6.14(7501)

Pin=100mW/Area Scan (10x10x1): Measurement grid: dx=10mm, dy=10mm
Maximum value of SAR (measured) = 12.1 W/kg

Pin=100mW/Zoom Scan (7x7x7)/Cube 0: Measurement grid: dx=4mm, dy=4mm, dz=1.4mm
Reference Value = 69.86 V/m; Power Drift = -0.07 dB
Peak SAR (extrapolated) = 38.2 W/kg
SAR(1 g) = 7.59 W/kg; SAR(10 g) = 2.13 W/kg
Maximum value of SAR (measured) = 20.5 W/kg

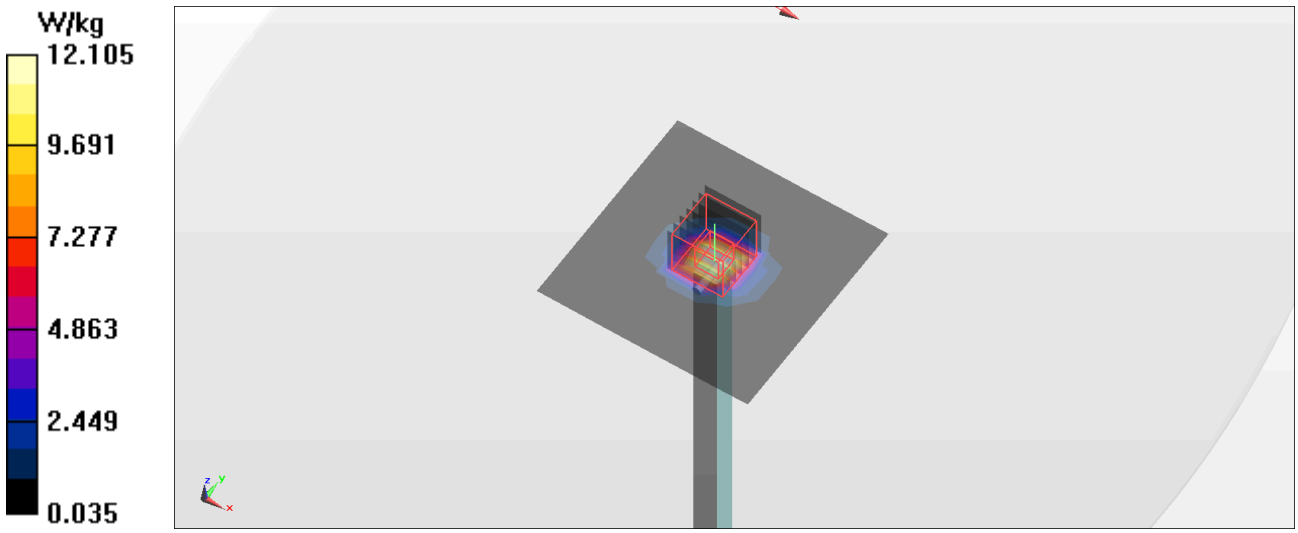

Test Laboratory: TUV Inc. Date: 2026/8/4

System Check_HSL5750MHz

DUT: D5GHzV2 - SN1235

Communication System: UID 0, CW; Frequency: 5750 MHz; Duty Cycle: 1:1
Medium: HSL5G_260804 Medium parameters used: f = 5750 MHz; σ = 5.127 S/m; ε_r = 34.97; ρ = 1000 kg/m^3
Ambient Temperature：23.6 ℃;Liquid Temperature：22.1℃

DASY Configuration:

- Electronics: DAE4 Sn855; Calibrated: 2026/4/20
- Probe: EX3DV4 - SN7400; ConvF(4.73, 4.67, 5.47) @ 5750 MHz; Calibrated: 2026/4/23
- Sensor-Surface: 1.4mm (Mechanical Surface Detection), z = -9.0, 23.0
- Phantom: ELI V5.0 (20deg probe tilt); Type: QD OVA 002 AA; Serial: 1153
- DASY52 52.10.4(1535); SEMCAD X 14.6.14(7501)

Pin=100mW/Area Scan (10x10x1): Measurement grid: dx=10mm, dy=10mm
Maximum value of SAR (measured) = 12.3 W/kg
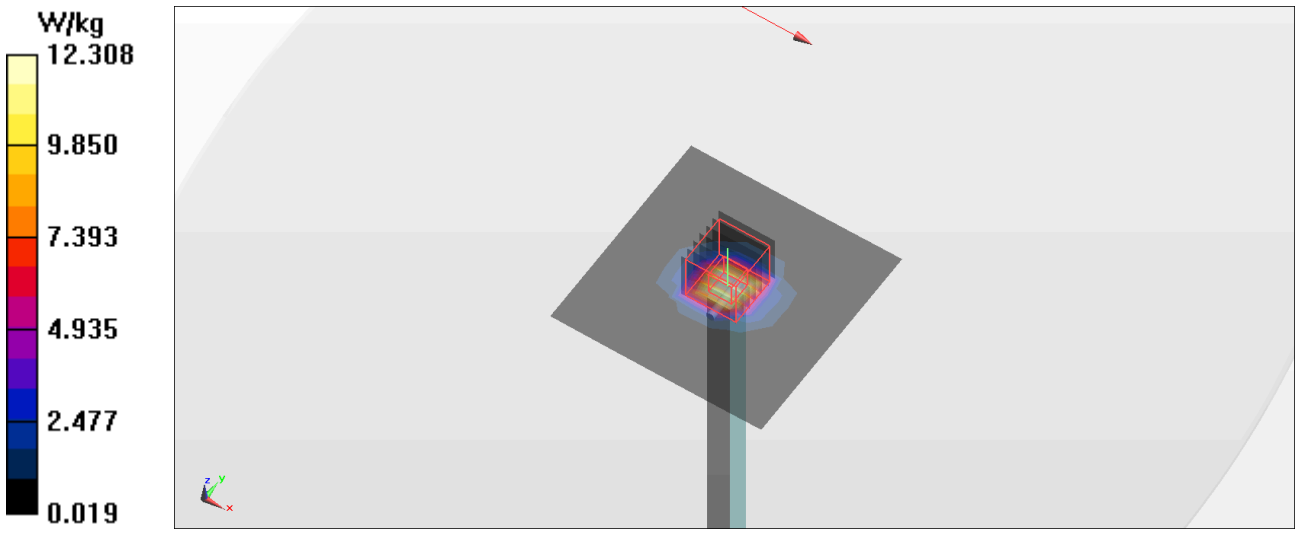
Pin=100mW/Zoom Scan (7x7x7)/Cube 0: Measurement grid: dx=4mm, dy=4mm, dz=1.4mm
Reference Value = 69.28 V/m; Power Drift = -0.14 dB
Peak SAR (extrapolated) = 40.3 W/kg
SAR(1 g) = 7.64 W/kg; SAR(10 g) = 2.14 W/kg
Maximum value of SAR (measured) = 21.0 W/kg