ergoline

MOVING TO HEALTH

ers2 – 1-Channel ECG Telemetry System

System Manual

201000401000 • Version 2020-09-24 / Rev 04 • English

Manual

ers2 – 1-Channel ECG Telemetry System

System Manual

201000401000 • Version 2020-09-24 / Rev 04 • English

This manual contains the instructions for use and the technical specifications of the ers2 – 1-Channel ECG Telemetry System. It was written with the utmost care. Should you nonetheless find details that do not correspond with the hardware or software, please let us know and we will correct the issue as soon as possible.

We reserve the right to modify the design and technical features of the device and are not bound by the information and illustrations provided in this manual.

All trademarks appearing in this document are trademarks of their respective owners. Their protection is acknowledged.

No part of this manual may be reprinted, translated or reproduced without the manufacturer's written permission.

This manual will not be automatically updated. Please contact the manufacturer for the latest document revision.

Manufacturer	Distributor

ergoline GmbH
Lindenstrasse 5
72475 Bitz
Germany

Tel.: +49-(0)-7431 - 9894 - 0
Fax: +49-(0)-7431 - 9894 - 128
e-mail: info@ergoline.com
http: www.ergoline.com

Contents

1 General Notes 7
1.1 General Information 7

2 Definitions 9
2.1 Meaning of the Signal Words 9
2.2 Intended Use 10
2.2.1 User Characterization 10
2.2.2 Patient Characterization 11
2.2.3 Characterization of the Environment of Use 11
2.2.4 Essential Performance 11
2.3 Provisions and Safety Information 12
2.3.1 Safety Information 12
2.3.2 System and Data Security 15
2.3.3 EMS/EMC/RF Warning 15
2.3.4 Biocompatibility 16
2.4 Responsibility of the Manufacturer 16
2.5 Symbols 17

3 Components 20
3.1 Information on Product and Packaging 20
3.1.1 Unique Device Identification (UDI) 23
3.2 1-Channel Transmitter 23
3.2.1 Normal Operation Mode 24
3.2.2 Firmware Update 24
3.3 Receiver 25
3.4 Chest Belt 26
3.5 Adapter 27

4 Start-up and Preparation 28
4.1 Receiver 28
4.2 1-Channel Transmitter 29
4.2.1 Replacing the Battery of the 1-Channel Transmitter 30
4.2.2 Battery Management of the 1-Channel Transmitter 31

5 Attaching the ECG System to the Patient 32
5.1 Visual Inspection of the ECG System 32
5.2 Applying the 1-Channel Transmitter and Chest Belt 33
5.2.1 Applying the Chest Belt 34
5.2.2 Attaching and Switching On the 1-Channel Transmitter 35
5.2.3 Removing the 1-Channel Transmitter and Chest Belt 36
5.3 Applying the 1-Channel Transmitter and Adapter 36
5.3.1 Attaching and Switching On the 1-Channel Transmitter 37
5.3.2 Applying Adhesive Electrodes 37
5.3.3 Attaching the Adapter with the 1-Channel Transmitter to the Patient . . . 37
5.3.4 Removing the Adapter with the 1-Channel Transmitter from the Patient . 38

6 Cleaning and Disinfection Instructions. 39
6.1 1-Channel Transmitter 39
6.1.1 Cleaning 39
6.1.2 Disinfection 40
6.2 Adapter 40
6.2.1 Cleaning 40
6.2.2 Disinfection 40
6.3 Chest Belt 41
6.3.1 Cleaning and Disinfection 41
6.4 Receiver 41
6.4.1 Cleaning 41

7 Maintenance Information 42
7.1 Maintenance Requirement 42
7.1.1 Warranty Information 43
7.2 Functional Test 43
7.3 Firmware Update 44
7.4 Troubleshooting 44

8 Disposal 45

9 Technical Specifications. 46
9.1 1-Channel Transmitter 46
9.1.1 General Data 46
9.1.2 Electronic System 46
9.1.3 Environment 47
9.1.4 Bluetooth Module 47
9.1.5 Mechanical Data 47
9.2 Application Software ers2 48
9.3 Receiver 48
9.3.1 Summary 48
9.4 Chest Belt 49
9.4.1 Summary 49
9.4.2 Dimensions 50
9.5 Adaptor 50
9.5.1 Summary 50
9.5.2 Dimensions 51

10 Electromagnetic Compatibility (EMC) DIN EN 60601-1-2 52

Revision History

The part number of the document and the revision code are indicated in the footer of each page. The revision code identifies the revision status of the document. The table below provides a summary of the document revision history.

Publication Date	Revision	Software Version	Comment/Note
2015-02-15	00		– initial release
2015-10-22	01	– ers2 software version 1.4 and later – telemetry firmware version < 5.0	– general adaptations
2016-07-19	02	– ers2 software version 1.4 and later – telemetry firmware version < 5.0	– added ECG system information – added information to technical data – update of intended use information
2019-02-19	03	– ers2 software version 2.00 and later – telemetry firmware version 5.0 and later – ECG telemetry transmitter hardware version STR12 and later	– added new firmware functionalities – added ECG chest belt information – added ECG system maintenance information – update of intended use information – added ECG use warning – added cybersecurity information – added ECG electrode adapter information
2020-09-24	04	– ers2 software version 2.00 and later – telemetry firmware version 5.0 and later – ECG telemetry transmitter hardware version STR12 and later	– implementation of MDR compliant content and design

1 General Notes

WARNING	**No pacemaker detection** There is a risk of inadequate therapy and/or over-exertion. The 1-channel system may continue to count the pacemaker rate during cardiac arrest or some arrhythmias. Do not rely entirely upon rate meter alarms. The 1-channel transmitter has no pacemaker pulse rejection capability. Keep pacemaker patients under close surveillance. The primary user is required to periodically assess the current exertion level by referring to independent, subjective parameters (e.g., the RPE value).
CAUTION	**Prescription device** Please note that US Federal Law restricts this ECG system to be used by a physician or on the order of a physician.

This manual describes the ers2 ECG system and is geared for the primary and secondary users of these devices. The ECG system is intended for use with a medical application software or ME equipment.

The ECG system is intended for use with the ergoline rehabilitation software (ers2) among others. The software processes the acquired ECG signal, saves it, and uses it to continuously monitor and document the heart rate and the cardiac rhythm and to control the training load for rehabilitation or preventive training activities of adult patients. For the relevant wireless connections and special functional tests, refer to the instructions for use of the application software.

If you intend to use the ECG system with a software not expressly approved by ergoline, please contact the manufacturer of this software for information on installation, configuration, and possible restrictions.

1.1 General Information

This manual is an integral part of the device. It should be kept near the device at all times.

This manual provides the necessary information for safe transport and storage, setup and safe operation in compliance with its function and as defined by its intended use. This system manual is not a substitute for in-depth product training, it should rather be considered as a supplement.

The symbol means: Follow instructions in accompanying documents.
It indicates points that are of particular importance in the application of the device.

The manual reflects the device specifications and applicable safety standards valid at the time of printing. All rights are reserved for devices, circuits, techniques, software programs, and names appearing in this manual.

The CE mark and the CE approval number 0123 indicate that the device is in conformity with the applicable rules and requirements set out in Regulation (EU) 2017/745.

It is an active class IIa device for "transient" use on patients.

The device has been certified with respect to electric shock, fire, mechanical hazards, electromagnetic compatibility, and signal accuracy in accordance with IEC 60601-1, IEC 60601-1-2, and IEC 60601-2-27.

The implemented quality management system covers all aspects of the ergoline GmbH operations as per EN ISO 13485.

All the cleaning and disinfection procedures described in this manual need to be carried out.

The assembly of ME systems and modifications during their actual operating life require the verification of compliance with the requirements for electrical safety and of the essential performance.

The manufacturer and the competent authority of the member state where this ECG system is used must be notified of all serious incidents involving the system which directly or indirectly led or may lead to death or serious deterioration in the health of a patient.

2 Definitions

The following terms are used in this document.

ergoline	English
ETS	ECG system
ETS1	1-channel system
ETS1 Transmitter	1-channel transmitter
ETS1 Adapter	adapter
ETS1 Chestbelt	chest belt
ETS Receiver	receiver

2.1 Meaning of the Signal Words

Risk is defined as a source of potential injury to a person or property damage.

The terms "Danger", "Warning", Caution", and "Notice" are used throughout this manual to point out risks and to designate a degree or level of seriousness. Familiarize yourself with the following definitions:

Signal Word	Meaning
DANGER	Indicates an imminent risk that, if not avoided, can result in death or serious injury. (Not used in this manual.)
WARNING	Indicates a potential risk or unsafe practice that, if not avoided, can result in death or serious injury.
CAUTION	Indicates a potential risk or unsafe practice that, if not avoided, can result in minor or moderate injury.
NOTICE	Indicates a potential risk or unsafe practice that, if not avoided, can result in product or property damage or loss of data.

2.2 Intended Use

The 1-channel system is a device for recording of a single-channel, bipolar surface ECG (frontal plane) acquired with two ECG electrodes. The ECG is transmitted to another ME device or a medical application software that processes it to continuously monitor and document the heart rate and the cardiac rhythm and to control the training load for rehabilitation or preventive training activities.

The signal is acquired on the intact skin of adult patients.

The medical device is intended for use in professional healthcare institutions for inpatient and outpatient care.

2.2.1 User Characterization

2.2.1.1 Primary Users

User Group:	Primary Users
Typical professional title(s):	Cardiologist, sports therapist, physiotherapist, nurse
Expected education (formation, degree, training):	Three-year professional education and training
Expected professional experience (related to the product, similar products or IT in general):	No product-specific professional experience required, specified education is sufficient
Core task (related to the medical device):	Prepare patient for ECG monitoring, perform follow-up tasks (cleaning, disinfection) Replace battery of 1-channel transmitter
Equipment (typically used to perform the tasks):	Application software, ECG system, ECG electrodes
Expected training (related to the medical device):	Approx. 30 minutes of training encompassing application of the device and patient preparation

2.2.1.2 Secondary Users

User Group:	Secondary Users
Typical professional title(s):	Biomedical technician, application specialist
Expected education (formation, degree, training):	Three-year professional education and training, training by manufacturer
Expected professional experience (related to the product, similar products or IT in general):	No product-specific professional experience required, specified education is sufficient
Core tasks (related to the medical device):	Training of primary users, firmware update of the 1-channel transmitter, functional and safety checks

Equipment (typically used to perform the tasks):	Application software, ECG maintenance software, ECG simulator
Expected training (related to the medical device):	One 1-hour training session by manufacturer

2.2.2 Patient Characterization

Indications

- Adult patients whose electrical activity of the heart needs to be continuously monitored to control the training sessions.

Contraindications

- The general, absolute contraindications to cardiac stress testing (according to the ergometry guidelines, DGSP (German Sports Physicians Association)) apply.
  - Acute myocardial infarction
  - Unstable angina
  - Cardiac arrhythmia causing symptoms and/or hemodynamic instability
  - Symptomatic severe aortic stenosis
  - Decompensated heart failure
  - Acute pulmonary embolism
  - Acute myocarditis
  - Acute pericarditis
  - Acute aortic dissection
- Patients with physical, psychological, or mental afflictions who cannot be mobilized and are therefore not capable of using rehabilitation facilities.

Application

- Applied parts are only used on healthy, intact skin.
- The application is transient (less than 60 minutes under normal conditions), cumulative use for 20 training sessions.

2.2.3 Characterization of the Environment of Use

The ECG system is intended for use in medical training therapy for inpatient and outpatient care in professional healthcare institutions.

2.2.4 Essential Performance

The 1-channel system fulfills the applicable requirements of IEC 60601-2-27 for the essential performance of electrocardiographic monitoring equipment regarding signal accuracy and protection against the effects of defibrillation. As defined by its intended purpose, the device can be used to monitor the cardiac rhythm and calculate the heart rate during training units in rehabilitation therapy.

2.3 Provisions and Safety Information

This section contains information on the safe use of the system and on observance of legal regulations. Familiarize yourself with this information. Read and understand all instructions before attempting to use this system.

Any failure to observe the safety information contained herein is considered improper use of the system, which may lead to injuries, loss of data and may render the warranty null and void.

2.3.1 Safety Information

The following safety information refers to the system as a whole. Specific safety information may be presented in other sections of this manual.

Safety	Text
WARNING	**No monitoring device** There is a risk of life-threatening patient conditions going unnoticed. The ECG system is not suitable for the electrocardiographic monitoring of critical care patients.
WARNING	**No pacemaker detection** There is a risk of inadequate therapy and/or over-exertion. The 1-channel system may continue to count the pacemaker rate during cardiac arrest or some arrhythmias. Do not rely entirely upon rate meter alarms. The 1-channel transmitter has no pacemaker pulse rejection capability. Keep pacemaker patients under close surveillance. The primary user is required to periodically assess the current exertion level by referring to independent, subjective parameters (e.g., the RPE value).
WARNING	**Conductive materials** Electric shocks or malfunction of the ECG system may result from contact with conductive materials. Conductive parts of the ECG system must not touch other conductive parts, including ground, during application to or removal from the patient. Follow the sequence of steps for application and removal of the ECG system described in this manual.
WARNING	**Visual inspection before use** Before each use, visually inspect the ECG system for signs of damage. If you detect damage that may result in a hazard to the patient or the operator, the ECG system must be repaired before it can be used again. Follow the instructions for visual inspection given in this manual.
WARNING	**Defibrillation protection** To ensure defibrillation protection, use only the electrodes, leadwires, and patient cables with the 1-channel transmitter specified by the manufacturer. When a defibrillation shock was delivered, all components must be inspected by a certified ergoline service partner for possible damage.
WARNING	**Compatibility** Safe and reliable operation of the ECG system is only possible when ergoline has declared the devices connected to the ECG system to be part of the ECG system or compatible with the ECG system.
CAUTION	**Incorrect application** The ECG system is not intended for long-term monitoring. Skin irritation and/or allergies may occur. Apply the ECG system only as described in this manual.

CAUTION	**Insufficient ECG transmission quality** Line isolation monitor transients may resemble actual cardiac waveforms and thus inhibit heart rate alarms. This problem can be largely avoided by correct application of the chest belt and/or adapter. Regularly check the 1-channel transmitter for correct application to the chest belt or adapter and patient according to the instructions in this manual.
CAUTION	**Risk of infection** After use, the ECG system may be contaminated with bacteria or viruses. Clean and disinfect the 1-channel transmitter and the applied parts according to the cleaning and disinfection instructions in this manual.
CAUTION	**Prescription device** Please note that US Federal Law restricts this ECG system to be used by a physician or on the order of a physician.
CAUTION	**Risk of infection** The ECG system may only be applied on intact skin (e.g., not over open wounds, lesions, infected or inflamed areas).
CAUTION	**Wet environment** There is a risk of burn injuries and insufficient ECG transmission quality. The ECG system is not suitable for use in highly wet environments. Do not wear it in the shower or when swimming.
CAUTION	**MR Unsafe** • There is a risk of injuries from ferromagnetic objects being attracted by the magnetic core of the MRI system (missile effect). • Thermal injury and burns may occur due to metal components of the device heating up during MR scanning. • The system may generate artifacts in the MR image. • The system may not function properly due to the strong magnetic and radiofrequency fields generated by the MR scanner. • It is not permitted to use the ECG system in the vicinity of an MR scanner.
CAUTION	**Electrosurgery** There is a risk of skin burns and patient injuries. It is not permitted to use the ECG system during electrosurgery.
CAUTION	**No diagnostic device** There is a risk of inadequate or wrong therapy. The ECG system is not intended for use as a tool to diagnose cardiac conditions (e.g., arrhythmias, ST elevation, etc.). Apply the ECG system only as described in this manual.
CAUTION	**Compulsory presence of a primary user** There is a risk of wrong or missing ECG data leading to inadequate therapy and/or over-exertion. The ECG system may only be used with patients when the primary user is present. The primary user is required to periodically assess the current exertion level by referring to independent, subjective parameters (e.g., the RPE value).
CAUTION	**Installation and instruction obligation** Incorrect installation or training may lead to wrong application of the ECG system. The ECG system may only be used if properly installed by a certified ergoline partner and after the user has been instructed by the certified ergoline partner.

NOTICE	**Cleaning and disinfection** Wrong cleaning agents or disinfectants or wrong application of these substances may damage the ECG system. Use the recommended cleaning agents and disinfectants for cleaning and disinfection. Clean and disinfect your ECG system according to the instructions in this manual.
NOTICE	**Maintenance** Proper maintenance by the secondary user is a primary condition for long-term safety and reliability of the ECG system. Observe the maintenance information in this manual.
NOTICE	**Damage to device and accessories** Unauthorized personnel is not adequately trained and educated to properly maintain the device. Repairs carried out by unauthorized personnel may damage the ECG system. Inform your ergoline service partner when you identify or suspect a malfunction.
NOTICE	**Safety only with approved accessories/applied parts** Safe and reliable operation of the ECG system is only possible when the supplied or approved applied parts or accessories are used. Observe the appropriate instructions in this manual and the instructions supplied with the applied parts and accessories.
NOTICE	**Environmental impact** Electronic devices and the accessories contain metal and plastic parts. After the expiration of their useful life, the parts must be disposed of in compliance with the valid waste regulations to prevent any environmental impact. Once the service life of the ECG system has expired, it must be disposed of in compliance with the applicable local and national provisions. If you have any questions about the disposal of the device, please contact ergoline or one of the authorized ergoline representatives.

2.3.2 System and Data Security

Medical device security is a shared responsibility between all stakeholders. These are healthcare facilities, patients, employees, and manufacturers of medical devices. Failure to maintain cyber-security can result in compromised device functionality, loss of data (medical or personal) availability or integrity, or expose other connected devices or networks to security threats.

NOTICE	**Protection from unauthorized access** Lock the 1-channel transmitter in a cabinet when not in use.
NOTICE	**Protection from unauthorized access** Switch off the 1-channel transmitter if not used for long periods of time.
NOTICE	**Protection from unauthorized access** Inform your ergoline service partner if a 1-channel transmitter is stolen or lost.

2.3.3 EMS/EMC/RF Warning

The ECG system is designed to comply with applicable regulations regarding EMC (electromagnetic compatibility). Its compliance with these requirements has been verified. Changes or modifications to this system not expressly approved by ergoline could cause EMC issues with this or other equipment. RF devices may adversely affect the usability or accuracy of the device or system. During installation and use of the device or system, known RF sources in the vicinity need to be taken into account. These sources include:

- Radio and TV stations
- Portable and mobile radio communication equipment (cell phones, radios)
- X-ray, CT, or MRI equipment

These devices are possible sources of interference as they may emit higher levels of electromagnetic radiation.

WARNING	**Malfunction of the ECG system** Use of portable telephones or other RF devices near the ECG system may cause unexpected or adverse operation. Do not use portable telephones or other RF devices near the ECG system.
WARNING	**Accessories or components** Adding accessories or components to the ECG system or modifying the device or system may result in increased emissions or decreased electromagnetic immunity of the device or system. More information on EMS/EMC and RF can be obtained from these sources: Appendix "Electromagnetic Compatibility" in this system manual.
NOTICE	**This device complies with part 15 of the FCC rules** Operation is subject to the following two conditions: (1) This device may not cause harmful interference, and (2) this device must accept any interference received, including interference that may cause undesired operation.
NOTICE	Changes or modifications made to this device not expressly authorized by ergoline GmbH may void the FCC authorization to operate this device.
NOTICE	**Information about exposure to radiofrequency emitted by radiation** The radiated output power of the device is far below the FCC limits for RF emissions. However, any potential human contact during normal operation of the device should be considered and reduced to a minimum.

NOTICE	This equipment has been tested and found to comply with the limits for a Class B digital device, pursuant to part 15 of the FCC Rules. These limits are designed to provide reasonable protection against harmful interference in a residential installation. This device generates, uses and can radiate radiofrequency energy and, if not installed and used in accordance with the instructions, may cause harmful interference to radio communications. However, there is no guarantee that interference will not occur in a particular installation. If this device causes harmful interference to radio or television reception, which can be determined by turning the device off and on, the user is encouraged to try to correct the interference by one or more of the following measures • Reorienting or relocating the receiving antenna. • Increase the distance between the device and the receiver.

2.3.4 Biocompatibility

The system components described in these instructions for use, including accessories, that come into contact with the patient during the intended use, meet the biocompatibility requirements of the applicable standards. If you have questions in this matter, please contact ergoline or one of their representatives.

2.4 Responsibility of the Manufacturer

The manufacturer is responsible for the results with respect to safety, reliability and performance only if the following conditions are met:

- Assembly operations, extensions, readjustments, modifications or repairs are carried out by persons authorized by ergoline.
- The electrical installation of the relevant room complies with the requirements of the applicable standards.
- The system is used in accordance with the operator's manual.
- Information is obtained from ergoline before any devices not recommended in this manual are connected to the equipment.

2.5 Symbols

The following symbols may be used on the device or on the system packaging. Knowledge of these symbols contributes to the safe application and disposal of the equipment.

Symbol	Meaning
REF	Catalog or part number Indicates the manufacturer's catalog or part number.
SN	Serial number Indicates the manufacturer's serial number.
LOT	Batch code Indicates products from the same delivery.
	Manufacturer, name and address Indicates the device manufacturer's name and address.
	Date of manufacture (year) Indicates the original year of manufacture of the device.
	Type CF applied part, defibrillation-proof Identifies a defibrillation-proof, type CF applied part of medical equipment that meets the requirements of the standard EN IEC 60601–1. This device fulfills the requirements for protection against electric shock for a non-grounded (floating) applied part intended for direct cardiac application.
IP42	International Protection Code (Ingress Protection Rating) Classifies and evaluates the protection of the 1-channel transmitter against ingress of solid foreign objects (such as hands and fingers, dust, unintentional contact) and liquids. The first digit (4) indicates the protection against solid foreign objects: in this case the protection against ingress of objects with a diameter of 1.0 mm and more. The second digit (2) indicates the protection against ingress of liquids: in this case the protection against vertically falling drops when the enclosure is tilted at an angle up to 15° from its normal position. ATTENTION **The protection rating applies only to the following condition:** IP42 applies only when the battery cover of the 1-channel transmitter is closed. Before starting a recording and before cleaning and disinfecting the device, make sure that the battery compartment is properly closed.
IP20	International Protection Code (Ingress Protection Rating) Classifies and evaluates the protection of the receiver against ingress of solid foreign objects (such as hands and fingers, dust, unintentional contact) and liquids. The first digit (2) indicates the protection against solid foreign objects: in this case the protection against ingress of objects with a diameter of 12.5 mm and more. The second digit (0) indicates the protection against ingress of liquids: in this case no protection.
	Protection class II equipment. Indicates that the receiver is a protection class II device.

	This side up Indicates the correct position of the 1-channel transmitter on the adapter.
	MR Unsafe Indicates that the ECG system must not be used in the vicinity of MR scanners.
	Correct washing at 40°C Indicates that the maximum washing temperature for the chest belt is 40°C.
	Do not tumble dry Indicates that the chest belt must not be tumble dried after washing.
	Do not bleach Indicates that the chest belt must not be bleached.
	Do not dry clean Indicates that the chest belt must not be dry cleaned.
	Do not iron Indicates that the chest belt must not be ironed.
Size:	Indicates the size of the chest belt.
	FCC Approval (USA only) Indicates that the 1-channel transmitter and the receiver comply with part 15 of the FCC rules. Operation is subject to the following two conditions: (1) This device may not cause harmful interference, and (2) this device must accept any interference received, including interference that may cause undesired operation.
	Follow instructions in accompanying documents Read and understand the instructions for use before using the device or product. This is a "mandatory sign" identified by a white symbol on a blue background.
Rx Only	Rx Only Please note that US Federal Law restricts the device to be used by a physician or on the order of a physician.
	QR code Readable with a QR code reader. Provides the following information: serial number or lot (batch) number, UDI number, and date of manufacture.
	Caution Consult accompanying documents. There may be special warnings or precautions for the device that are not printed on the label. For further information on the safe use of the device, refer to the supplied documentation.

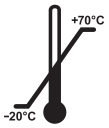	Temperature limits Indicates the temperature limits for transport, storage, and handling of the package. The limit values are indicated next to the upper and lower horizontal lines.
	Disposal of electric devices Indicates that this system contains electric or electronic components that must be collected and disposed of separately from household waste. For information about disposal of the device, please contact an authorized representative of the manufacturer.
	Fragile Indicates that the content is fragile. Handle with care.
	Keep dry Indicates that the product package needs to be protected from rain and other sources of moisture.
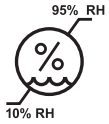	Air humidity limitations Indicates the upper and lower limits of air humidity. The limit values are indicated next to the upper and lower horizontal lines.
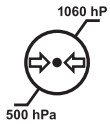	Atmospheric pressure limits Indicates the upper and lower atmospheric pressure limits. The limit values are indicated next to the upper and lower horizontal lines.
CE 0123	CE marking The CE mark and the CE approval number 0123 indicate that the device is in conformity with the applicable rules and requirements set out in Regulation (EU) 2017/745 of the European Parliament and the Council, and with Annex 2 in particular.
	On/Off button Pressing the On/Off button switches the 1-channel transmitter on and off in the current operating mode.

3 Components

NOTICE	**Safety only with approved accessories/applied parts** Safe and reliable operation of the ECG system is only possible when the supplied or approved applied parts or accessories are used. Observe the appropriate instructions in this manual and the instructions supplied with the applied parts and accessories.

The ECG system is provided as 1-channel transmitter kits with different contents. If a packaging unit is damaged, please inform your ergoline service partner.

Scope of supply: 1-channel transmitter kit (adapter)
- 1-channel transmitter
- Adapter

Scope of supply: 1-channel transmitter kit (chest belt)
- 1-channel transmitter
- Chest belt

Scope of supply: receiver
- The receiver is an individually packaged item.

Information on consumables, spare parts, and accessories

Spare parts and consumables can be ordered directly from ergoline or from the certified ergoline service partner with the order information provided below:

- Cover of battery compartment and sealing ring (erg705.696)
  Spare part; if defective cover of battery compartment or defective sealing ring is identified during visual inspection. Replacement by primary user.

- Chest belt (erg705.693)
  Spare part; if a defect is identified during visual inspection. Replacement by primary user.

- Adapter (erg161.831)
  Spare part; if a defect is identified during visual inspection. Replacement by primary user.

3.1 Information on Product and Packaging

This section describes the labels and type plates used on the device and its packaging. Each ergoline device has a type plate that bears the product designation, part number, manufacturer information, and unique serial number or batch number. You will need this information when contacting the ergoline service team.

Picture	Label	Location
	ers2 1CH ECG Transmitter ergoline GmbH CE 0123 D-72475 Bitz REF 161847 RX Only IP42 FCC ID: 2AWLEETS1	Type plate Back of the 1-channel transmitter
	ers2 1CH ECG Adapter REF 161836 Rx Only LOT 20208175680851 ergoline GmbH D-72475 Bitz	Type plate Inside of the adapter
	ergoline 40 LOT 900624 Made in China ers2 1CH ECG Chestbelt size: M GTIN 04059358001913 RX Only	Type plate Sewed on elastic chest belt
	ers2 ECG Receiver REF 161835 SN 2020210999 CE 0123 RX Only IP20 2020-06-10 ergoline GmbH D-72475 Bitz Contains FCC ID: QOQWT41u	Type plate Underside of the receiver

		Label Package containing 1-channel transmitter kit (chest belt)
		Label Package containing 1-channel transmitter kit (adapter)
		Label Package containing receiver
		Label of individually packaged adapter (within kit)
	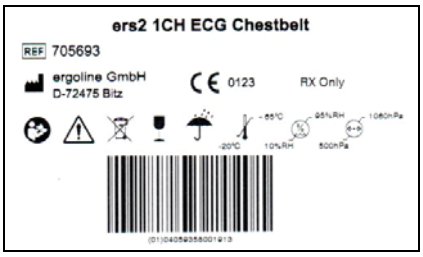	Label of individually packaged chest belt (within kit)

3.1.1 Unique Device Identification (UDI)

The *Unique Device Identification (UDI)* system is a globally harmonized system for the identification of medical devices in machine-readable form.

The following UDI information for each component of the ECG system is saved in the form of a bar code on the respective type plates. This bar code can be read with an appropriate reading device (e.g., a cell phone). The code will then be displayed on the cell phone:

Code structure:

1-channel transmitter, receiver

01 xxxxxxxxxxxxxx 11 xxxxxx 21 xxxxxxxxxx

Adapter

01 xxxxxxxxxxxxxx 10 xxxxxxxxxxxxx

ID	Name	Description
01	UDI basic DI	14-digit primary identification of the device model (all components)
11	UDI PI	6-digit date of manufacture, YYMMDD format (1-channel transmitter, receiver)
21	UDI PI	10-digit serial number (1-channel transmitter, receiver)
10	UDI PI	13-digit lot or batch number (adapter)

3.2 1-Channel Transmitter

Via the applied part, the 1-channel transmitter acquires a single-channel, bipolar raw ECG signal and sends it to a medical application software or other ME equipment by radio transmission. The 1-channel transmitter is a type CF, defibrillation-proof applied part.

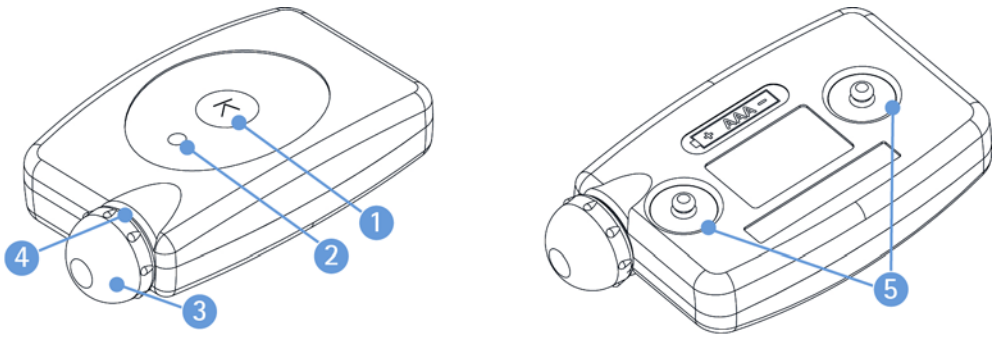

Operating controls
1 On/Off button

Front view
2 Function indicator LED
3 Battery cover
4 Rubber sealing ring

Rear view
5 Snap fastener interface

3.2.1 Normal Operation Mode

The primary user operates the 1-channel transmitter in normal mode.

On/Off button and function indicator LED

These are the functions of the button and function indicator LED in normal mode:

Operation	LED Status	Operating Status
Switching ON to normal operation mode • Press On/Off button for less than 30 seconds and release	LED is illuminated while button is held down	Transmitter ON, initializing
Wait for connection	LED continuously flashing twice	Transmitter waiting for connection in normal operation mode
Normal mode	LED continuously flashing once	Transmitter connected in normal operation mode
Low battery voltage in normal operation mode • Replace battery	LED continuously flashing three times	Low battery voltage, no connection possible
Switching OFF 1. Press On/Off button until status LED is permanently lit 2. Release On/Off button	1. LED continuously flashing in previous mode 2. LED permanently lit 3. LED off	1. Transmitter shuts down 2. Transmitter ready for switch-off 3. Transmitter OFF

3.2.2 Firmware Update

The secondary user operates the 1-channel transmitter in the firmware update mode.

On/Off button and function indicator LED

These are the functions of the button and function indicator LED in the firmware update mode:

Operation	LED Status	Operating Status
Switching on to firmware update mode • Press On/Off button for more than 30 seconds and release	LED is illuminated while button is held down	Initializing
Wait for connection	LED continuously flashing (3 short blinks and 2 long blinks)	Transmitter waiting for connection in firmware update mode
Firmware update mode	LED continuously flashing (3 short blinks and 1 long blink)	Transmitter connected in firmware update mode
Low battery voltage in firmware update mode	LED continuously flashing (3 short blinks and 3 long blinks)	Low battery voltage, no connection possible
Switching OFF 1. Press On/Off button until status LED is permanently lit 2. Release On/Off button	1. LED continuously flashing in previous mode 2. LED permanently lit 3. LED OFF	1. Transmitter shuts down 2. Transmitter ready for switch-off 3. Transmitter OFF

3.3 Receiver

The receiver, connected to a PC via USB, receives the ECG signals sent by the 1-channel transmitter by radio transmission. A receiver can connect to a maximum of six 1-channel transmitters.

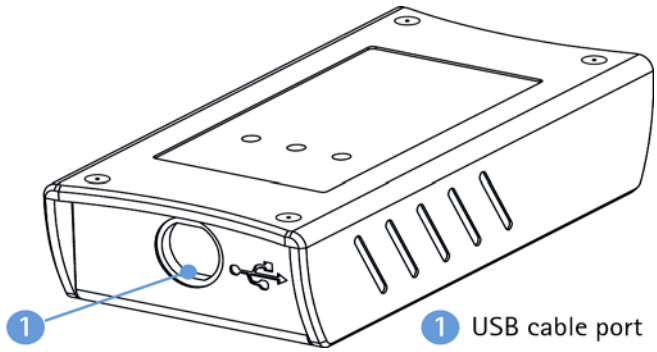

Operating controls
- USB cable port

Front view
- Indicator LED: ON/OFF – status
- Function LEDs S1 and S2

Rear view
- Threaded inserts for installation

Function LEDs

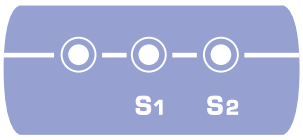

LED Indicator		Operating Status
1	Power supply	LED on = receiver ON, powered via USB LED off = receiver OFF, no power supply via USB
2	S1	LED on = receiver ready for connection to transmitter LED off = receiver not ready for connection
3	S2	LED on = receiver is connected to at least one transmitter LED off = receiver is not connected to any transmitter

3.4 Chest Belt

Intended use

The chest belt conducts the ECG signal acquired by two dry electrodes on the skin surface to the attached 1-channel transmitter. The chest belt is intended for short-term use on intact skin of adult patients. The chest belt is used for telemetric monitoring in rehabilitation programs. The device is non-critical and supplied non-sterile for single-patient use. This means it may be reused on the same patient if cleaned according to instructions.

The elastic textile chest belt contains two integrated dry conductive polymer electrodes. The textile chest belt is attached to the 1-channel transmitter by means of snap fasteners. A clasp and loop are provided on the end of the belt for fitting the belt to the body. Different belt lengths can be adjusted by means of the buckle.

The chest belt is a type CF, defibrillation-proof applied part.

Product description

Front

1. Clasp
2. Belt loop
3. Belt buckle
4. Snap fastener interface for connection to the 1-channel transmitter

Back

3.5 Adapter

Intended use

The adapter is used to conduct the ECG signal via two ECG leadwires connected to commercially available ECG monitoring electrodes from the surface of the skin to the attached ergoline 1-channel transmitter. The adapter is intended for use on intact skin of adult patients for an extended period of time.

It is used for ECG monitoring in rehabilitation programs. The device is non-critical and supplied non-sterile. This means it may be reused on the same patient if cleaned and disinfected according to instructions.

The adapter has two ECG leadwires integrated into the cradle. The cradle is attached to the 1-channel transmitter by means of snap fasteners. The patient wears the adapter on a neckband whose length can be adjusted with the cord stopper.

The adapter is a type CF, defibrillation-proof applied part.

Product Description

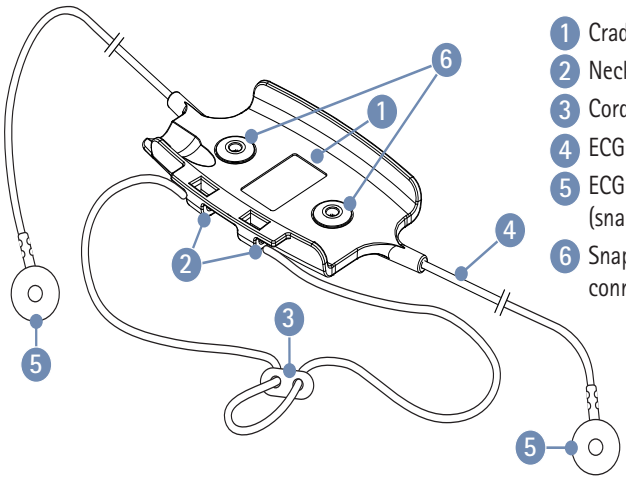

1. Cradle
2. Neckband guides
3. Cord stopper for length adjustment
4. ECG leadwires
5. ECG connections (snap fasteners for connection to ECG electrode)
6. Snap fastener interface in cradle for connection to the 1-channel transmitter

4 Start-up and Preparation

CAUTION	**Installation and instruction obligation** Incorrect installation or training may lead to wrong application of the ECG system. The ECG system may only be used if properly installed by a certified ergoline partner and after the user has been instructed by the certified ergoline partner.

The 1-channel ECG system is, among other options, operated with the ergoline ers2 application software. It is not possible to operate the system without software. Before use, the specially trained ergoline service partner needs to configure the software.

If you intend to use the ECG system with a software not expressly approved by ergoline, please contact the manufacturer of this software for information on installation, configuration, and possible restrictions.

4.1 Receiver

WARNING	**Patient environment** The receiver must be set up outside the patient environment. The patient environment is the area within a radius of 1.5 meters around the training device. While operating the device via the PC, the user is not allowed to touch the patient.
CAUTION	**Connection quality** Improper installation of the receivers may adversely affect the connection quality. If several receivers are used, they must be installed at a minimum distance of 50 cm from each other. Receivers must not be mounted directly on a metal surface. Check the proper installation of the receivers according to the instructions in this manual.

During commissioning, an ergoline service partner or the secondary user needs to mount and install the receiver.

- The receiver must be mounted outside the patient environment at a minimum height of 1.5 m with an unobstructed view of the training area. The two threaded inserts at the back of the receiver enable the installation on a floor stand or wall bracket.
- Choose a receiver position in which the front (blue surface with status indication LEDs) is perpendicular and faces the training area; the cable exit is at the bottom.
- Connect the receiver to the PC system using the USB cable.
- Install the receiver driver.
- Check the installation in the Windows Device Manager.

After starting the PC system, the receiver is ready for operation. The receiver connects automatically via the application software to a 1-channel transmitter that has been switched on and configured appropriately.

Shutting down the PC system deactivates the receiver and terminates all connections to the 1-channel transmitters.

4.2 1-Channel Transmitter

During commissioning, an ergoline service partner needs to configure the 1-channel transmitter in the application software.

- Clean and disinfect the 1-channel transmitter according to the instructions in this manual.
- Insert the AAA battery into the 1-channel transmitter according to the instructions in this manual.
- Switch on the 1-channel transmitter according to the instructions in this manual for the normal operation mode.
- After switch-on, check the LED status on the 1-channel transmitter to verify the operating status.
- Switch off the 1-channel transmitter according to the instructions in this manual for the normal operation mode.

After starting the PC system and the application software, the activated 1-channel transmitter is ready for operation. The connection to a 1-channel transmitter that has been switched on and configured appropriately occurs automatically via the application software.

Shutting down the PC system and switching off the 1-channel transmitter deactivates the transmitter.

4.2.1 Replacing the Battery of the 1-Channel Transmitter

WARNING	**Remove transmitter from patient before battery replacement** Electric shocks or malfunction of the 1-channel transmitter may result from contact with conductive materials. It is not permitted to replace the battery of the 1-channel transmitter while the transmitter is applied to the patient. Replace the battery according to the instructions in this manual.
WARNING	**Battery replacement, damaged battery** There is a risk of skin burns and patient injuries. Before replacing the battery, visually inspect it for signs of damage. If the battery insulation is damaged, the battery must not be used any longer. Replace the battery according to the instructions in this manual.
NOTICE	**Mechanical impact** The 1-channel transmitter may be damaged if exposed to strong mechanical impact (dropping onto the floor, shocks). When attaching and removing the transmitter or replacing the battery, take care not to damage the battery. Instructions for proper handling are given in this manual.
NOTICE	**Battery replacement, closing the cover** Screwing the cover too tight may damage the 1-channel transmitter. The only part to open on the 1-channel transmitter is the battery compartment. Please note that the cover of the 1-channel transmitter should only be hand-tightened, it is sufficient to screw it on one or one and a half revolution. Replace the battery according to the instructions in this manual.
NOTICE	**Battery replacement, incorrect insertion** Incorrect insertion of the battery may damage the 1-channel transmitter. Please note that the battery must be inserted from above into the upright 1-channel transmitter. Replace the battery according to the instructions in this manual.
NOTICE	**Leaking battery fluid** Batteries may leak and damage the 1-channel transmitter if the transmitter is not used for a long period of time. Remove the battery from the 1-channel transmitter if the transmitter will not be used for more than a week.

The 1-channel transmitter is powered from a commercially available, rechargeable AAA battery.

- Open the battery compartment of the 1-channel transmitter by turning the cover counter-clockwise.
- To remove a battery, hold the 1-channel transmitter in one hand and tilt it a bit, allowing the battery to slide out of the compartment.

- For insertion of a charged battery, hold the 1-channel transmitter upright in one hand or place it vertically on a table. Insert the charged battery in the battery compartment of the 1-channel transmitter with the minus pole first.

- Then place the cover on the thread and turn the cover approx. one and a half revolution clockwise to close.
- After switch-on, check the LED status on the 1-channel transmitter to verify the operating status.

4.2.2 Battery Management of the 1-Channel Transmitter

The 1-channel transmitter is powered from a commercially available, rechargeable AAA battery. A fully charged battery provides power for at least 6 hours.

To ensure optimal performance of the 1-channel transmitter, start the daily therapy sessions with a fully charged battery. If you follow this advice, you will not have to replace the battery between training units. We recommend replacing a battery with a charged battery after 5 to 6 operating hours.

5 Attaching the ECG System to the Patient

CAUTION	**Incorrect application** The ECG system is not intended for long-term monitoring. Skin irritation and/or allergies may occur. Apply the ECG system only as described in this manual.
CAUTION	**Insufficient ECG transmission quality** Line isolation monitor transients may resemble actual cardiac waveforms and thus inhibit heart rate alarms. This problem can be largely avoided by correct application of the chest belt and/or adapter. Regularly check the 1-channel transmitter for correct application to the chest belt or adapter and patient according to the instructions in this manual.
CAUTION	**Risk of infection** After use, the ECG system may be contaminated with bacteria or viruses. Clean and disinfect the 1-channel transmitter and the applied parts according to the cleaning and disinfection instructions in this manual.
CAUTION	**Risk of infection** The ECG system may only be applied on intact skin (e.g., not over open wounds, lesions, infected or inflamed areas).
CAUTION	**Wet environment** There is a risk of burn injuries and insufficient ECG transmission quality. The ECG system is not suitable for use in highly wet environments. Do not wear it in the shower or when swimming.

5.1 Visual Inspection of the ECG System

WARNING	**Visual inspection before use** Before each use, visually inspect the ECG system for signs of damage. If you detect damage that may result in a hazard to the patient or the operator, the ECG system must be repaired before it can be used again. Follow the instructions for visual inspection given in this manual.

Visually inspect the ECG system before each use. If one of the checks fails, please contact your ergoline service partner for further information.

Visual Inspection	Pass	Fail
Check the housing for mechanical damage, such as cracks, scuffing or distortion due to heat. Expected result: no damage		
Shake the device and listen for any loose or detached components. Expected result: no sound		
Check the device and snap fastener contacts for contamination, dust, and humidity. Expected result: no contamination, no humidity		
Check cover of battery compartment and sealing ring for wear. Expected result: no bent contacts on the inside, sealing ring flush on housing		

Check the contact spring in the battery compartment for wear due to improper battery replacement. Expected result: spring not bent		
Check the rechargeable batteries for wear (e.g., legibility of labeling, intact insulation). Expected result: no signs of wear, insulation intact		
Check the chest belt: Strap as elastic as it used to be, ECG electrodes not protruding, no loose stitching. Expected result: no signs of wear		
Check the adapter: Check leadwire insulation for damage Check leadwire connections for damage Check adapter cradle for damage Expected result: no signs of damage		

5.2 Applying the 1-Channel Transmitter and Chest Belt

WARNING	**Remove transmitter from patient before battery replacement** Electric shocks or malfunction of the 1-channel transmitter may result from contact with conductive materials. It is not permitted to replace the battery of the 1-channel transmitter while the transmitter is applied to the patient. Replace the battery according to the instructions in this manual.
CAUTION	**Insufficient ECG transmission quality** If the 1-channel transmitter is not properly applied, the ECG data may be incorrect or missing, which may lead to inadequate therapy and/or over-exertion. Check the 1-channel transmitter for correct application to the chest belt or adapter and patient according to the instructions in this manual.
NOTICE	**Mechanical impact** The 1-channel transmitter may be damaged if exposed to strong mechanical impact (dropping onto the floor, shocks). When attaching and removing the transmitter or replacing the battery, take care not to damage the battery. Instructions for proper handling are given in this manual.
NOTICE	**The protection rating applies only if the following conditions are met** IP42 applies only when the battery cover of the 1-channel transmitter is closed. Before starting a recording and before cleaning and disinfecting the device, make sure that the battery compartment is properly closed.
CAUTION	**Insufficient ECG transmission quality** If the chest belt is not properly applied, the ECG data may be incorrect or missing, which may lead to inadequate therapy and/or over-exertion. Check the 1-channel transmitter for correct application to the chest belt and patient according to the instructions in this manual.

CAUTION	**Risk of infection** Using the chest belt on another patient may cause cross-infections. The chest belt is intended for use on a single patient only. The product can be reused if reprocessed according to the instructions in this manual and if used on the same patient.
NOTICE	**Damaged chest belt** A damaged chest belt may adversely affect the ECG transmission quality. To avoid damage, do not kink or coil the chest belt or bend it sharply. Apply and secure the chest strap according to the instructions in this manual.

- Make sure that the 1-channel transmitter is dry.
- The chest belt is worn underneath clothing with the two electrodes in direct contact with bare skin.
- The electrode sites should be clean, dry and free of grease to allow optimal electrode contact with skin.
- Application sites with a lot of hair should be shaved. For best signal quality, the application sites should be moistened with a special electrolyte.

5.2.1 Applying the Chest Belt

- Attach the chest belt to the patient before connecting the 1-channel transmitter.
- Open the chest belt and apply it at the level of the sternum, making sure that the clasp and the belt loop point to you (Figure 1).

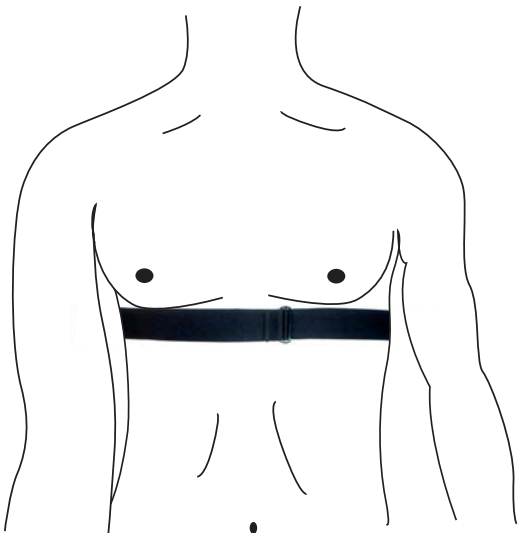

Figure 1

- Close the chest belt at the sternum by introducing the belt loop into the clasp.
- Adjust the width of the closed belt to the patient's chest by means of the buckle. The chest belt should be adjusted to a snug fit, so as not to move when the subject is active.
- When the chest belt is adjusted to the correct length, position it with the snap fasteners directly under the subject's sternum. (Figure 2)

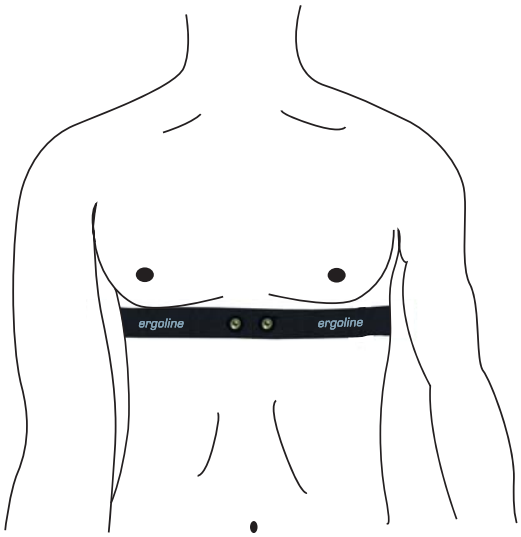

Figure 2

- Check that the ergoline logo on the chest belt is presented in the proper orientation.

5.2.2 Attaching and Switching On the 1-Channel Transmitter

The 1-channel transmitter and the chest belt are connected to each other by means of the integrated snap fasteners.

- Press the studs of the two snap fasteners on the 1-channel transmitter into the sockets of the snap fasteners on the chest belt until you feel them engage.
- Check that the ergoline logo on the 1-channel transmitter and on the chest belt is presented in the proper orientation. (Figure 3)

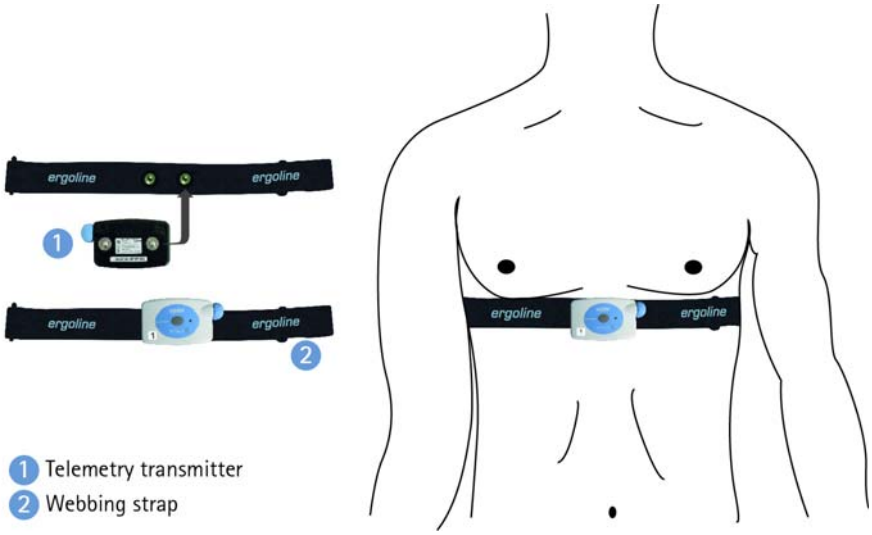

Figure 3

- After attaching the 1-channel transmitter to the chest belt, switch it on.

5.2.3 Removing the 1-Channel Transmitter and Chest Belt

After use, please remove the chest belt with the 1-channel transmitter from the patient.

- Adjust the chest belt with the 1-channel transmitter to a position where the clasp is directly below the sternum.
- Open the chest belt by lifting the belt loop out of the clasp.
- Pull the side of the chest belt with the belt loop around the patient's upper body and towards you.
- Remove the 1-channel transmitter from the chest belt by holding the chest belt with one hand and the 1-channel transmitter with the other hand and detaching it horizontally from the snap fasteners integrated in the chest belt.

5.3 Applying the 1-Channel Transmitter and Adapter

WARNING	**Remove transmitter from patient before battery replacement** Electric shocks or malfunction of the 1-channel transmitter may result from contact with conductive materials. It is not permitted to replace the battery of the 1-channel transmitter while the transmitter is applied to the patient. Replace the battery according to the instructions in this manual.
CAUTION	**Insufficient ECG transmission quality** If the 1-channel transmitter is not properly applied, the ECG data may be incorrect or missing, which may lead to inadequate therapy and/or over-exertion. Check the 1-channel transmitter for correct application to the chest belt or adapter and patient according to the instructions in this manual.
NOTICE	**Mechanical impact** The 1-channel transmitter may be damaged if exposed to strong mechanical impact (dropping onto the floor, shocks). When attaching and removing the transmitter or replacing the battery, take care not to damage the battery. Instructions for proper handling are given in this manual.
NOTICE	**The protection rating applies only if the following conditions are met** IP42 applies only when the battery cover of the 1-channel transmitter is closed. Before starting a recording and before cleaning and disinfecting the device, make sure that the battery compartment is properly closed.
WARNING	**Risk of strangulation** Risk of strangulation by adapter neckband. Use the adapter only in the presence of the primary user and according to the instructions in this manual.
CAUTION	**Insufficient ECG transmission quality** If the adapter is not properly applied, the ECG data may be incorrect or missing, which may lead to inadequate therapy and/or over-exertion. Check the 1-channel transmitter for correct application to the adapter and patient according to the instructions in this manual.
CAUTION	**Wrong ECG electrodes** Using the wrong ECG electrodes may adversely affect the ECG transmission quality. The 1-channel transmitter must only be used with commercially available ECG electrodes for exercise testing and according to the instructions of the ECG electrode manufacturer.

NOTICE	**Damaged adapter** A damaged adapter may adversely affect the ECG transmission quality. To avoid damage, do not kink or coil the adapter and its cables or bend them sharply. Apply and secure the adapter according to the instructions in this manual.

- Make sure that the adapter and the 1-channel transmitter are dry.
- The ECG telemetry electrode adapter is worn underneath clothing; the adhesive ECG electrodes must be attached directly on the patient's skin.
- The ECG electrode sites should be clean, dry and free of grease to allow optimal electrode contact with the skin.
- ECG electrode application sites with a lot of hair should be shaved.

5.3.1 Attaching and Switching On the 1-Channel Transmitter

- Place the adapter in front of you, the TOP arrow markers on the type plate pointing away from you, and press the studs of the two snap fasteners on the 1-channel transmitter into the sockets of the snap fasteners on the cradle until you feel them engage. Check that the battery cover of the 1-channel transmitter rests in the corresponding groove in the cradle.
- Check that the ergoline logo on the 1-channel transmitter is presented in the proper orientation.
- After attaching the 1-channel transmitter to the adapter, switch it on.

5.3.2 Applying Adhesive Electrodes

- Apply the electrodes according to the manufacturer's instructions to the right clavicle (middle) and the left costal arch (at the level of the sixth rib below the pectoral muscle).

5.3.3 Attaching the Adapter with the 1-Channel Transmitter to the Patient

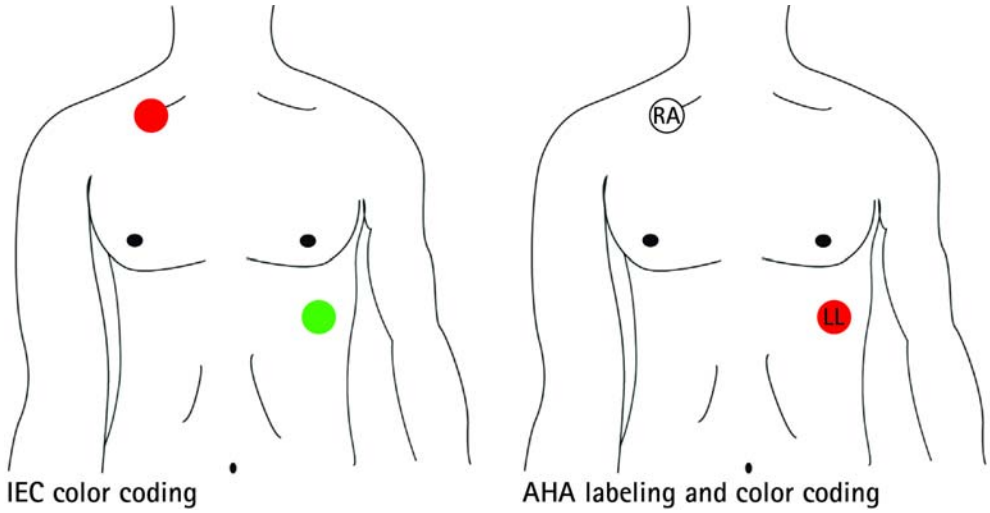

- Place the neckband with the adapter around the patient's neck.
- Check that the ergoline logo on the 1-channel transmitter is presented in the proper orientation.
- Adjust the neckband length with the cord stopper so that the adapter with the 1-channel transmitter is just above patient's sternum.
- Connect the electrode leadwires of the adapter to the previously applied adhesive ECG electrodes, observing the labeling.
- Check that the leadwires are connected to the correct ECG electrodes.

5.3.4 Removing the Adapter with the 1-Channel Transmitter from the Patient

- Carefully disconnect the leadwires from the ECG electrodes.
- Remove the adapter with the 1-channel transmitter from the patient.
- Carefully remove the ECG electrodes from the patient following the manufacturer's instructions.
- Remove the 1-channel transmitter from the adapter by holding the adapter with one hand and the 1-channel transmitter with the other hand and detaching it horizontally from the snap fasteners integrated in the cradle.

6 Cleaning and Disinfection Instructions

CAUTION	**Risk of infection** After use, the ECG system may be contaminated with bacteria or viruses. Clean and disinfect the 1-channel transmitter and the applied parts according to the cleaning and disinfection instructions in this manual.
NOTICE	**Cleaning and disinfection** Wrong cleaning agents or disinfectants or wrong application of these substances may damage the ECG system. Use the recommended cleaning agents and disinfectants for cleaning and disinfection. Clean and disinfect your ECG system according to the instructions in this manual.

Clean and disinfect the devices before their first use, before applying them to a patient, and after removing them from a patient.

Clean and disinfect the devices when sending them to ergoline or a certified ergoline service partner.

Observe the following information for cleaning and disinfection.

6.1 1-Channel Transmitter

NOTICE	**Inappropriate cleaning and disinfection** When the battery compartment of the 1-channel transmitter is not properly closed, humidity entering the compartment during cleaning and disinfection may damage the device. Close the battery compartment of the 1-channel transmitter before cleaning and disinfection according to the instructions in this manual.
NOTICE	**The protection rating applies only if the following conditions are met** IP42 applies only when the battery cover of the 1-channel transmitter is closed. Before starting a recording and before cleaning and disinfecting the device, make sure that the battery compartment is properly closed.

6.1.1 Cleaning

Recommended cleaning agent: Isopropyl alcohol, 70 % solution (IPA)

- Prepare the cleaning solution according to the manufacturer's instructions.
- Dampen a clean cloth with the selected cleaning solution.
- Wring excess liquid from the cloth and squeeze until dry.
- Wipe the exterior surfaces of the 1-channel transmitter until all visible soil has been removed.

6.1.2 Disinfection

Clean the 1-channel transmitter before disinfecting it.

Recommended disinfectant: Isopropyl alcohol (IPA), 70 % solution, spray

- Apply IPA spray to the surface from a distance of 15 to 20 cm until the entire surface is wet.
- Allow the solution to remain on the treated surface for at least 1 minute.
- Dry the treated surface with a clean cloth.
- Dampen a clean cloth with distilled water.
- Wring excess liquid from the cloth.
- Wipe the exterior surfaces of the 1-channel transmitter.
- Use another clean cloth to dry the surface of the 1-channel transmitter.

6.2 Adapter

6.2.1 Cleaning

Recommended cleaning agent: Isopropyl alcohol, 70 % solution (IPA)

- Prepare the cleaning solution according to the manufacturer's instructions.
- Dampen a clean cloth with the selected cleaning solution.
- Wring excess liquid from the cloth and squeeze until dry.
- Wipe the exterior surfaces of the adapter until all visible soil has been removed.

6.2.2 Disinfection

Clean the adapter before disinfecting it.

Recommended disinfectant: Isopropyl alcohol, 70 % solution (IPA spray)

- Apply IPA spray to the surface from a distance of 15 to 20 cm until the entire surface is wet.
- Allow the solution to remain on the treated surface for at least 1 minute.
- Dry the treated surface with a clean cloth.
- Repeat steps 1 to 3.
- Dampen a clean cloth with distilled water.
- Wring excess liquid from the cloth.
- Wipe the exterior surfaces of the adapter.
- Use another clean cloth to dry the surface of the adapter.

6.3 Chest Belt

CAUTION	**Risk of infection** Using the chest belt on another patient may cause cross-infections. The chest belt is intended for use on a single patient only. The product can be reused if reprocessed according to the instructions in this manual and if used on the same patient.

Recommended cleaning agent and disinfectant: Ecolab Eltra 40 Extra

6.3.1 Cleaning and Disinfection

- Put the chest belt into a laundry bag or mesh bag.
- Machine-wash the chest strap at 40 °C for at least 20 minutes, using the special detergent Ecolab Eltra 40 Extra according to the manufacturer's instructions.
- Air-dry the wet or dripping-wet chest belt and take care not to overstretch it while wet.

6.4 Receiver

It is recommended to regularly remove dust etc. from the receiver.

6.4.1 Cleaning

- Dampen a clean cloth with distilled water.
- Wring excess liquid from the cloth.
- Wipe the exterior surfaces of the receiver.
- Use another clean cloth to dry the surface of the receiver.

7 Maintenance Information

WARNING	**Visual inspection before use** Before each use, visually inspect the ECG system for signs of damage. If you detect damage that may result in a hazard to the patient or the operator, the ECG system must be repaired before it can be used again. Follow the instructions for visual inspection given in this manual.
NOTICE	**Maintenance** Proper maintenance by the secondary user is a primary condition for long-term safety and reliability of the ECG system. Observe the maintenance information in this manual.
NOTICE	**Damage to device and accessories** Unauthorized personnel is not adequately trained and educated to properly maintain the device. Repairs carried out by unauthorized personnel may damage the ECG system. Inform your ergoline service partner when you identify or suspect a malfunction.
NOTICE	**Safety only with approved accessories/applied parts** Safe and reliable operation of the ECG system is only possible when the supplied or approved applied parts or accessories are used. Observe the appropriate instructions in this manual and the instructions supplied with the applied parts and accessories.

This section provides information for maintenance and care of the system to be carried out by the secondary user. Familiarize yourself with this information before commissioning ergoline or an authorized ergoline representative with the maintenance.

Ergoline recommends having preventive maintenance carried out every two years by a certified ergoline service partner, which includes:

- Visual inspection
- Safety tests according to IEC 62353
- Functional test (FT) within the application software
- Firmware update

7.1 Maintenance Requirement

If the responsible individuals, hospitals or institutes using this device fail to implement an adequate maintenance schedule, the device may fail and pose a potential threat to safety. The device should be regularly maintained, irrespective of its usage, to ensure the proper functioning of the system components when they are needed.

The user is responsible for informing ergoline or one of the authorized representatives of any required maintenance.

7.1.1 Warranty Information

Only authorized ergoline service partners are allowed to carry out maintenance. Improper repair of the device may render any existing warranty null and void.

7.2 Functional Test

Functional tests can only be performed in conjunction with the application software. We recommend performing the following functional tests within the application software. For information on possible functional restrictions (e.g., alarms), refer to the instructions for use of your application software and contact the manufacturer.

FT1.1 Verify HR reading in the software:
- Switch on the 1-channel transmitter.
- Connect a calibrated ECG signal generator via the adapter.
- Add a test patient in the software and assign this patient to a training place.

FT1.2 Verify HR alarms in the software [A = HR_{max}, B = HR_{min}, C = HR_{zero}]:
- Switch on the 1-channel transmitter.
- Connect a calibrated ECG signal generator via the adapter.
- Add a test patient in the software, set the heart rate limits, and assign this patient to a training place.

FT1.3 Low battery check:
- Insert an almost depleted battery in the 1-channel transmitter
- Switch on the 1-channel transmitter.

FT1.4 Full battery check:
- Insert a fully charged battery in the 1-channel transmitter.
- Switch on the 1-channel transmitter.

FT1.5 Check wireless ECG signal transmission:
- Switch on the 1-channel transmitter.

Test ID	Description
FT1.1:	Generate an ECG signal with a defined heart rate. Check the heart rate displayed in the software. Expected result: The HR displayed in the software corresponds to the generated heart rate.
FT1.2_A	Generate an ECG signal with a heart rate above the upper heart rate limit. Expected result: The software indicates the violation of the upper HR limit.
FT1.2_B	Generate an ECG signal with a heart rate below the lower heart rate limit. Expected result: The software indicates the violation of the lower HR limit.
FT1.2_C	Switch off the ECG signal. Expected result: The software indicates HR = zero.
FT1.3	Connect the 1-channel transmitter to the software. Expected result: Once the 1-channel transmitter is connected, a charging icon appears in the software. For charge levels below 40 % the icon is red.

FT1.4	Connect the 1-channel transmitter to the software. Expected result: Once the 1-channel transmitter is connected, a charging icon appears in the software. For charge levels above 40 % the icon is black.
FT1.5	Connect the 1-channel transmitter to the software. Cover the 1-channel transmitter with your hand. Expected result: Once the 1-channel transmitter is connected, a connection icon appears in the software. The connection quality decreases. For levels below 40 % the icon is red.

7.3 Firmware Update

The secondary user performs the firmware update of the 1-channel transmitter. When software faults have been identified and when new functions become available, it may be necessary to update the firmware. The secondary user can obtain the firmware version of the 1-channel transmitter using the maintenance software. Please contact your ergoline service partner for more information.

7.4 Troubleshooting

Error	Cause
1-channel transmitter cannot be switched on	Check the battery charge level. Check the contacts in the cover of the battery compartment. If they are bent, replace the cover. Check the battery clip. If it is bent, contact your ergoline service partner.
Instable connection of the 1-channel transmitter	Check the battery charge level. A low battery charge level may cause problems. Check the position of the receiver.
Poor signal quality from 1-channel transmitter	Check the applied parts. Defective applied parts may reduce the signal quality. A wet chest belt may affect the signal quality. Damp plugs of the adapter may affect the signal quality. Damp plugs of the 1-channel transmitter may affect the signal quality.

8 Disposal

NOTICE	**Environmental impact** Electronic devices and the accessories contain metal and plastic parts. After the expiration of their useful life, the parts must be disposed of in compliance with the valid waste regulations to prevent any environmental impact. Once the service life of the ECG system has expired, it must be disposed of in compliance with the applicable local and national provisions. If you have any questions about the disposal of the device, please contact ergoline or one of the authorized ergoline representatives.

At the end of their service life, the product described in this manual and its accessories must not be disposed of as unsorted municipal waste but in compliance with the applicable local waste control regulations.

If you have questions regarding the disposal, please contact ergoline or its representatives.

The batteries have to be taken to a collection point. They need to be recycled.

9 Technical Specifications

9.1 1-Channel Transmitter

9.1.1 General Data

Description	Data
Classification	Device with internal power supply; type CF, defibrillation-proof applied part; class IIa
Number of ECG channels	1
Operating mode	Continuous operation
Operating time on battery power	Approx. 6 hours of continuous operation
Battery charging time	2.5 hours, charging current 500 mA, 1020 mAh rechargeable battery capacity
Controls and indicators	• LED indicators for operating status • On/Off button
Biocompatibility	To ISO10993
Respiration, leads-off sensing and active noise suppression	No
Defibrillation protection	Yes Avg. recovery time < 5 s

9.1.2 Electronic System

Description	Data
Battery type	1 x HR03/AAA NiMH battery, 1020 mAh
Amplitude response	0.05 to 125 Hz
AD converter	250 Hz, 12 bit (2.93 µV)
Input voltage range for ECG	+/– 6 mV
Common mode rejection	CMR > 80 dBm
Input impedance	> 10 MΩ

9.1.3 Environment

Description	Data
Operating conditions	Temperature: +10 to +35 °C Rel. humidity: 30 to 75 % (no condensation) Atmospheric pressure: 700 to 1060 hPa
Transport and storage conditions	Temperature: –20 to +65 °C Rel. humidity: 10 to 95 % (no condensation) Atmospheric pressure: 500 to 1060 hPa

9.1.4 Bluetooth Module

Description	Data
Transmission mode	Bluetooth 2.1 + EDR, class 1
Frequency range	2402 – 2483.5 MHz, ISM band
Output power of the 1-channel transmitter (max.)	+9.8 dBm
Receiver sensitivity (min.)	–94 dBm
Range	Up to 50 m (open field)
Antenna type	integrated
Maximum antenna gain	–0.5 dB

9.1.5 Mechanical Data

Description	Dimension
Dimensions	length: 84 mm width: 48 mm depth: 17.5 mm
Weight	44 g (w/o. battery) 56 g (with battery)
Material	ABS (housing)
Degree of protection	IP 42

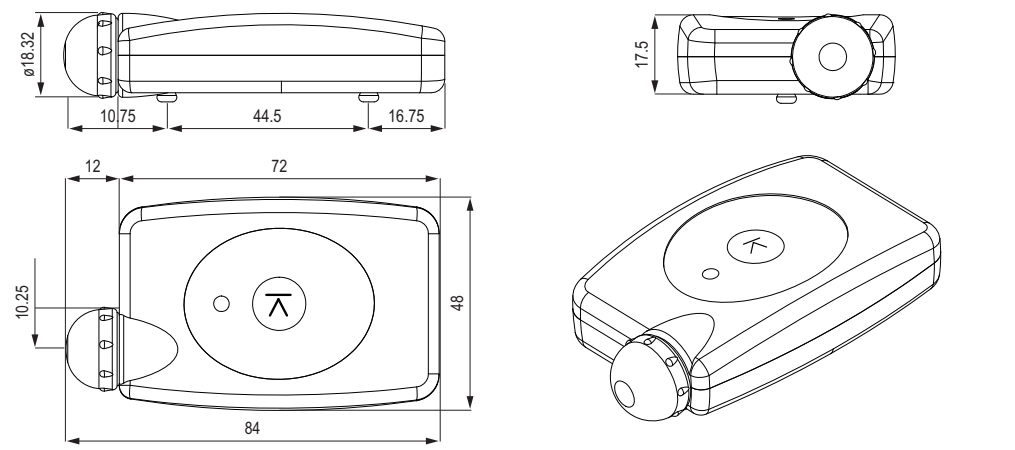

9.2 Application Software ers2

Description	Data
Heart rate calculation	The heart rate is calculated by the ers2 software which uses the *Pan Tompkins* algorithm for QRS detection.
Tall T-wave rejection capability	For T-waves <= 0.8 mV, the heart rate indication is within the specified error limits (+/– 10 % or 5 BPM)
Response to irregular rhythm	A1 / (3a): 40 BPM A2 / (3b): 30 BPM A3 / (3c): 120 BPM A4 / (3d): 90 BPM to IEC 60601-2-27
Response time to changes in heart rate	80 BPM increase to 120 BPM: max. 6 s 80 BPM decrease to 40 BPM: max. 12 s
Time to alarm for tachycardia	B1: 11 s 0.5 × B1: 12 s 2 × B1: 23 s B2: 11 s 0.5 × B2: 12 s 2 × B2: 16 s To IEC 60601-2-27
Visual alarm	Location: ers2 software monitoring screen Color/Modulation: 1-Hz modulation between red and yellow Size: 160 × 23 pixels [Monitor resolution 1920 × 1080] Visual alarm update: every 2 min
Audible alarm	Source: PC sound card Frequency of sound: 1 Hz [on/off] Audible alarm update: every 2 min

9.3 Receiver

9.3.1 Summary

Description	Data
Transmission mode	Bluetooth 2.1 + EDR, class 1
Frequency range	2402–2483.5 MHz, ISM band
Operating mode	continuous operation
Power supply	via USB current (max.): 175 mA
Protection class	SK II
Degree of protection	IP 20
Max. output power	18.0 dBm

Antenna type	integrated
Maximum antenna gain	2.14 dBi
Dimensions	length: 11.3 cm width: 5.8 cm depth: 2.8 cm
Weight	90 g
Enclosure	ABS
Operating conditions	Temperature: +10 to +35 °C Rel. humidity: 30 to 75 % (no condensation) Atmospheric pressure: 700 to 1060 hPa
Transport and storage conditions	Temperature: –20 to +65 °C Rel. humidity: 10 to 95 % (no condensation) Atmospheric pressure: 500 to 1060 hPa

9.4 Chest Belt

9.4.1 Summary

Description	Data
Applied part	Type CF, defibrillation-protected
AC Impedance – typical	approx. 400 Ohm
DC offset voltage – typical	< 1 mV
Defibrillation overload recovery typical	approx. 6 mV after 5 s
Bias current tolerance	< 110 mV over 8 hours
Combined offset instability and internal noise	50 mV
Biocompatibility	ISO 10993
Chest belt	Textile
Snap fastener contacts	Nickel-plated brass
Sensor type	Dry electrode
Sensor material	Conductive polymer
Sensor area	2 x ~1300 mm^2 (two sensor areas per belt)
Operating conditions	Temperature: +10 to +35 °C Rel. humidity: 30 to 75 % (no condensation) Atmospheric pressure: 700 to 1060 hPa
Transport and storage conditions	Temperature: –20 to +65 °C Rel. humidity: 10 to 95 % (no condensation) Atmospheric pressure: 500 to 1060 hPa

9.4.2 Dimensions

Reference Letter	Description	Dimension	Permitted Deviation
A	Length of chest belt	880 mm	+/– 20 mm
B	Width of chest belt	30 mm	+/– 1 mm
C	Distance between snap fastener contacts from center to center	44.5 mm	+/– 0.5 mm
D	Length of sensor module	270 mm	+/– 2 mm
E	Length of sensor	63 mm	+/– 2 mm
F	Length of center textile	134 mm	+/– 2mm
G	Distance from edge of sensor module to loop end	45 mm	+/– 3 mm
H	Length of loop	15 mm	+/–

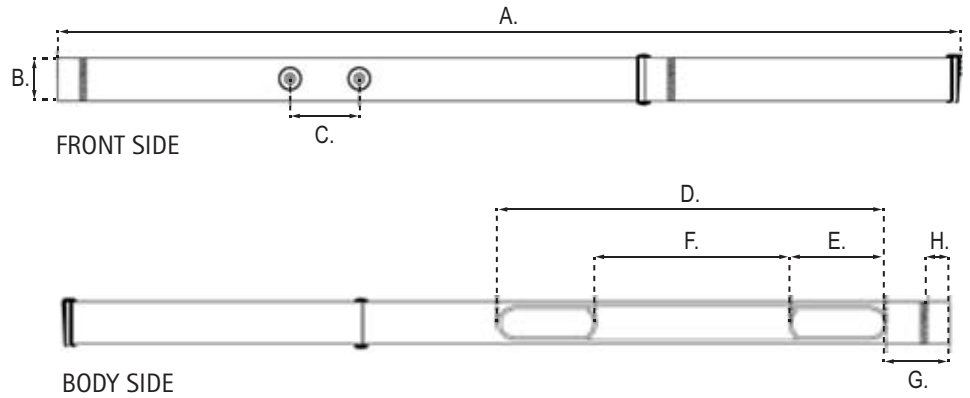

9.5 Adapter

9.5.1 Summary

Description	Data
Applied part	• Type CF, defibrillation-protected • ANSI/AAMI EC53
Cord	Silicone
Cord stopper	Plastic
Cradle	Thermolast K
Leadwire	M-PUR
Spring of snap fastener for connection of 1-channel transmitter	Nickel-free, CuZn, silver
Insulation ECG snap connector	M-PUR

Biocompatibility	ISO10993
Operating conditions	Temperature: +10 to +35 °C Rel. humidity: 30 to 75 % (no condensation) Atmospheric pressure: 700 to 1,060 hPa
Transport and storage conditions	Temperature: –20 to +65 °C Rel. humidity: 10 to 95 % (no condensation) Atmospheric pressure: 500 to 1,060 hPa

9.5.2 Dimensions

Description	Dimension	Permitted Deviation
Length of silicone cord	1020 mm	+/– 10 mm
Length of ECG leadwire	250 mm	+/– 15 mm
Width of cradle	58.8 mm	+/– 1 mm
Length of cradle	87 mm	+/– 1 mm
Distance between snap fastener contacts from center to center	44.5 mm	+/– 0.5 mm

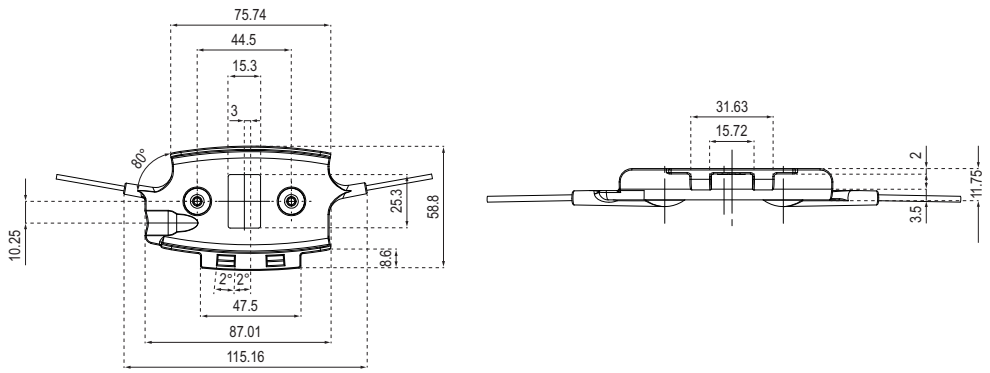

10 Electromagnetic Compatibility (EMC) DIN EN 60601-1-2

Changes or modifications to this system not expressly approved by ergoline could cause EMC issues with this or other equipment.

This system is designed to comply with applicable regulations regarding EMC. Its compliance with these requirements has been verified. It needs to be installed and put into service according to the EMC information stated as follows.

Guidance and Manufacturer's Declaration – Electromagnetic Emissions		
The ECG system is intended for use in the electromagnetic environment specified below. It is the responsibility of the customer or user to ensure that the ECG system is used in such an environment.		
Emissions Test	**Compliance**	**Electromagnetic Environment – Guidance**
RF emissions to EN 55011	Group 2	The ECG system must emit electromagnetic energy in order to perform its intended function. These emissions may cause interference in nearby electronic equipment.
RF emissions (radiated) to EN 55022/55032, ANSI C63.4	Class B	The ECG system is suitable for use in all establishments, including domestic and those directly connected to the public low-voltage power supply network that supplies buildings used for domestic purposes.
RF emissions (conducted) to EN 55022/ 55032, ANSI C63.4	Class B	
Harmonic emissions to EN 61000-3-2	not applicable	
Voltage fluctuations/flicker emissions to EN 61000-3-3	not applicable	

Guidance and Manufacturer's Declaration – Electromagnetic Immunity			
The ECG system is intended for use in the electromagnetic environment specified below. It is the responsibility of the customer or user to ensure that the ECG system is used in such an environment.			
Immunity Test	**IEC 60601 Test Level**	**Compliance Level**	**Electromagnetic Environment – Guidance**
Electrostatic discharge (ESD) to EN 61000-4-2	± 8 kV contact ± 15 kV air	± 8 kV ± 15 kV	Floors should be wood, concrete or ceramic tile. If floors are covered with synthetic material, the relative humidity should be at least 30 %.
Electrical fast transient/burst to EN 61000-4-4	± 2 kV for power supply lines ± 1 kV for input/output lines	not applicable	Mains power quality should be that of a typical commercial or hospital environment.
Surge to EN 61000-4-5	± 1 kV differential mode ± 2 kV common mode	not applicable	Mains power quality should be that of a typical commercial or hospital environment.
Voltage dips, short interruptions and voltage variations on power supply input lines to EN 61000-4-11	< 5 % UT (> 95 % dip in UT) for 0.5 cycles 40 % UT (60 % dip in UT) for 5 cycles 70 % UT (30 % dip in UT) for 25 cycles < 5 % UT (> 95 % dip in UT) for 5 seconds	not applicable	Mains power quality should be that of a typical commercial or hospital environment. If the user of the ergoline ECG telemetry system requires continued operation during power mains interruptions, it is recommended that the receiving system be powered from an uninterruptible power supply or a battery.
Power frequency (50/60 Hz) magnetic field to EN 61000-4-8	30 A/m	passed	Power frequency magnetic fields should be at levels characteristic of a typical location in a typical commercial or hospital environment. The ECG system has no components susceptible to magnetic fields.
Note: UT is the a.c. mains voltage prior to application of the test level.			

Guidance and Manufacturer's Declaration – Electromagnetic Immunity			
The ECG system is intended for use in the electromagnetic environment specified below. It is the responsibility of the customer or user to ensure that the ECG system is used in such an environment.			
Immunity Test	**IEC 60601 Test Level**	**Compliance Level**	
Conducted RF to EN 61000-4-6 Radiated RF to EN 61000-4-3	3 Vrms 150 kHz to 80 MHz 10 V/m 80 MHz to 2.7 GHz	3 V 10 V/m	Portable and mobile RF communications equipment should be used no closer to any part of the ECG system, including cables, than the recommended separation distance calculated from the equation applicable to the frequency of the transmitter. **Recommended separation distance:** d = 1.2 √P d = 1.2 √P for 80 MHz to 800 MHz d = 2.3 √P for 800 MHz to 2.5 GHz where P is the maximum output power rating of the 1-channel transmitter in watts (W) according to the transmitter manufacturer and d is the recommended separation distance in meters (m). Field strengths from fixed RF transmitters, as determined by an electromagnetic site survey (a), should be less than the compliance level in each frequency range (b). Interference may occur in the vicinity of equipment marked with the following symbol:
Note 1: At 80 MHz and 800 MHz, the higher frequency range applies. **Note 2:** These guidelines may not apply in all situations. Electromagnetic propagation is affected by absorption and reflection from structures, objects, and people.			
(a) Field strengths from fixed transmitters, such as base stations for radio (cellular/cordless) telephones and land mobile radio, AM and FM radio broadcast and TV broadcast cannot be predicted theoretically with accuracy. To assess the electromagnetic environment due to fixed RF transmitters, an electromagnetic site survey should be considered. If the measured field strength in the location in which the ECG system is used exceeds the applicable RF compliance level above, the ECG system should be observed to verify normal operation. If abnormal performance is observed, additional measures may be necessary, such as re-orienting or relocating the ECG system. (b) Over the frequency range from 150 kHz to 80 MHz, field strengths should be less than 3 V/m.			

Recommended separation distances between portable and mobile RF communications equipment and the ergoline 1-channel transmitter			
The ECG system is intended for use in an electromagnetic environment, as specified below, in which radiated RF disturbances are controlled. The customer or the user of the ECG system can help prevent electromagnetic interference by maintaining a minimum distance between portable and mobile RF communications equipment (transmitters) and the ECG system as recommended below, according to the maximum output power of the communications equipment.			
Rated maximum output power of the 1-channel transmitter [W]	**Separation distance according to frequency of transmitter in meters [m]**		
	150 kHz to 80 MHz d = 1.2 √P	**80 MHz to 800 MHz** d = 1.2 √P	**800 MHz to 2.5 GHz** d = 2.3 √P
0.01	0.12		
0.1	0.37		
1	1.17		
10	3.7		
100	11.7		
For transmitters rated at a maximum output power not listed above, the recommended separation distance d in meters (m) can be estimated using the equation applicable to the frequency of the transmitter, where P is the maximum output power rating of the transmitter in watts (W) according to the transmitter manufacturer. **Note 1:** At 80 MHz and 800 MHz, the higher frequency range applies. **Note 2:** These guidelines may not apply in all situations. Electromagnetic propagation is affected by absorption and reflection from structures, objects, and people.			

ergoline GmbH
Lindenstraße 5
72475 Bitz
Germany

Tel.: +49-(0) 7431 98 94 - 0
Fax: +49-(0) 7431 98 94 - 128
e-mail: info@ergoline.com
http: www.ergoline.com