TEST REPORT

Product Name : Camera Wall Plate
Model Number : KNA-CWP-BK-01
FCC ID : 2AWLO-CWP1

Prepared for : Kuna Systems Corporation
Address : 883 Sneath Lane, Suite 222,San Bruno, California ,U.S.A. 94066

Prepared by : EMTEK (SHENZHEN) CO., LTD.
Address : Building 69, Majialong Industry Zone, Nanshan District, Shenzhen, Guangdong, China

Tel: (0755) 26954280
Fax: (0755) 26954282

Report Number : ENS2204260160W00201R
Date(s) of Tests : April 26, 2022 to May 27, 2022
Date of issue : May 27, 2022

Table of Contents

1 TEST RESULT CERTIFICATION 3

2 EUT TECHNICAL DESCRIPTION 5

3 SUMMARY OF TEST RESULT 6

4 TEST METHODOLOGY 7

4.1 GENERAL DESCRIPTION OF APPLIED STANDARDS 7
4.2 MEASUREMENT EQUIPMENT USED 7
4.3 DESCRIPTION OF TEST MODES 9

5 FACILITIES AND ACCREDITATIONS 10

5.1 FACILITIES 10
5.2 EQUIPMENT 10
5.3 LABORATORY ACCREDITATIONS AND LISTINGS 10

6 TEST SYSTEM UNCERTAINTY 11

7 SETUP OF EQUIPMENT UNDER TEST 12

7.1 RADIO FREQUENCY TEST SETUP 1 12
7.2 RADIO FREQUENCY TEST SETUP 2 12
7.3 CONDUCTED EMISSION TEST SETUP 15
7.4 BLOCK DIAGRAM CONFIGURATION OF TEST SYSTEM 16
7.5 SUPPORT EQUIPMENT 16
7.6 RADIATED SPURIOUS EMISSION 17
7.7 CONDUCTED EMISSIONS TEST 29

1 TEST RESULT CERTIFICATION

Applicant	:	Kuna Systems Corporation
Address	:	883 Sneath Lane, Suite 222,San Bruno, California ,U.S.A. 94066
Manufacturer	:	Kuna Systems Corporation
Address	:	883 Sneath Lane, Suite 222,San Bruno, California ,U.S.A. 94066
EUT	:	Camera Wall Plate
Model Name	:	KNA-CWP-BK-01
Trademark	:	N/A

Measurement Procedure Used:

APPLICABLE STANDARDS	
STANDARD	**TEST RESULT**
FCC 47 CFR Part 2, Subpart J FCC 47 CFR Part 15, Subpart C	**PASS**
IC RSS-GEN, Issue 5(04-2018)+A1(03-2019)+A2(02-2021) IC RSS-247 Issue 2(02-2017)	**PASS**

The above equipment was tested by EMTEK(SHENZHEN) CO., LTD. The test data, data evaluation, test procedures, and equipment configurations shown in this report were made in accordance with the procedures given in ANSI C63.10 (2013) and the energy emitted by the sample EUT tested as described in this report is in compliance with the requirements of FCC Rules Part 2, Part 15.247, IC RSS-247 Issue 2 and IC RSS-GEN, Issue 5.

The test results of this report relate only to the tested sample identified in this report.

Date of Test : April 26, 2022 to May 27, 2022

Prepared by : Luo Pei Ye
Luo peiye/Editor

Reviewer : Joe Xia
Joe Xia/Supervisor

Approve & Authorized Signer : Lisa Wang/Manager

EMTEK (SHENZHEN) CO., LTD. TESTING

Modified History

Version	Report No.	Revision Date	Summary
V1.0	ENS2109280200W00202R	/	Original Report
V1.0	ENS2204260160W00201R	/	Class II permissive change

Note：This report is based on ENS2109280200W00202R original test EUT with the following changes. These changes will affect the test results. Therefore, according to KDB 178919, the modified EUT only tested Radiated Spurious Emission and Conducted Emission Test, and the results of other test items remained unchanged based on the original report.
Content of change:
1. The position of the UART interface is changed. The original pad is changed to a through-hole pad.
2. Add the JTAG interface for the through-hole pad
3. Change the dimming circuit from GPIO direct control to triode control.
4. Remove the diode
5. Reserve the power input filter capacitor.
6.Modify the USB solder pad dimensions. Aperture changed from 1.12mm to 0.9mm

2 EUT TECHNICAL DESCRIPTION

Characteristics	Description
Product:	Camera Wall Plate
Model Number:	KNA-CWP-BK-01
Sample number:	1#
Data Rate :	1Mbps
Modulation:	GFSK
Operating Frequency Range:	2402-2480MHz
Number of Channels:	40 Channels
Transmit Power Max:	10.25 dBm
Antenna Type:	FPC Antenna
Antenna Gain:	2.61dBi
Power Supply:	AC 120V/60Hz
Date of Received:	April 26, 2022
Temperature Range:	Refer to user's manual

Note: for more details, please refer to the User's manual of the EUT.

3 SUMMARY OF TEST RESULT

FCC PartClause	IC Part Clause	Test Parameter	Verdict	Remark
15.247(d) 15.209 15.205	RSS-Gen8.9 RSS-Gen8.10 RSS-Gen6.13 RSS-2473.3 RSS-2475.5	Radiated Spurious Emission	PASS	
15.207	RSS-Gen 8.8	Conducted EmissionTest	PASS	
NOTE1:N/A (Not Applicable) NOTE2:According to FCC OET KDB 558074, the report use radiated measurements in the restricted frequency bands. In addition, the radiated test is also performed to ensure the emissions emanating from the device cabinet also comply with the applicable limits.				

RELATED SUBMITTAL(S)/GRANT(S):

This submittal(s) (test report) is intended for **FCC ID: 2AWLO-CWP1** filing to comply with Section 15.247 of the FCC Part 15, Subpart C Rules.

4 TEST METHODOLOGY

4.1 GENERAL DESCRIPTION OF APPLIED STANDARDS

According to its specifications, the EUT must comply with the requirements of the following standards:
FCC 47 CFR Part 2, Subpart J
FCC 47 CFR Part 15, Subpart C
IC RSS-GEN, Issue 5(04-2018)+A1(03-2019)+A2(02-2021)
IC RSS-247 Issue 2(02-2017)
FCC KDB 558074 D01 15.247 Meas Guidance v05r02

4.2 MEASUREMENT EQUIPMENT USED

Conducted Emission Test Equipment

Equipment	Manufacturer	Model No.	Serial No.	Last Cal.	Cal. Interval
EMI Test Receiver	Rohde & Schwarz	ESCI	101384	2022/5/14	1Year
AMN	Rohde & Schwarz	ENV216	101161	2022/5/14	1Year
AMN	Kyoritsu	KNW-407	8-1492-9	2022/5/15	1Year

For Spurious Emissions Test

Equipment	Manufacturer	Model No.	Serial No.	Last Cal.	Cal. Interval
Pre-Amplifier	HP	8447F	2944A07999	2022/5/14	1Year
EMI Test Receiver	Rohde & Schwarz	ESCI	101414	2022/5/14	1Year
Bilog Antenna	Schwarzbeck	VULB9163	712	2021/7/5	2 Year
Horn antenna	Schwarzbeck	BBHA9120D	9120D-1178	2020/7/4	2 Year
Pre-Amplifie	Lunar EM	LNA1G18-48	J1011131010001	2022/5/15	1Year
Spectrum Analyzer	Rohde & Schwarz	FSV40	100967	2022/5/14	1Year
Horn antenna	Schwarzbeck	BBHA9170	9170-399	2021/6/12	2 Year
Cable	H+B	NmSm-05-C15052	N/A	2022/5/15	1 Year
Cable	H+B	NmSm-2-C15201	N/A	2022/5/15	1 Year
Cable	H+B	NmNm-7-C15702	N/A	2022/5/15	1 Year
Cable	H+B	SAC-40G-1	414	2022/5/15	1 Year
Cable	H+B	SUCOFLEX104	MY14871/4	2022/5/15	1 Year
Cable	H+B	BLU18A-NmSm-6500	D8501	2022/5/15	1 Year
Band reject Filter(50dB)	WI/DE	WRCGV-2400(2400-2485MHz)	2	2022/5/15	1 Year

For other test items:

Equipment	Manufacturer	Model No.	Serial No.	Last Cal.	Cal. Interval
Signal Analyzer	Agilent	N9010A	MY53470879	2022/5/14	1Year
Vector Signal Generater	Agilent	N5182B	MY53050878	2022/5/14	1Year
Analog Signal Generator	Agilent	N5171B	MY53050553	2022/5/14	1Year
Power Meter	Agilent	PS-X10-100	\	2022/5/15	1Year

Blocking Box	THEDA	AD211	TW5451140	2022/5/14	1Year
Switchgroup	THEDA	ETF-025(VASC6)	TW5451008	N/A	N/A
MIMO Matrix Switch	THEDA	4P5TM18	TW5451009	N/A	N/A
Temperature&Humidity Chamber	ESPEC	EL-02KA	12107166	2021/7/3	1 Year

4.3 DESCRIPTION OF TEST MODES

The EUT has been tested under its typical operating condition.
The EUT configuration for testing is installed on RF field strength measurement to meet the Commissions requirement and operating in a manner which intends to maximize its emission characteristics in a continuous normal application.

The Transmitter was operated in the normal operating mode. The TX frequency was fixed which was for the purpose of the measurements.

Test of channel included the lowest and middle and highest frequency to perform the test, then record on this report.

Those data rates (Bluetooth DTS :1Mbps) were used for all test.

Pre-defined engineering program for regulatory testing used to control the EUT for staying in continuous transmitting and receiving mode is programmed.

Frequency and Channel list for Bluetooth DTS:

Channel	Frequency (MHz)	Channel	Frequency (MHz)	Channel	Frequency (MHz)
0	2402	19	2440	…	…
1	2404	20	2442	37	2476
2	2406	21	2444	38	2478
…	…	…	…	39	2480
Note: fc=2402MHz+k×1MHz k=1 to 39					

Test Frequency and channel for Bluetooth DTS:

Lowest Frequency		Middle Frequency		Highest Frequency	
Channel	Frequency (MHz)	Channel	Frequency (MHz)	Channel	Frequency (MHz)
0	2402	19	2440	39	2480

5 FACILITIES AND ACCREDITATIONS

5.1 FACILITIES

All measurement facilities used to collect the measurement data are located at:

EMTEK (Shenzhen) Co., Ltd.
Building 69, Majialong Industry Zone District, Nanshan District, Shenzhen, China
The sites are constructed in conformance with the requirements of ANSI C63.7, ANSI C63.4 and CISPR Publication 22.

5.2 EQUIPMENT

Radiated emissions are measured with one or more of the following types of linearly polarized antennas: tuned dipole, biconical, log periodic, bi-log, and/or ridged waveguide, horn. Spectrum analyzers with preselectors and quasi-peak detectors are used to perform radiated measurements.

Conducted emissions are measured with Line Impedance Stabilization Networks and EMI Test Receivers.

Calibrated wideband preamplifiers, coaxial cables, and coaxial attenuators are also used for making measurements.

All receiving equipment conforms to CISPR Publication 16-1, “Radio Interference Measuring Apparatus and Measurement Methods.”

5.3 LABORATORY ACCREDITATIONS AND LISTINGS

Site Description		
EMC Lab.	:	**Accredited by CNAS** The Certificate Registration Number is L2291. The Laboratory has been assessed and proved to be in compliance with CNAS-CL01 (identical to ISO/IEC 17025:2017) **Accredited by FCC** Designation Number: CN1204 Test Firm Registration Number: 882943 **Accredited by A2LA** The Certificate Number is 4321.01. Accredited by Industry Canada The Conformity Assessment Body Identifier is CN0008
Name of Firm	:	EMTEK (SHENZHEN) CO., LTD.
Site Location	:	Building 69, Majialong Industry Zone, Nanshan District, Shenzhen, Guangdong, China

6 TEST SYSTEM UNCERTAINTY

The following measurement uncertainty levels have been estimated for tests performed on the apparatus:

Test Parameter	Measurement Uncertainty
Radio Frequency	±1x10^-5
Maximum Peak Output Power Test	±1.0dB
Conducted Emissions Test	±2.0dB
Radiated Emission Test	±2.0dB
Power Density	±2.0dB
Occupied Bandwidth Test	±1.0dB
Band Edge Test	±3dB
All emission, radiated	±3dB
Antenna Port Emission	±3dB
Temperature	±0.5℃
Humidity	±3%

Measurement Uncertainty for a level of Confidence of 95%

7 SETUP OF EQUIPMENT UNDER TEST

7.1 RADIO FREQUENCY TEST SETUP 1

The Bluetoothcomponent's antenna ports(s) of the EUT are connected to the measurement instrument per an appropriate attenuator. The EUT is controlled by PC/software to emit the specified signals for the purpose of measurements.

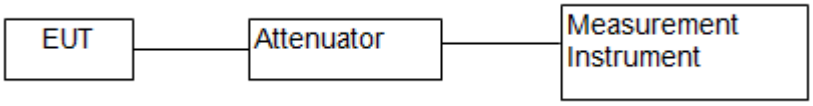

7.2 RADIO FREQUENCY TEST SETUP 2

The test site semi-anechoic chamber has met the requirement of NSA tolerance 4 dB according to the standards: ANSI C63.10. The test distance is 3m.The setup is according to the requirements in Section 13.1.4.1 of ANSI C63.10-2013 and CAN/CSA-CEI/IEC CISPR 22.
The maximal emission value is acquired by adjusting the antenna height, polarisation and turntable azimuth. Normally, the height range of antenna is 1 m to 4 m, the azimuth range of turntable is 0° to 360°, and the receive antenna has two polarizations Vertical (V) and Horizontal (H).

Below 30MHz：
The EUT is placed on a turntable 0.8 meters above the ground in the chamber, 3 meter away from the antenna (loop antenna). The Antenna should be positioned with its plane vertical at the specified distance from the EUT and rotated about its vertical axis for maximum response at each azimuth about the EUT. The center of the loop shall be 1 m above the ground. For certain applications, the loop antenna plane may also need to be positioned horizontally at the specified distance from the EUT.

Above 30MHz：
The EUT is placed on a turntable 0.8 meters above the ground in the chamber, 3 meter away from the antenna. The maximal emission value is acquired by adjusting the antenna height, polarisation and turntable azimuth. Normally, the height range of antenna is 1 m to 4 m, the azimuth range of turntable is 0° to 360°, and the receive antenna has two polarizations Vertical (V) and Horizontal (H).

Above 1GHz:
The EUT is placed on a turntable 1.5 meters above the ground in the chamber, 3 meter away from the antenna. The maximal emission value is acquired by adjusting the antenna height, polarisation and turntable azimuth. Normally, the height range of antenna is 1 m to 4 m, the azimuth range of turntable is 0° to 360°, and the receive antenna has two polarizations Vertical (V) and Horizontal (H).

Measurements shall be taken, using the following steps, at a test site that has been validated using the procedures of ANSI C63.4 or the latest CISPR 16-1-4 for measurements above 1 GHz, so as to simulate a near free-space environment (see RSS-Gen for applicable versions of ANSI and CISPR standards).
(1) Line the ground plane with absorbers between the transmitter and the receive antenna to minimize reflections. The absorbers used should have a minimum-rated attenuation of 20 dB through the measurement frequency range of interest. The absorbers shall be positioned to replicate the layout used when compliance with the applicable acceptability criterion was achieved, as set forth in the aforementioned standards on site validation.
(2) Set the height of the receive antenna to 1.5 m. The receive antenna must be one that was designed and fabricated to operate over the entire frequency range of interest, for example, an appropriate standard gain horn.
(3) The distance between the receive antenna and the radiating source shall be sufficient in order to ensure far-field conditions.
(4) Mount the transmitter at a height of 1.5 m.
(5) Configure the device under test (DUT) to produce the maximum power spectral density as measured while assessing compliance with Section 6.2.2 (i.e. channel frequency, modulation type and data rate). If the DUT is equipped with a detachable antenna and the antenna is intended for remote installation (i.e.

tower-mounted), the DUT may be substituted with a suitable signal generator. The level and frequency settings on the generator shall be set so as to reproduce the maximum power spectral density, measured within a 1 MHz bandwidth, obtained while assessing compliance to Section 6.2.2.
(6) Position the transmitter or the radiating antenna so that elevation pattern measurements can be taken.
(7) Find the 0° reference point in the horizontal plane.
(8) Care should be taken when positioning the receive antenna to avoid cross-polarization. Antennas of known mounting polarization should be assessed with the receive antenna oriented in the same polarity. If the polarization of the transmit antenna is unknown or the transmit antenna can be mounted in either polarization, e.i.r.p. measurements should be performed to find which
mounting polarity provides the highest e.i.r.p. value. Testing shall be carried out with the receive antenna and the DUT mounted in each polarity.
(9) The emission shall be centred on the display of the spectrum analyzer with the following settings:
i. If the power spectral density of the DUT was assessed with a peak detector and the antenna cannot be detached from the DUT, the spectrum analyzer shall be set to a peak detector with a resolution bandwidth and video bandwidth of 1 MHz.
ii. If the power spectral density of the DUT was assessed using a sample detector with power averaging and the antenna cannot be detached from the DUT, the spectrum analyzer shall be set to a sample detector, configured to produce 100 power averages and set with a resolution bandwidth, as well as a video bandwidth of 1 MHz.
iii. If the antenna can be detached from the DUT, a continuous wave (CW) signal equal to that of the power spectral density measurement may be used, the spectrum analyzer shall be set to peak detector with a resolution bandwidth and video bandwidth of 1 MHz.

(10) Rotate the turntable 360° recording the field strength at each step. Throughout the main beam of the antenna, the step size shall be kept to a maximum of 1°.
Once outside the main beam of the antenna, the maximum step size shall be as follows, when compared to the requirements of Section 6.2.2:
i. Between 0° and 8°, maximum step size of 2°;
ii. Between 8° and 40°, maximum step size of 4°;
iii. Between 40° and 45°, maximum step size of 1°;
iv. Between 45° and 90°, maximum step size of 5°.
Once the mask reaches 90°, the mask will be inverted and the step size will follow in the same manner as above.
For the purpose of this procedure, the main beam of the antenna is defined as the 3 dB beamwidth.
(11) Convert the measured field strength values in terms of e.i.r.p. density (dBW/1 MHz) using the following equation:
□ □ □ □ □ □ □ □ e.i.r.p density(dBW/MHz)=10log$((E*r)^2/30)$
E = field strength in V/m
r = measurement distance in metres
(12) Plot the results against the emission mask with reference to the horizontal plane.
(13) Using the plot, the 0° can be rotated to determine the worst-case installation tilt angle.
(14) Testing shall be performed using the highest gain antenna for every antenna type, if applicable.
(15) Antenna type(s), antenna model number(s), and worst-case tilt angle(s) necessary to remain compliant with the elevation mask requirement set forth in Section 6.2.2(3) of RSS-247 shall be clearly indicated in the user manual.
The following figure is an example of a polar elevation mask measured using the Method 1 reference to dBμV/m at 3 m.

(a) Radiated Emission Test Set-Up, Frequency Below 30MHz

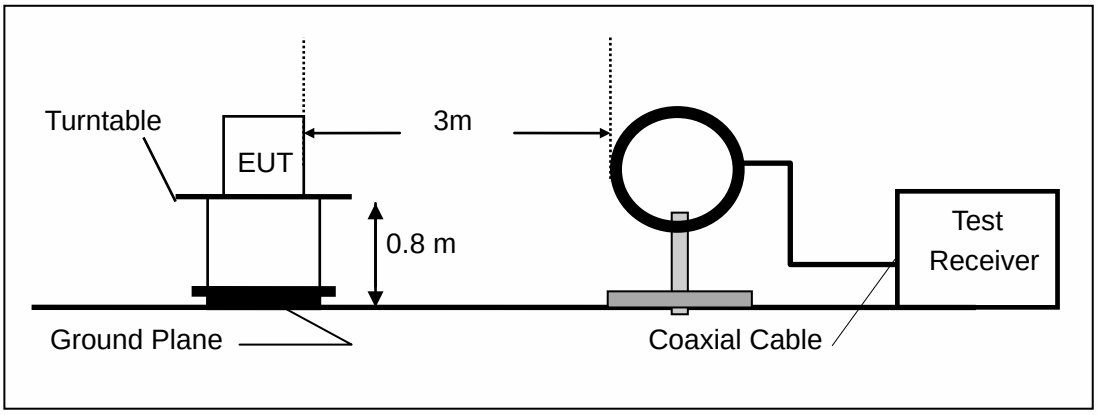

(b) Radiated Emission Test Set-Up, Frequency Below 1000MHz

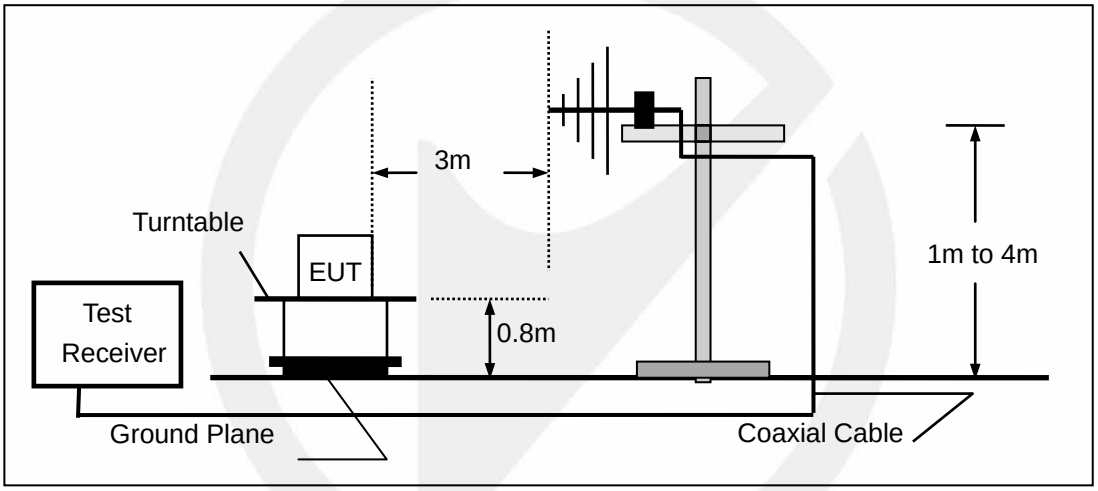

(c) Radiated Emission Test Set-Up, Frequency above 1000MHz

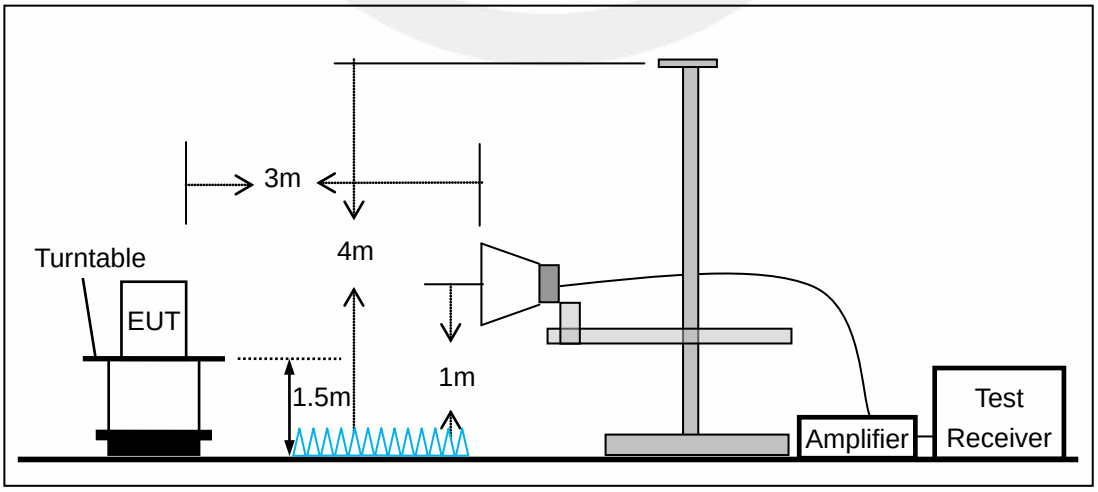

7.3 CONDUCTED EMISSION TEST SETUP

The mains cable of the EUT (maybe per AC/DC Adapter) must be connected to LISN. The LISN shall be placed 0.8 m from the boundary of EUT and bonded to a ground reference plane for LISN mounted on top of the ground reference plane. This distance is between the closest points of the LISN and the EUT. All other units of the EUT and associated equipment shall be at least 0.8m from the LISN.
Ground connections, where required for safety purposes, shall be connected to the reference ground point of the LISN and, where not otherwise provided or specified by the manufacturer, shall be of same length as the mains cable and run parallel to the mains connection at a separation distance of not more than 0.8 m.
According to the requirements in Section 13.1.4.1 of ANSI C63.10-2013 Conducted emissions from the EUT measured in the frequency range between 0.15 MHz and 30 MHz using CISPR Quasi-Peak and average detector mode.

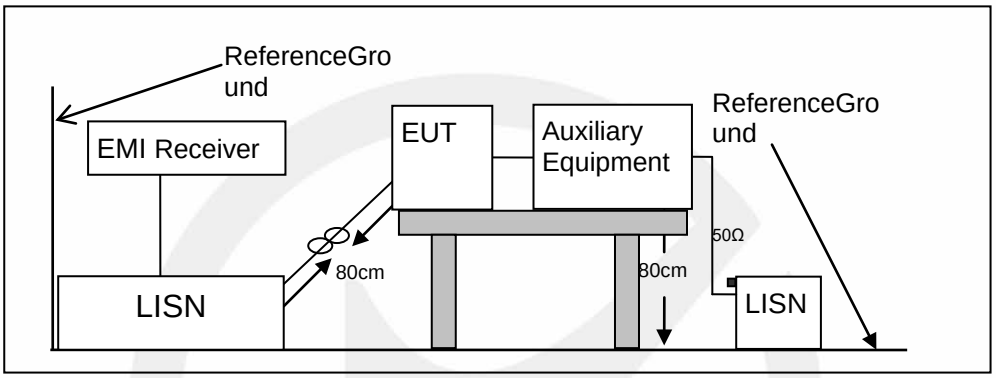

7.4 BLOCK DIAGRAM CONFIGURATION OF TEST SYSTEM

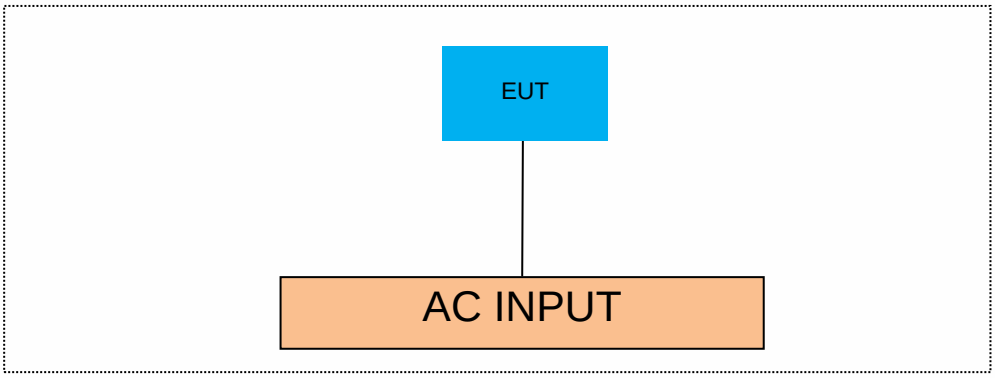

7.5 SUPPORT EQUIPMENT

EUT Cable List and Details			
Cable Description	Length (m)	Shielded/Unshielded	With / Without Ferrite
/	/	/	/

Auxiliary Cable List and Details			
Cable Description	Length (m)	Shielded/Unshielded	With / Without Ferrite
/	/	/	/

Auxiliary Equipment List and Details			
Description	Manufacturer	Model	Serial Number
/	/	/	/

Notes:

1. *All the equipment/cables were placed in the worst-case configuration to maximize the emission during the test.*
2. *Grounding was established in accordance with the manufacturer's requirements and conditions for the intended use.*

7.6 RADIATED SPURIOUS EMISSION

7.6.1 Applicable Standard

According to FCC Part 15.247(d),15.205, 15.209 and KDB 558074 D01 15.247 Meas Guidancev05r02
According to IC RSS-Gen and RSS-247

7.6.2 Conformance Limit

According to FCC Part 15.247(d): radiated emissions which fall in the restricted bands, as defined in §15.205(a), must also comply with the radiated emission limits specified in §15.209(a) (see §15.205(c)).
According to FCC Part15.205, Restricted bands
According to IC RSS-Gen 6.13: radiated emissions which fall in the restricted bands, must also comply with the radiated emission limits.
According to IC RSS-Gen 6.13, Restricted bands

MHz	MHz	MHz	GHz
0.090-0.110	16.42-16.423	399.9-410	4.5-5.15
10.495-0.505	16.69475-16.69525	608-614	5.35-5.46
2.1735-2.1905	16.80425-16.80475	960-1240	7.25-7.75
4.125-4.128	25.5-25.67	1300-1427	8.025-8.5
4.17725-4.17775	37.5-38.25	1435-1626.5	9.0-9.2
4.20725-4.20775	73-74.6	1645.5-1646.5	9.3-9.5
6.215-6.218	74.8-75.2	1660-1710	10.6-12.7
6.26775-6.26825	123-138	2200-2300	14.47-14.5
8.291-8.294	149.9-150.05	2310-2390	15.35-16.2
8.362-8.366	156.52475-156.52525	2483.5-2500	17.7-21.4
8.37625-8.38675	156.7-156.9	2690-2900	22.01-23.12
8.41425-8.41475	162.0125-167.17	3260-3267	23.6-24.0
12.29-12.293	167.72-173.2	3332-3339	31.2-31.8
12.51975-12.52025	240-285	3345.8-3358	36.43-36.5
12.57675-12.57725	322-335.4	3600-4400	(2)
13.36-13.41			

According to FCC Part15.205,the level of any transmitter spurious emission in Restricted bands shall not exceed the level of the emission specified in the following table
According to IC RSS-Gen, the level of any transmitter spurious emission in Restricted bands shall not exceed the level of the emission specified in the following table

Restricted Frequency(MHz)	Field Strength (μV/m)	Field Strength (dBμV/m)	Measurement Distance
0.009-0.490	2400/F(KHz)	20 log (uV/m)	300
0.490-1.705	24000/F(KHz)	20 log (uV/m)	30
1.705-30	30	29.5	30
30-88	100	40	3
88-216	150	43.5	3
216-960	200	46	3
Above 960	500	54	3

7.6.3 Test Configuration

Test according to clause 7.2 radio frequency test setup 2

7.6.4 Test Procedure

This test is required for any spurious emission that falls in a Restricted Band, as defined in Section 15.205. It must be performed with the highest gain of each type of antenna proposed for use with the EUT. Use the following spectrum analyzer settings:
The EUT was placed on a turn table which is 0.8m above ground plane.
Maximum procedure was performed on the highest emissions to ensure EUT compliance.
Span = wide enough to fully capture the emission being measured
RBW = 1 MHz for f ≥ 1 GHz(1GHz to 25GHz), 100 kHz for f < 1 GHz(30MHz to 1GHz)
VBW ≥ RBW
Sweep = auto
Detector function = peak
Trace = max hold
Follow the guidelines in ANSI C63.10-2013 with respect to maximizing the emission by rotating the EUT, measuring the emission while the EUT is situated in three orthogonal planes (if appropriate), adjusting the measurement antenna height and polarization, etc. A pre-amp and a high pass filter are required for this test, in order to provide the measuring system with sufficient sensitivity. Allow the trace to stabilize. The peak reading of the emission, after being corrected by the antenna factor, cable loss, pre-amp gain, etc., is the peak field strength, which must comply with the limit specified in Section 15.35(b). Submit this data.
Now set the VBW to 10 Hz, while maintaining all of the other instrument settings. This peak level, once corrected, must comply with the limit specified in Section 15.209. If the dwell time per channel of the hopping signal is less than 100 ms, then the reading obtained with the 10 Hz VBW may be further adjusted by a “duty cycle correction factor”, derived from 20log(dwell time/100 ms), in an effort to demonstrate compliance with the 15.209 limit. Submit this data.
Repeat above procedures until all frequency measured was complete.

7.6.5 Test Results

Temperature:	22° C
Relative Humidity:	43%
ATM Pressure:	1011 mbar

- Spurious Emission below 30MHz(9KHz to 30MHz)

Freq. (MHz)	Ant.Pol.	Emission Level(dBuV/m)		Limit 3m(dBuV/m)		Over(dB)	
	H/V	PK	AV	PK	AV	PK	AV
--	--	--	--	--	--	--	--

Note: the amplitude of spurious emission that is attenuated by more than 20dB below the permissible limit has no need to be reported.
Distance extrapolation factor =40log(Specific distance/ test distance)(dB);
Limit line=Specific limits(dBuV) + distance extrapolation factor

■ Spurious Emission Above 1GHz(1GHz to 25GHz)

All the antenna(Antenna 1) and modes(BLE_1M) mode have been tested, and the worst(Antenna 1,BLE_1M) resultrecorded was report as below:

Test mode: BLE_1M Frequency: Channel 0: 2402MHz

Freq. (MHz)	Ant.Pol.	Emission Level(dBuV/m)		Limit 3m(dBuV/m)		Over(dB)	
	H/V	PK	AV	PK	AV	PK	AV
4803.416	V	52.36	34.36	74.00	54.00	-21.64	-19.64
9787.259	V	56.26	38.29	74.00	54.00	-17.74	-15.71
17914.36	V	69.14	51.33	74.00	54.00	-4.86	-2.67
4804.805	H	51.11	33.19	74.00	54.00	-22.89	-20.81
9347.645	H	55.95	38.92	74.00	54.00	-18.05	-15.08
17898.83	H	69.88	51.88	74.00	54.00	-4.12	-2.12

Test mode: BLE_1M Frequency: Channel 19: 2440MHz

Freq. (MHz)	Ant.Pol.	Emission Level(dBuV/m)		Limit 3m(dBuV/m)		Over(dB)	
	H/V	PK	AV	PK	AV	PK	AV
4880.386	V	50.01	32.11	74.00	54.00	-23.99	-21.89
10035.04	V	56.57	38.52	74.00	54.00	-17.43	-15.48
17986.99	V	70.03	52.01	74.00	54.00	-3.97	-1.99
4879.681	H	50.62	44.0	74.00	54.00	-23.38	-10.00
9351.699	H	56.36	48.33	74.00	54.00	-17.64	-5.67
17986.99	H	69.47	51.42	74.00	54.00	-4.53	-2.58

Test mode: BLE_1M Frequency: Channel 39: 2480MHz

Freq. (MHz)	Ant.Pol.	Emission Level(dBuV/m)		Limit 3m(dBuV/m)		Over(dB)	
	H/V	PK	AV	PK	AV	PK	AV
4959.307	V	47.84	30.16	74.00	54.00	-26.16	-23.84
8687.225	V	54.30	36.29	74.00	54.00	-19.70	-17.71
17854.91	V	69.52	51.44	74.00	54.00	-4.48	-2.56
4960.023	H	49.37	31.33	74.00	54.00	-24.63	-22.67
9390.975	H	55.05	38.03	74.00	54.00	-18.95	-15.97
17906.59	H	69.69	51.62	74.00	54.00	-4.31	-2.38

Note: (1) All Readings are Peak Value (VBW=3MHz) and Average Value (VBW=10Hz).
(2) Emission Level= Reading Level+Correct Factor.
(3) Correct Factor= Ant_F + Cab_L– Preamp
(4) The reading of emissions are attenuated more than 20dB below the permissible limits or the field strength is too small to be measured.

■ Spurious Emission in Restricted Band 2310-2390MHz and 2483.5-2500MHz

All the antenna(Antenna 1) and modes(BLE_1M) mode have been tested, and the worst(Antenna 1,BLE_1M) resultrecorded was report as below:

Test mode:	BLE_1M	Frequency:	Channel 0: 2402MHz

Frequency (MHz)	Polarity	PK(dBuV/m) (VBW=3MHz)	Limit 3m (dBuV/m)	AV(dBuV/m) (VBW=10Hz)	Limit 3m (dBuV/m)
2387.416	H	51.21	74.00	33.42	54.00
2388.496	V	52.73	74.00	34.29	54.00

Test mode:	BLE_1M	Frequency:	Channel 39: 2480MHz

Frequency (MHz)	Polarity	PK(dBuV/m) (VBW=3MHz)	Limit 3m (dBuV/m)	AV(dBuV/m) (VBW=10Hz)	Limit 3m (dBuV/m)
2483.539	H	50.90	74.00	32.69	54.00
2484.497	V	52.05	74.00	34.26	54.00

Note: (1) All Readings are Peak Value (VBW=3MHz) and Average Value (VBW=10Hz).
(2) Emission Level= Reading Level+Correct Factor.
(3) Correct Factor= Ant_F + Cab_L - Preamp
(4) The reading of emissions are attenuated more than 20dB below the permissible limits or the field strength is too small to be measured.

Test Model	Spurious Emission in Restricted Band 2310-2390MHz Channel 0: 2402MHz BLE_1M H

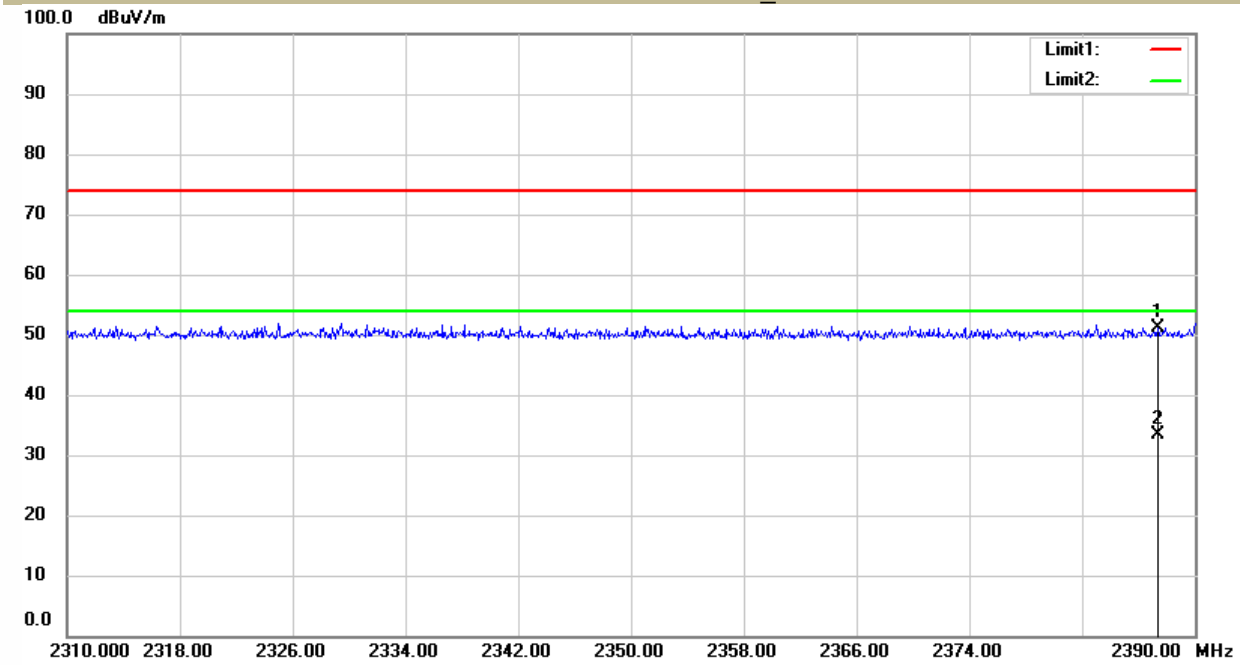

Test Model	Spurious Emission in Restricted Band2310-2390MHz Channel 0: 2402MHz BLE_1M V

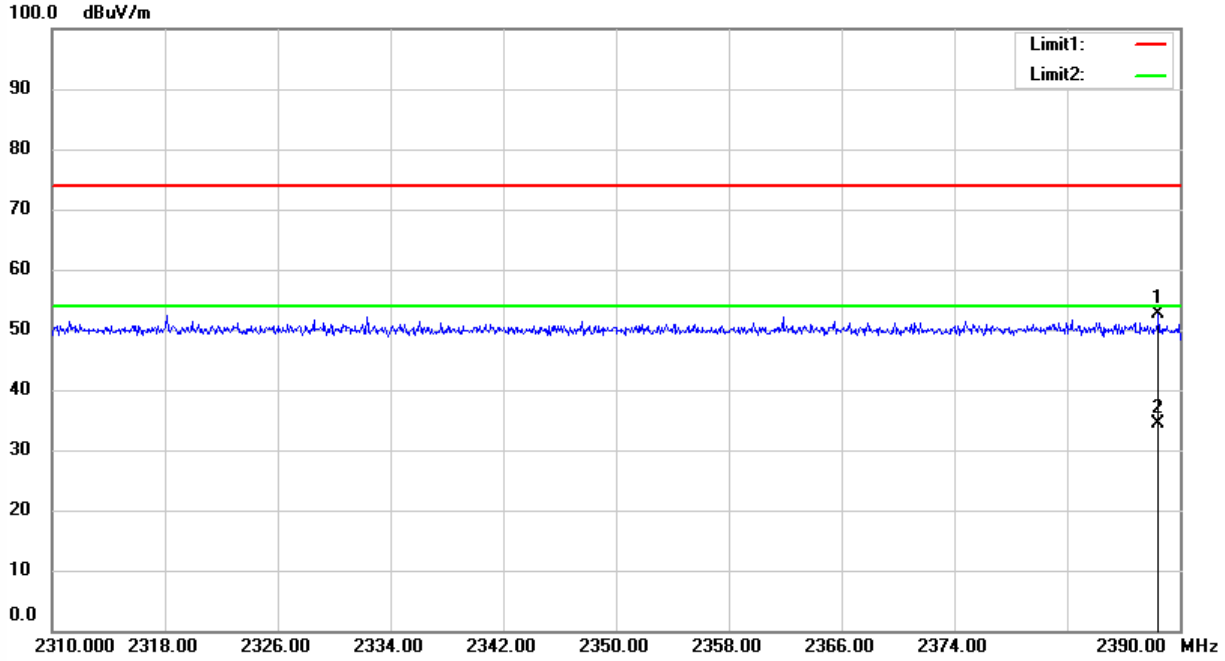

Test Model	Spurious Emission in Restricted Band2483.5-2500MHz Channel 39: 2480MHz BLE_1M H

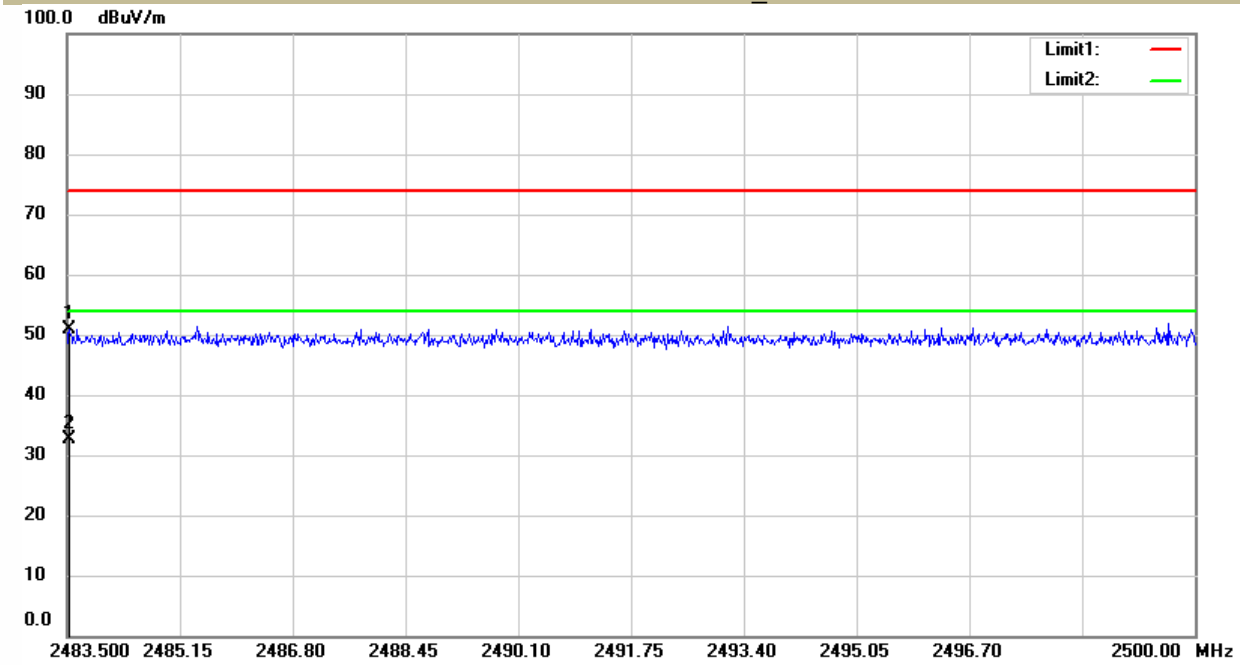

Test Model	Spurious Emission in Restricted Band 2483.5-2500MHz Channel 39: 2480MHz BLE_1M V

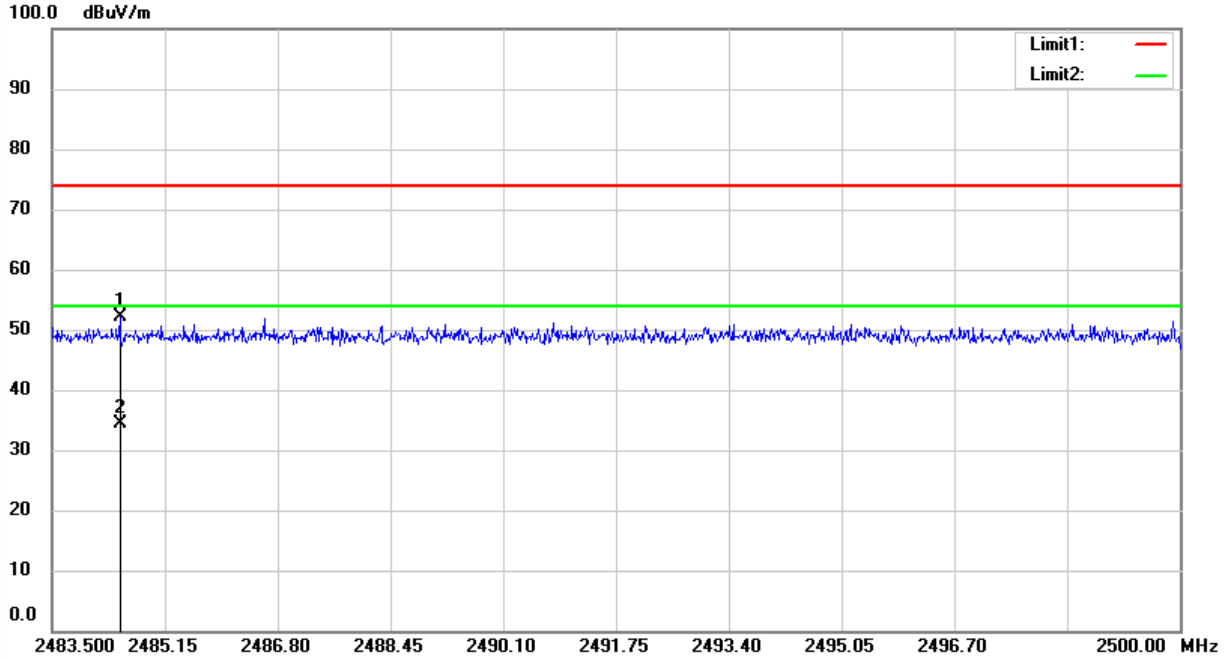

■ Spurious Emission below 1GHz(30MHz to 1GHz)

All the antenna(Antenna 1) and modes(BLE_1M) mode have been tested, and the worst(Antenna 1,BLE_1M) resultrecorded was report as below:

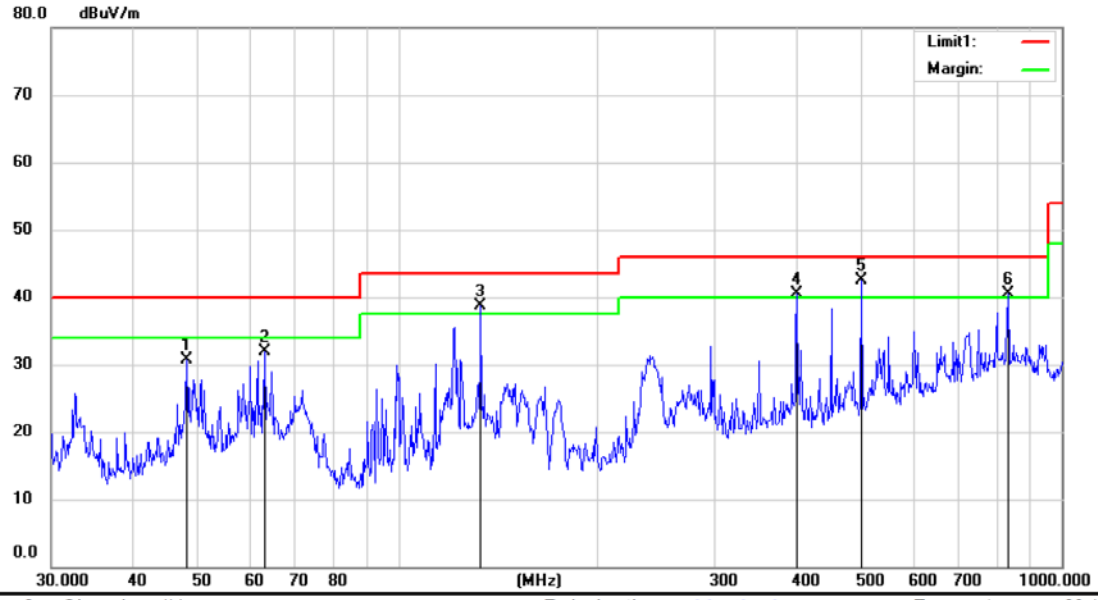

Site 3m Chamber #1 Polarization: *Vertical* Temperature: 28.1 C

Limit: (RE)FCC PART 15 CLASS B Power: AC 120V/60Hz Humidity: 43 %

Mode:BLE 2402

Note:

No.	Mk.	Freq.	Reading Level	Correct Factor	Measure-ment	Limit	Over		Antenna Height	Table Degree	
		MHz	dBuV	dB	dBuV/m	dBuV/m	dB	Detector	cm	degree	Comment
1		47.9940	43.22	-12.52	30.70	40.00	-9.30	QP			
2		63.0087	43.98	-12.06	31.92	40.00	-8.08	QP			
3	!	133.2680	52.98	-14.21	38.77	43.50	-4.73	QP			
4	!	400.0810	46.88	-6.35	40.53	46.00	-5.47	QP			
5	*	500.0818	47.38	-4.93	42.45	46.00	-3.55	QP			
6	!	832.5870	37.99	2.54	40.53	46.00	-5.47	QP			

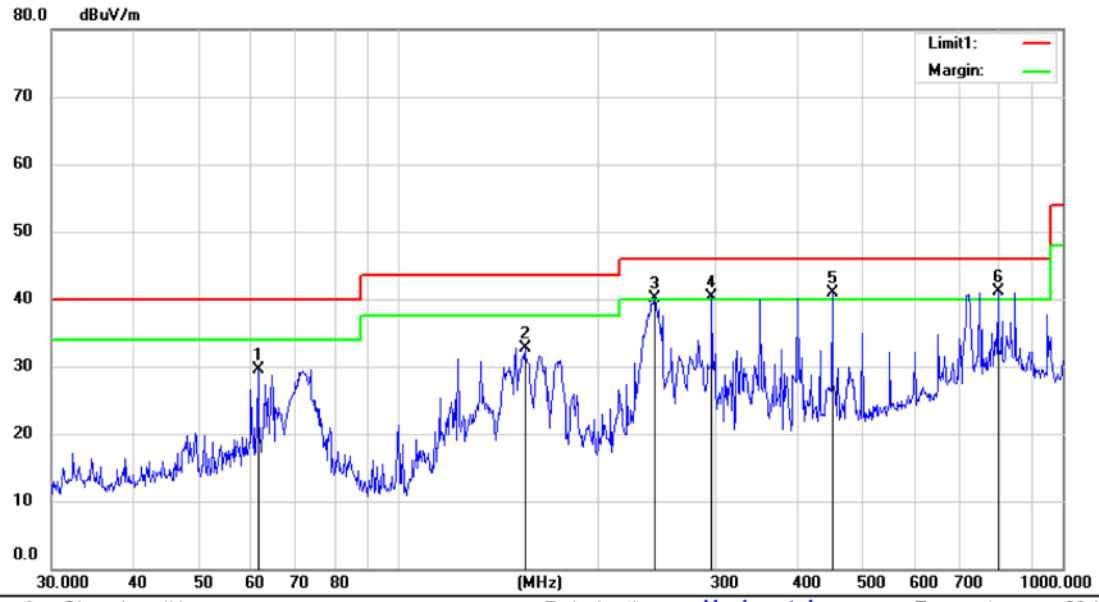

Site 3m Chamber #1 Polarization: ***Horizontal*** Temperature: 28.1 C

Limit: (RE)FCC PART 15 CLASS B Power: AC 120V/60Hz Humidity: 43 %

Mode:BLE 2402

Note:

No.	Mk.	Freq.	Reading Level	Correct Factor	Measure-ment	Limit	Over		Antenna Height	Table Degree	
		MHz	dBuV	dB	dBuV/m	dBuV/m	dB	Detector	cm	degree	Comment
1		61.4810	41.59	-12.02	29.57	40.00	-10.43	QP			
2		155.0242	46.72	-13.92	32.80	43.50	-10.70	QP			
3	!	242.9510	52.09	-12.03	40.06	46.00	-5.94	QP			
4	!	297.0938	49.44	-9.16	40.28	46.00	-5.72	QP			
5	!	450.1474	46.62	-5.75	40.87	46.00	-5.13	QP			
6	*	800.0310	39.11	1.97	41.08	46.00	-4.92	QP			

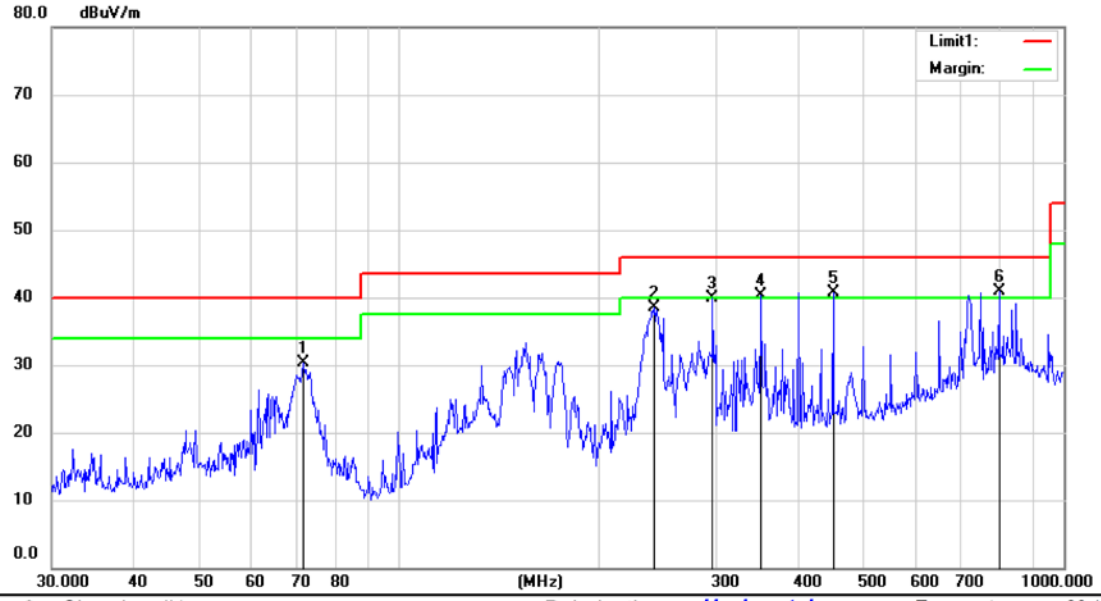

Site 3m Chamber #1 Polarization: ***Horizontal*** Temperature: 28.1 C

Limit: (RE)FCC PART 15 CLASS B Power: AC 120V/60Hz Humidity: 43 %

Mode:BLE 2440

Note:

No.	Mk.	Freq.	Reading Level	Correct Factor	Measure-ment	Limit	Over		Antenna Height	Table Degree	
		MHz	dBuV	dB	dBuV/m	dBuV/m	dB	Detector	cm	degree	Comment
1		71.6434	43.85	-13.50	30.35	40.00	-9.65	QP			
2		241.7823	50.60	-12.08	38.52	46.00	-7.48	QP			
3		297.0938	49.08	-9.16	39.92	46.00	-6.08	QP			
4	!	351.0918	47.90	-7.64	40.26	46.00	-5.74	QP			
5	!	450.1474	46.52	-5.75	40.77	46.00	-5.23	QP			
6	*	800.0310	38.99	1.97	40.96	46.00	-5.04	QP			

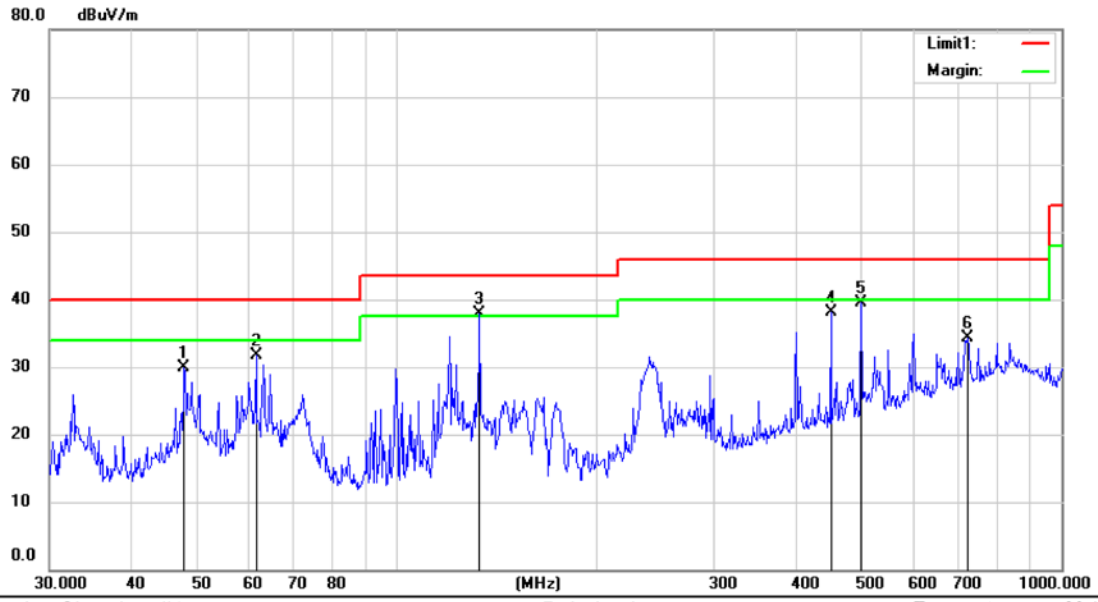

Site 3m Chamber #1 Polarization: ***Vertical*** Temperature: 28.1 C

Limit: (RE)FCC PART 15 CLASS B Power: AC 120V/60Hz Humidity: 43 %

Mode:BLE 2440

Note:

No.	Mk.	Freq.	Reading Level	Correct Factor	Measure-ment	Limit	Over		Antenna Height	Table Degree	
		MHz	dBuV	dB	dBuV/m	dBuV/m	dB	Detector	cm	degree	Comment
1		47.9730	42.52	-12.52	30.00	40.00	-10.00	QP			
2		61.5080	43.63	-12.02	31.61	40.00	-8.39	QP			
3	*	133.2680	52.15	-14.21	37.94	43.50	-5.56	QP			
4		450.1474	43.89	-5.75	38.14	46.00	-7.86	QP			
5		500.0818	44.51	-4.93	39.58	46.00	-6.42	QP			
6		722.9924	34.56	-0.34	34.22	46.00	-11.78	QP			

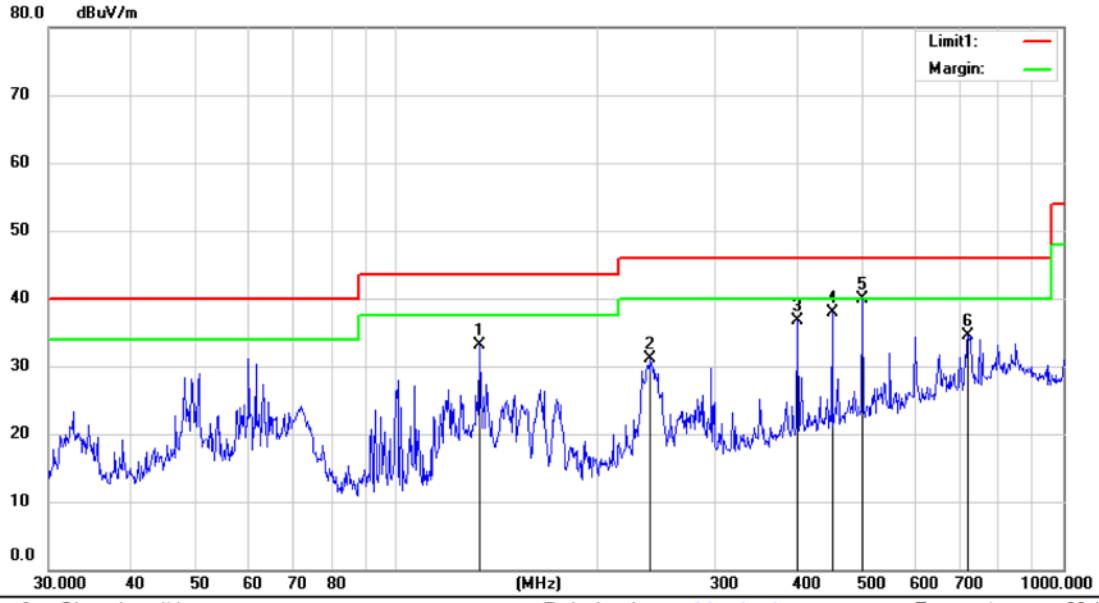

Site 3m Chamber #1 Polarization: *Vertical* Temperature: 28.1 C

Limit: (RE)FCC PART 15 CLASS B Power: AC 120V/60Hz Humidity: 43 %

Mode:BLE 2480

Note:

No.	Mk.	Freq.	Reading Level	Correct Factor	Measure-ment	Limit	Over		Antenna Height	Table Degree	
		MHz	dBuV	dB	dBuV/m	dBuV/m	dB	Detector	cm	degree	Comment
1		133.0927	47.31	-14.21	33.10	43.50	-10.40	QP			
2		239.9873	43.17	-12.16	31.01	46.00	-14.99	QP			
3		400.0810	43.00	-6.35	36.65	46.00	-9.35	QP			
4		450.1474	43.63	-5.75	37.88	46.00	-8.12	QP			
5	*	500.0818	44.88	-4.93	39.95	46.00	-6.05	QP			
6		719.5148	34.97	-0.44	34.53	46.00	-11.47	QP			

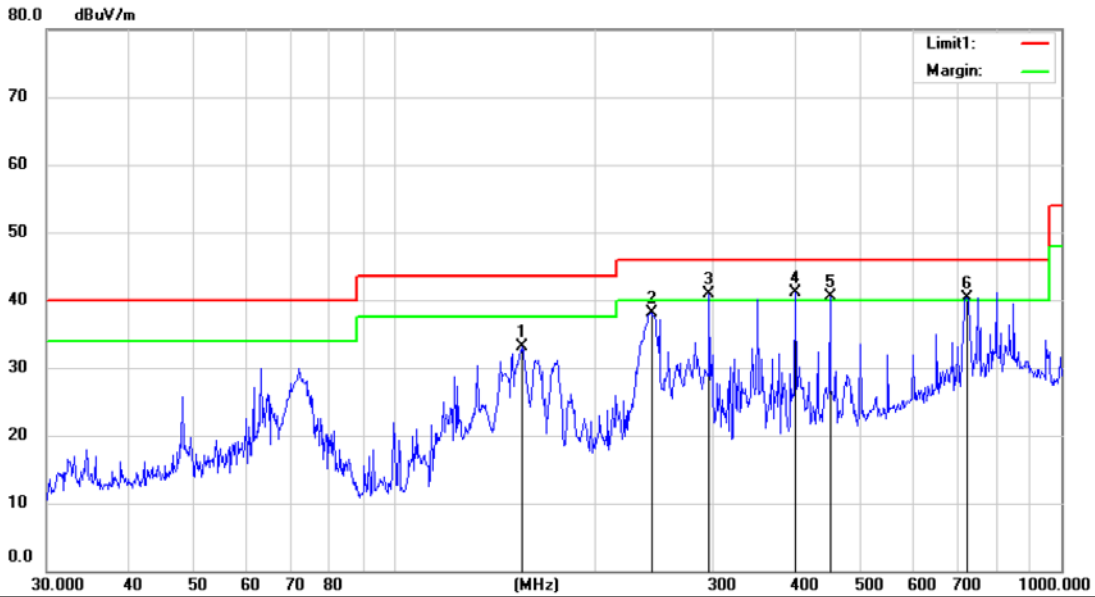

Site 3m Chamber #1 Polarization: ***Horizontal*** Temperature: 28.1 C

Limit: (RE)FCC PART 15 CLASS B Power: AC 120V/60Hz Humidity: 43 %

Mode:BLE 2480

Note:

No.	Mk.	Freq.	Reading Level	Correct Factor	Measure-ment	Limit	Over		Antenna Height	Table Degree	
		MHz	dBuV	dB	dBuV/m	dBuV/m	dB	Detector	cm	degree	Comment
1		155.6370	47.08	-13.92	33.16	43.50	-10.34	QP			
2		242.9510	50.17	-12.03	38.14	46.00	-7.86	QP			
3	!	297.0938	50.02	-9.16	40.86	46.00	-5.14	QP			
4	*	400.0810	47.37	-6.35	41.02	46.00	-4.98	QP			
5	!	450.1474	46.18	-5.75	40.43	46.00	-5.57	QP			
6	!	722.0423	40.76	-0.37	40.39	46.00	-5.61	QP			

7.7 CONDUCTED EMISSIONS TEST

7.7.1 Applicable Standard

According to FCC Part 15.207(a)
According to IC RSS-Gen 8.8

7.7.2 Conformance Limit

Conducted Emission Limit		
Frequency(MHz)	Quasi-peak	Average
0.15-0.5	66-56	56-46
0.5-5.0	56	46
5.0-30.0	60	50

Note: 1. The lower limit shall apply at the transition frequencies
2. The limit decreases in line with the logarithm of the frequency in the range of 0.15 to 0.50MHz.

7.7.3 Test Configuration

Test according to clause 7.3 conducted emission test setup

7.7.4 Test Procedure

The EUT was placed on a table which is 0.8m above ground plane.
Maximum procedure was performed on the highest emissions to ensure EUT compliance.
Repeat above procedures until all frequency measured were complete.

7.7.5 Test Results

Pass

The AC120V &240V voltage have been tested, and the worst result recorded was report as below:

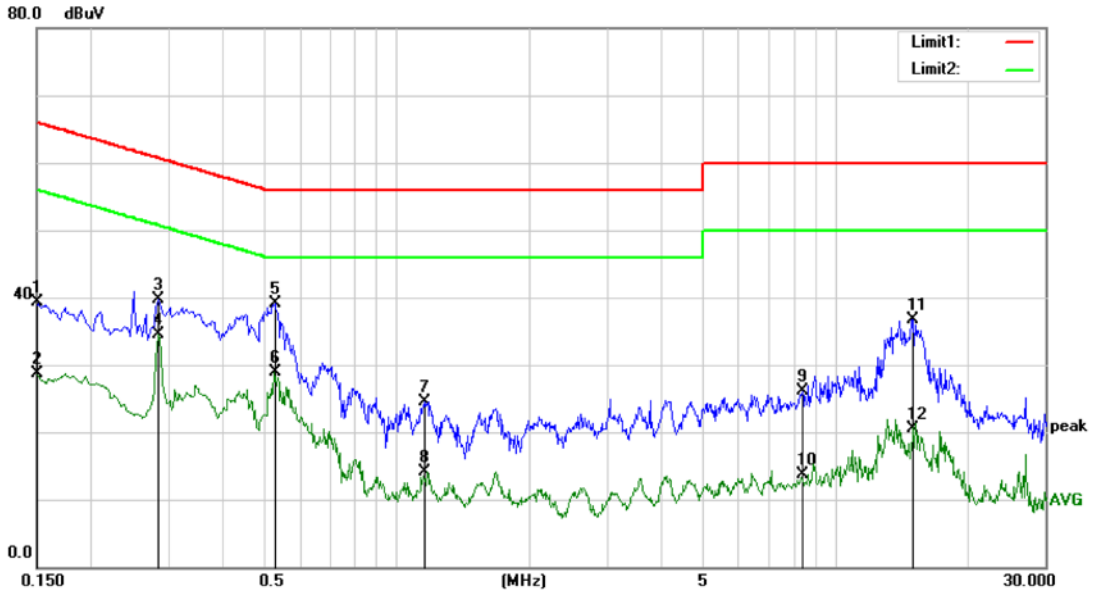

Site Conduction #2 Phase: N Temperature: 24.4 C

Limit: (CE)FCC PART 15 class B_QP Power: AC 120V/60Hz Humidity: 52 %

Mode: BLE mode

Note:

No.	Mk.	Freq.	Reading Level	Correct Factor	Measure-ment	Limit	Over		
		MHz	dBuV	dB	dBuV	dBuV	dB	Detector	Comment
1		0.1500	28.83	10.48	39.31	66.00	-26.69	QP	
2		0.1500	18.27	10.48	28.75	56.00	-27.25	AVG	
3		0.2860	29.36	10.40	39.76	60.64	-20.88	QP	
4	*	0.2860	24.12	10.40	34.52	50.64	-16.12	AVG	
5		0.5260	28.76	10.35	39.11	56.00	-16.89	QP	
6		0.5260	18.61	10.35	28.96	46.00	-17.04	AVG	
7		1.1580	14.17	10.40	24.57	56.00	-31.43	QP	
8		1.1580	3.78	10.40	14.18	46.00	-31.82	AVG	
9		8.3820	15.35	10.69	26.04	60.00	-33.96	QP	
10		8.3820	3.01	10.69	13.70	50.00	-36.30	AVG	
11		14.9940	26.06	10.70	36.76	60.00	-23.24	QP	
12		14.9940	9.90	10.70	20.60	50.00	-29.40	AVG	

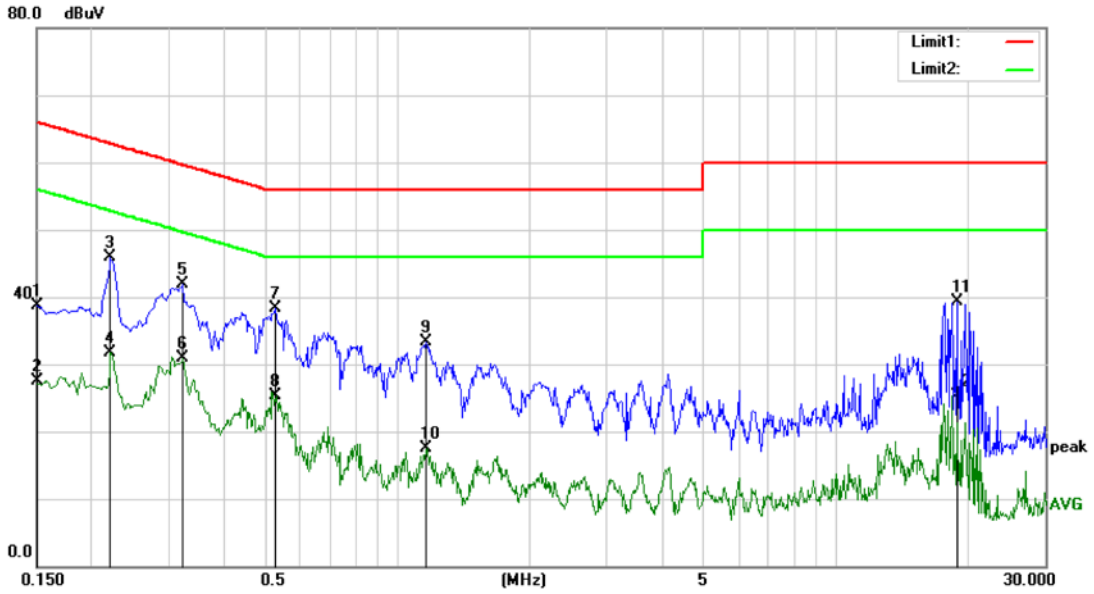

Site Conduction #2 Phase: *L1* Temperature: 24.4 C

Limit: (CE)FCC PART 15 class B_QP Power: AC 120V/60Hz Humidity: 52 %

Mode: BLE mode

Note:

No.	Mk.	Freq.	Reading Level	Correct Factor	Measure-ment	Limit	Over		
		MHz	dBuV	dB	dBuV	dBuV	dB	Detector	Comment
1		0.1500	28.20	10.48	38.68	66.00	-27.32	QP	
2		0.1500	17.10	10.48	27.58	56.00	-28.42	AVG	
3	*	0.2220	35.43	10.42	45.85	62.74	-16.89	QP	
4		0.2220	21.30	10.42	31.72	52.74	-21.02	AVG	
5		0.3234	31.43	10.39	41.82	59.62	-17.80	QP	
6		0.3234	20.44	10.39	30.83	49.62	-18.79	AVG	
7		0.5260	27.86	10.35	38.21	56.00	-17.79	QP	
8		0.5260	14.97	10.35	25.32	46.00	-20.68	AVG	
9		1.1620	22.82	10.40	33.22	56.00	-22.78	QP	
10		1.1620	7.08	10.40	17.48	46.00	-28.52	AVG	
11		18.8580	28.61	10.74	39.35	60.00	-20.65	QP	
12		18.8580	14.54	10.74	25.28	50.00	-24.72	AVG	

Detail of Factor For Radiated Emission

Frequency(MHz)	Ant_F(dB)	Cab_L(dB)	Preamp(dB)	Correct Factor(dB)
0.009	20.6	0.03	\	20.63
0.15	20.7	0.1	\	20.8
1	20.9	0.15	\	21.05
10	20.1	0.28	\	20.38
30	18.8	0.45	\	19.25
30	11.7	0.62	27.9	-15.58
100	12.5	1.02	27.8	-14.28
300	12.9	1.91	27.5	-12.69
600	19.2	2.92	27	-4.88
800	21.1	3.54	26.6	-1.96
1000	22.3	4.17	26.2	0.27
1000	25.6	1.76	41.4	-14.04
3000	28.9	3.27	43.2	-11.03
5000	31.1	4.2	44.6	-9.3
8000	36.2	5.95	44.7	-2.55
10000	38.4	6.3	43.9	0.8
12000	38.5	7.14	42.3	3.34
15000	40.2	8.15	41.4	6.95
18000	45.4	9.02	41.3	13.12
18000	37.9	1.81	47.9	-8.19
21000	37.9	1.95	48.7	-8.85
25000	39.3	2.01	42.8	-1.49
28000	39.6	2.16	46.0	-4.24
31000	41.2	2.24	44.5	-1.06
34000	41.5	2.29	46.6	-2.81
37000	43.8	2.30	46.4	-0.3
40000	43.2	2.50	42.2	3.5

--------- END OF REPORT --------