TEST REPORT

Product Name : Nio-PoE
Model Number : Nio-PoE
FCC ID : 2AWLO-NIO-POE

Prepared for : Kuna Systems Corporation
Address : 1900 S Norfolk St Ste 350 San Mateo California United States 94403

Prepared by : EMTEK (SHENZHEN) CO., LTD.
Address : Building 69, Majialong Industry Zone,Nanshan District, Shenzhen, Guangdong, China

Tel: (0755) 26954280
Fax: (0755) 26954282

Report Number : ENS2305040038W00103R
Date(s) of Tests : May 4, 2023 to June 7, 2023
Date of issue : June 7, 2023

1 TEST RESULT CERTIFICATION

Applicant	:	Kuna Systems Corporation
Address	:	1900 S Norfolk St Ste 350 San Mateo California United States 94403
Manufacturer	:	Kuna Systems Corporation
Address	:	1900 S Norfolk St Ste 350 San Mateo California United States 94403
EUT	:	NiO-PoE
Model Name	:	Nio-PoE
Trademark	:	iDter

Measurement Procedure Used:

APPLICABLE STANDARDS	
STANDARD	**TEST RESULT**
FCC 47 CFR Part 2, Subpart J FCC 47 CFR Part 15, Subpart E	**PASS**
IC RSS-GEN, Issue 5(04-2018)+A1(03-2019)+A2(02-2021) IC RSS-247 Issue 2(02-2017)	**PASS**

The above equipment was tested by EMTEK (SHENZHEN) CO., LTD. The test data, data evaluation, test procedures, and equipment configurations shown in this report were made in accordance with the procedures given in ANSI C63.10 (2013) and the energy emitted by the sample EUT tested as described in this report is in compliance with the requirements of FCC Rules Part 2, Part 15.407, IC RSS-247 Issue 2 and IC RSS-GEN, Issue 5.

The test results of this report relate only to the tested sample identified in this report.

Date of Test : May 4, 2023 to June 7, 2023

Prepared by : Luo peiye /Editor

Reviewer : Joe Xia/Supervisor

Approve & Authorized Signer : Lisa Wang/Manager

Modified History

Version	Report No.	Revision Date	Summary
Ver.1.0	ENS2305040038W00103R	/	Original Report

TABLE OF CONTENTS

1 TEST RESULT CERTIFICATION 2

2 EUT TECHNICAL DESCRIPTION 5

3 SUMMARY OF TEST RESULT 7

4 TEST METHODOLOGY 8

4.1 GENERAL DESCRIPTION OF APPLIED STANDARDS 8
4.2 MEASUREMENT EQUIPMENT USED 8
4.3 DESCRIPTION OF TEST MODES 10

5 FACILITIES AND ACCREDITATIONS 14

5.1 FACILITIES 14
5.2 EQUIPMENT 14
5.3 LABORATORY ACCREDITATIONS AND LISTINGS 14

6 TEST SYSTEM UNCERTAINTY 15

7 SETUP OF EQUIPMENT UNDER TEST 16

7.1 RADIO FREQUENCY TEST SETUP 16
7.2 RADIO FREQUENCY TEST SETUP 16
7.3 CONDUCTED EMISSION TEST SETUP 18
7.4 BLOCK DIAGRAM CONFIGURATION OF TEST SYSTEM 19
7.5 SUPPORT EQUIPMENT 19

8 TEST REQUIREMENTS 20

8.1 BANDWIDTH MEASUREMENT 20
8.2 MAXIMUM CONDUCTED OUTPUT POWER 94
8.3 MAXIMUM PEAK POWER DENSITY 160
8.4 UNDESIRABLE RADIATED SPURIOUS EMISSION 194
8.5 POWER LINE CONDUCTED EMISSIONS 223
8.6 ANTENNA APPLICATION 226

2 EUT TECHNICAL DESCRIPTION

Characteristics	Description
Product:	Nio-PoE
Model Number:	Nio-PoE
Sample Number:	2#
Wifi Type:	Wifi 5G with 5150MHz-5250MHz Band Wifi 5G with 5250MHz-5350MHz Band Wifi 5G with 5470MHz-5725MHz Band Wifi 5G with 5725MHz-5850MHz Band
WLAN Supported:	802.11a/n/ac
Data Rate :	802.11a: 54/48/36/24/18/12/9/6Mbps 802.11n: MCS0-MCS7 802.11ac: MCS0-MCS9
Modulation:	OFDM with BPSK/QPSK/16QAM/64QAM for 802.11a/n OFDM with BPSK/QPSK/16QAM/64QAM/256QAM for 802.11ac
Frequency Range:	UNII-1: 5150MHz-5250MHz Band 5180-5240MHz for 802.11a/n(HT20)/ac(VHT20); 5190-5230MHz for 802.11n(HT40)/ac(VHT40); 5210MHz for 802.11ac(VHT80);
	UNII-2A: 5250MHz-5350MHz Band 5260-5320MHz for 802.11a/n(HT20)/ac(VHT20); 5270-5310MHz for 802.11n(HT40)/ac(VHT40); 5290MHz for 802.11ac(VHT80);
	UNII-2C: 5470MHz-5725MHz Band 5500-5700MHz for 802.11a/n(HT20)/ac(VHT20); 5510-5670MHz for 802.11n(HT40)/ac(VHT40); 5530MHz for 802.11ac(VHT80);
	UNII-3 with 5725MHz-5850MHz Band 5745-5825MHz for 802.11a/n(HT20)/ac(VHT20); 5755-5795MHz for 802.11n(HT40)/ac(VHT40); 5775MHz for 802.11ac(VHT80);
TPC Function:	Not Applicable
Antenna Port:	☒Antenna port 1, ☒Antenna port 2
Antenna Type:	☒ANT 1: FPC Antenna ☒ANT 2: External Antenna
Antenna Gain:	☒ANT 1: 2.83 dBi ☒ANT 2: 1.81 dBi

Transmit Power:	UNII-1 Band: 15.82 dBm UNII-2A Band: 14.85 dBm UNII-2C Band: 14.39 dBm UNII-3 Band: 14.07 dBm
Power Supply:	54V from POE
POE:	Model:TPE-319GI/A 10G PoE++Injector Power Input Range: 100-240, 50Hz/60Hz, 2.0A max PoE Output: 54V, 1.67A
Test Voltage:	AC 120V/60Hz
Date of Received:	May 4, 2023
Temperature Range:	-40°C ~ +45°C
Note:1. for more details, please refer to the User's manual of the EUT. *2. Equipment with 2 diversity antennas but only 1 antenna active at any moment in time.*	

3 SUMMARY OF TEST RESULT

FCC PartClause	IC Part Clause	Test Parameter	Verdict	Remark
15.407 (a) 15.407 (e) 2.1049	RSS-247, 6.2 RSS-Gen 6.7	99% , 6dB and 26dB Bandwidth	PASS	
15.407 (a)	RSS-247, 6.2	Maximum Conducted Output Power	PASS	
15.407 (a)	RSS-247, 6.2	PeakPower Spectral Density	PASS	
15.407 (b) 15.209 15.205	RSS-247, 6.2 RSS-Gen 8.9 RSS-Gen 8.10 RSS-Gen 6.13	RadiatedSpurious Emission	PASS	
15.207	RSS-Gen 8.8	Power Line Conducted Emission	PASS	
15.407(a) 15.203	RSS-Gen 6.8	Antenna Application	PASS	
NOTE1:N/A (Not Applicable) NOTE2:According to FCC OET KDB 789033, the report use radiated measurements in the restricted frequency bands. In addition, the radiated test is also performed to ensure the emissions emanating from the device cabinet also comply with the applicable limits.				

RELATED SUBMITTAL(S) / GRANT(S):

This submittal(s) (test report) is intended for **FCC ID: 2AWLO-NIO-POE** filing to comply with Section 15.247 of the FCC Part 15, Subpart C Rules.

4 TEST METHODOLOGY

4.1 GENERAL DESCRIPTION OF APPLIED STANDARDS

According to its specifications, the EUT must comply with the requirements of the following standards:
FCC 47 CFR Part 2, Subpart J
FCC 47 CFR Part 15, Subpart E
IC RSS-GEN, Issue 5(04-2018)+A1(03-2019)+A2(02-2021)
IC RSS-247 Issue 2(02-2017)
FCC KDB 662911 D01 Multiple Transmitter Output v02r01
FCC KDB 789033 D2 General UNII Test Procedures New Rules v02r01

4.2 MEASUREMENT EQUIPMENT USED

Conducted Emission Test Equipment

Equipment	Manufacturer	Model No.	Serial No.	Last Cal.	Cal. Interval
EMI Test Receiver	Rohde & Schwarz	ESCI	101384	2022/5/14	1Year
AMN	Rohde & Schwarz	ENV216	101161	2022/5/14	1Year
AMN	Kyoritsu	KNW-407	8-1492-9	2022/5/15	1Year

Equipment	Manufacturer	Model No.	Serial No.	Last Cal.	Cal. Interval
EMI Test Receiver	Rohde & Schwarz	ESCI	101384	2023/5/13	1Year
AMN	Rohde & Schwarz	ENV216	101161	2023/5/13	1Year
AMN	Kyoritsu	KNW-407	8-1492-9	2023/5/11	1Year

For Spurious Emissions Test

Equipment	Manufacturer	Model No.	Serial No.	Last Cal.	Cal. Interval
Pre-Amplifier	Bonn	BLMA 011001N	2213967A	2022/10/31	1Year
EMI Test Receiver	Rohde & Schwarz	ESR7	102551	2022/10/31	1Year
Bilog Antenna	Schwarzbeck	VULB9163	9163142	2022/7/24	2Year
Horn antenna	Schwarzbeck	BBHA9120D	9120D-1198	2021/6/15	2Year
Pre-Amplifier	Bonn	BLMA 0118-5G	2213967B-01	2022/10/31	1Year
Spectrum Analyzer	Rohde & Schwarz	FSV3044	101290	2022/10/31	1Year
Horn antenna	Schwarzbeck	BBHA9170	9170-399	2021/6/12	2Year
Pre-Amplifier	Lunar EM	LNA18G26-40	J1012131010001	2022/5/14	1Year
Pre-Amplifier	Lunar EM	LNA26G40-40	J1013131028001	2022/5/14	1Year
Loop Antenna	Schwarzbeck	FMZB1519	1519-012	2021/6/12	2Year
Band reject Filter(50dB)	WI/DE	WRCGV-2400(2400-2485MHz)	2	2022/5/15	1 Year

Equipment	Manufacturer	Model No.	Serial No.	Last Cal.	Cal. Interval
Pre-Amplifier	Bonn	BLMA 011001N	2213967A	2022/10/31	1Year
EMI Test Receiver	Rohde & Schwarz	ESR7	102551	2022/10/31	1Year

Bilog Antenna	Schwarzbeck	VULB9163	9163142	2022/7/24	2 Year
Horn antenna	Schwarzbeck	BBHA9120D	9120D-1198	2021/6/15	2 Year
Pre-Amplifier	Bonn	BLMA 0118-5G	2213967B-01	2022/10/31	1Year
Spectrum Analyzer	Rohde & Schwarz	FSV3044	101290	2022/10/31	1Year
Horn antenna	Schwarzbeck	BBHA9170	9170-399	2023/5/12	2 Year
Pre-Amplifier	Lunar EM	LNA18G26-40	J1012131010001	2023/5/10	2 Year
Pre-Amplifier	Lunar EM	LNA26G40-40	J1013131028001	2023/5/10	1 Year
Loop Antenna	Schwarzbeck	FMZB1519	1519-012	2023/5/12	1 Year
Band reject Filter(50dB)	WI/DE	WRCGV-2400(2400-2485MHz)	2	2023/5/10	1 Year

For other test items:

Equipment	Manufacturer	Model No.	Serial No.	Last Cal.	Cal. Interval
Signal Analyzer	Agilent	N9010A	MY53470879	2022/5/14	1Year
Vector Signal Generater	Agilent	N5182B	MY53050878	2022/5/14	1Year
Analog Signal Generator	Agilent	N5171B	MY53050553	2022/5/14	1Year
Power Meter	Agilent	PS-X10-100	\	2022/5/15	1Year
Switchgroup	THEDA	ETF-025(VASC6)	TW5451008	N/A	N/A
MIMO Matrix Switch	THEDA	4P5TM18	TW5451009	N/A	N/A
Temperature&Humidity Chamber	ESPEC	EL-02KA	12107166	2022/7/3	1 Year

Equipment	Manufacturer	Model No.	Serial No.	Last Cal.	Cal. Interval
Signal Analyzer	Agilent	N9010A	MY53470879	2023/5/10	1Year
Vector Signal Generater	Agilent	N5182B	MY53050878	2023/5/10	1Year
Analog Signal Generator	Agilent	N5171B	MY53050553	2023/5/10	1Year
Power Meter	Agilent	PS-X10-100	\	2023/5/13	1Year
Switchgroup	THEDA	ETF-025(VASC6)	TW5451008	N/A	N/A
MIMO Matrix Switch	THEDA	4P5TM18	TW5451009	N/A	N/A
Temperature&Humidity Chamber	ESPEC	EL-02KA	12107166	2023/5/10	1Year

4.3 DESCRIPTION OF TEST MODES

The EUT has been tested under its typical operating condition.
The EUT configuration for testing is installed on RF field strength measurement to meet the Commissions requirement and operating in a manner which intends to maximize its emission characteristics in a continuous normal application.
The Transmitter was operated in the normal operating mode. The TX frequency was fixed which was for the purpose of the measurements.
Test of channel included the lowest and middle and highest frequency to perform the test, then record on this report.
Those data rates (802.11a: 54 Mbps; 802.11n(HT20): MCS0; 802.11ac(VHT20): MCS0; 802.11n(HT40): MCS0; 802.11ac(VHT40): MCS0; 802.11ac(VHT80): MCS0;) were used for all test.

Pre-defined engineering program for regulatory testing used to control the EUT for staying in continuous transmitting and receiving mode is programmed.

Wifi 5G with U-NII - 1

Frequency and Channel list for 802.11a, 802.11n (HT20), 802.11ac (VHT20):

Channel	Frequency (MHz)	Channel	Frequency (MHz)	Channel	Frequency (MHz)
36	5180	44	5220		
40	5200	48	5240		

Frequency and Channel list for 802.11n (HT40), 802.11ac (VHT40):

Channel	Frequency (MHz)	Channel	Frequency (MHz)	Channel	Frequency (MHz)
38	5190	46	5230		

Frequency and Channel list for 802.11ac (VHT80):

Channel	Frequency (MHz)	Channel	Frequency (MHz)	Channel	Frequency (MHz)
42	5210				

Test Frequency and Channel for 802.11a, 802.11n (HT20), 802.11ac (VHT20):

Lowest Frequency		Middle Frequency		Highest Frequency	
Channel	Frequency (MHz)	Channel	Frequency (MHz)	Channel	Frequency (MHz)
36	5180	40	5200	48	5240

Test Frequency and channel for 802.11n (HT40), 802.11ac (VHT40):

Lowest Frequency		Middle Frequency		Highest Frequency	
Channel	Frequency (MHz)	Channel	Frequency (MHz)	Channel	Frequency (MHz)
38	5190	N/A	N/A	46	5230

Test Frequency and channel for 802.11ac (VHT80) :

Lowest Frequency		Middle Frequency		Highest Frequency	
Channel	Frequency (MHz)	Channel	Frequency (MHz)	Channel	Frequency (MHz)
42	5210	N/A	N/A	N/A	N/A

Wifi 5G with U-NII -2A

Frequency and Channel list 802.11a, 802.11n (HT20), 802.11ac (VHT20):

Channel	Frequency (MHz)	Channel	Frequency (MHz)	Channel	Frequency (MHz)
52	5260	60	5300		
56	5280	64	5320		

Frequency and Channel list for 802.11n (HT40), 802.11ac (VHT40):

Channel	Frequency (MHz)	Channel	Frequency (MHz)	Channel	Frequency (MHz)
54	5270				
62	5310				

Frequency and Channel list for 802.11ac (VHT80):

Channel	Frequency (MHz)	Channel	Frequency (MHz)	Channel	Frequency (MHz)
58	5290				

Test Frequency and Channel for 802.11a, 802.11n (HT20), 802.11ac (VHT20):

Lowest Frequency		Middle Frequency		Highest Frequency	
Channel	Frequency (MHz)	Channel	Frequency (MHz)	Channel	Frequency (MHz)
52	5260	56	5280	64	5320

Test Frequency and channel for 802.11n (HT40), 802.11ac (VHT40):

Lowest Frequency		Middle Frequency		Highest Frequency	
Channel	Frequency (MHz)	Channel	Frequency (MHz)	Channel	Frequency (MHz)
54	5270	N/A	N/A	62	5310

Test Frequency and channel for 802.11ac (VHT80):

Lowest Frequency		Middle Frequency		Highest Frequency	
Channel	Frequency (MHz)	Channel	Frequency (MHz)	Channel	Frequency (MHz)
58	5290				

Wifi 5G with U-NII -2C

Frequency and Channel list for 802.11a, 802.11n (HT20), 802.11ac (VHT20):

Channel	Frequency (MHz)	Channel	Frequency (MHz)	Channel	Frequency (MHz)
100	5500	116	5580	132	5660
104	5520	120	5600	136	5680
108	5540	124	5620	140	5700
112	5560	128	5640		

Frequency and Channel list for 802.11n (HT40), 802.11ac (VHT40):

Channel	Frequency (MHz)	Channel	Frequency (MHz)	Channel	Frequency (MHz)
102	5510	118	5590	134	5670
110	5550	126	5630		

Frequency and Channel list for 802.11ac (VHT80):

Channel	Frequency (MHz)	Channel	Frequency (MHz)	Channel	Frequency (MHz)
106	5530	122	5610		

Test Frequency and Channel for 802.11a, 802.11n (HT20), 802.11ac (VHT20):

Lowest Frequency		Middle Frequency		Highest Frequency	
Channel	Frequency (MHz)	Channel	Frequency (MHz)	Channel	Frequency (MHz)
100	5500	120	5600	140	5700

Test Frequency and channel for802.11n (HT40), 802.11ac (VHT40):

Lowest Frequency		Middle Frequency		Highest Frequency	
Channel	Frequency (MHz)	Channel	Frequency (MHz)	Channel	Frequency (MHz)
102	5510			134	5670

Test Frequency and channel for 802.11ac (VHT80):

Lowest Frequency		Middle Frequency		Highest Frequency	
Channel	Frequency (MHz)	Channel	Frequency (MHz)	Channel	Frequency (MHz)
106	5530				

Wifi 5G with U-NII -3

Frequency and Channel list for 802.11a, 802.11n (HT20), 802.11ac (VHT20):

Channel	Frequency (MHz)	Channel	Frequency (MHz)	Channel	Frequency (MHz)
149	5745	157	5785	165	5825
153	5765	161	5805		

Frequency and Channel list for 802.11n (HT40), 802.11ac (VHT40):

Channel	Frequency (MHz)	Channel	Frequency (MHz)	Channel	Frequency (MHz)
151	5755	159	5795		

Frequency and Channel list for 802.11ac (VHT80):

Channel	Frequency (MHz)	Channel	Frequency (MHz)	Channel	Frequency (MHz)
155	5775				

Test Frequency and Channel for 802.11a, 802.11n (HT20), 802.11ac (VHT20):

Lowest Frequency		Middle Frequency		Highest Frequency	
Channel	Frequency (MHz)	Channel	Frequency (MHz)	Channel	Frequency (MHz)
149	5745	157	5785	165	5825

Test Frequency and channel for 802.11n (HT40), 802.11ac (VHT40):

Lowest Frequency		Middle Frequency		Highest Frequency	
Channel	Frequency (MHz)	Channel	Frequency (MHz)	Channel	Frequency (MHz)
151	5755	N/A	N/A	159	5795

Test Frequency and channel for 802.11ac (VHT80):

Lowest Frequency		Middle Frequency		Highest Frequency	
Channel	Frequency (MHz)	Channel	Frequency (MHz)	Channel	Frequency (MHz)
155	5775				

5 FACILITIES AND ACCREDITATIONS

5.1 FACILITIES

All measurement facilities used to collect the measurement data are located at:

EMTEK (Shenzhen) Co., Ltd.
Building 69, Majialong Industry Zone District, Nanshan District, Shenzhen, China
The sites are constructed in conformance with the requirements of ANSI C63.7, ANSI C63.4 and CISPR Publication 22.

5.2 EQUIPMENT

Radiated emissions are measured with one or more of the following types of linearly polarized antennas: tuned dipole, biconical, log periodic, bi-log, and/or ridged waveguide, horn. Spectrum analyzers with preselectors and quasi-peak detectors are used to perform radiated measurements.

Conducted emissions are measured with Line Impedance Stabilization Networks and EMI Test Receivers.

Calibrated wideband preamplifiers, coaxial cables, and coaxial attenuators are also used for making measurements.

All receiving equipment conforms to CISPR Publication 16-1, “Radio Interference Measuring Apparatus and Measurement Methods.”

5.3 LABORATORY ACCREDITATIONS AND LISTINGS

Site Description		
EMC Lab.	:	**Accredited by CNAS** The Certificate Registration Number is L2291. The Laboratory has been assessed and proved to be in compliance with CNAS-CL01 (identical to ISO/IEC 17025:2017) **Accredited by FCC** Designation Number: CN1204 Test Firm Registration Number: 882943 **Accredited by A2LA** The Certificate Number is 4321.01. Accredited by Industry Canada The Conformity Assessment Body Identifier is CN0008
Name of Firm	:	EMTEK (SHENZHEN) CO., LTD.
Site Location	:	Building 69, Majialong Industry Zone, Nanshan District, Shenzhen, Guangdong, China

6 TEST SYSTEM UNCERTAINTY

The following measurement uncertainty levels have been estimated for tests performed on the apparatus:

Test Parameter	Measurement Uncertainty
Radio Frequency	±1x10^-5
Maximum Peak Output Power Test	±1.0dB
Conducted Emissions Test	±2.0dB
Radiated Emission Test	±2.0dB
Power Density	±2.0dB
Occupied Bandwidth Test	±1.0dB
Band Edge Test	±3dB
All emission, radiated	±3dB
Antenna Port Emission	±3dB
Temperature	±0.5℃
Humidity	±3%

Measurement Uncertainty for a level of Confidence of 95%

7 SETUP OF EQUIPMENT UNDER TEST

7.1 RADIO FREQUENCY TEST SETUP

The WLAN component's antenna ports(s) of the EUT are connected to the measurement instrument per an appropriate attenuator. The EUT is controlled by PC/software to emit the specified signals for the purpose of measurements.

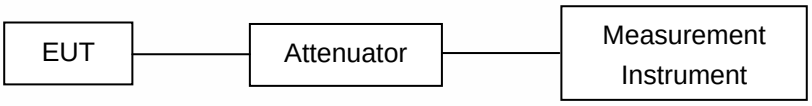

7.2 RADIO FREQUENCY TEST SETUP

The test site semi-anechoic chamber has met the requirement of NSA tolerance 4 dB according to the standards: ANSI C63.10. The test distance is 3m.The setup is according to the requirements in Section 13.1.4.1 of ANSI C63.10-2013and CAN/CSA-CEI/IEC CISPR 22.

Below 30MHz：
The EUT is placed on a turntable 0.8 meters above the ground in the chamber, 3 meter away from the antenna (loop antenna). The Antenna should be positioned with its plane vertical at the specified distance from the EUT and rotated about its vertical axis for maximum response at each azimuth about the EUT. The center of the loop shall be 1 m above the ground. For certain applications, the loop antenna plane may also need to be positioned horizontally at the specified distance from the EUT.

Above 30MHz：
The EUT is placed on a turntable 0.8 meters above the ground in the chamber, 3 meter away from the antenna. The maximal emission value is acquired by adjusting the antenna height, polarisation and turntable azimuth. Normally, the height range of antenna is 1 m to 4 m, the azimuth range of turntable is 0° to 360°, and the receive antenna has two polarizations Vertical (V) and Horizontal (H).

Above 1GHz：
(Note: the FCC's permission to use 1.5m as an alternative per TCBC Conf call of Dec. 2, 2014.)
The EUT is placed on a turntable 1.5 meters above the ground in the chamber, 3 meter away from the antenna. The maximal emission value is acquired by adjusting the antenna height, polarisation and turntable azimuth. Normally, the height range of antenna is 1 m to 4 m, the azimuth range of turntable is 0° to 360°, and the receive antenna has two polarizations Vertical (V) and Horizontal (H).

(a) Radiated Emission Test Set-Up, Frequency Below 30MHz

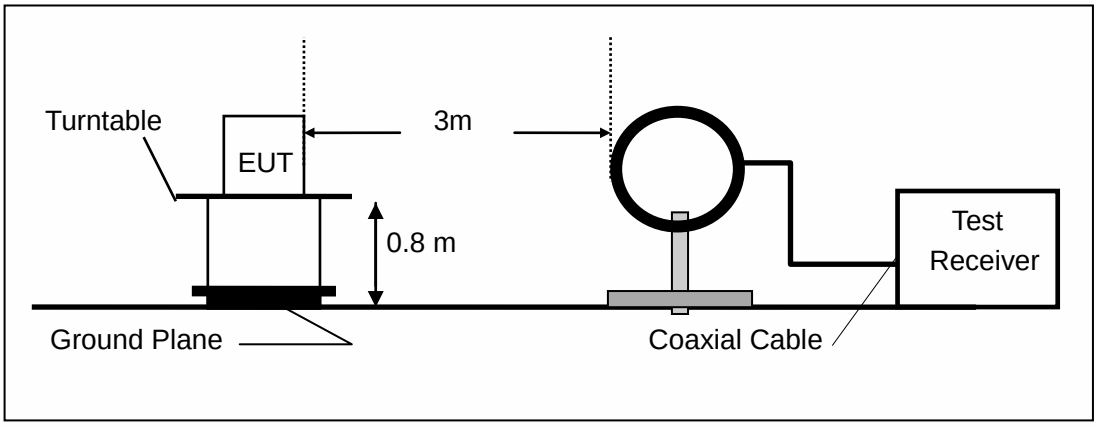

(b)Radiated Emission Test Set-Up, Frequency Below 1000MHz

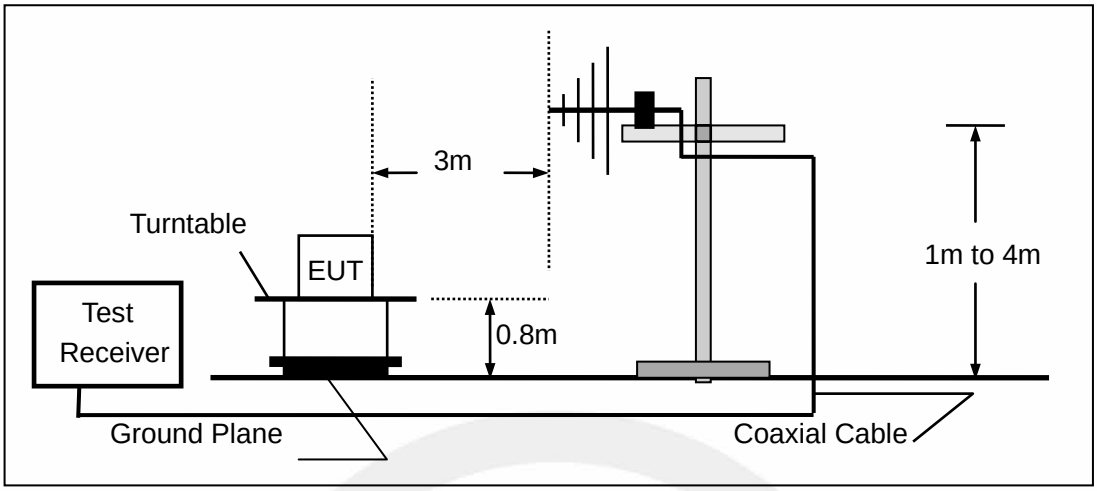

(c) Radiated Emission Test Set-Up, Frequency above 1000MHz

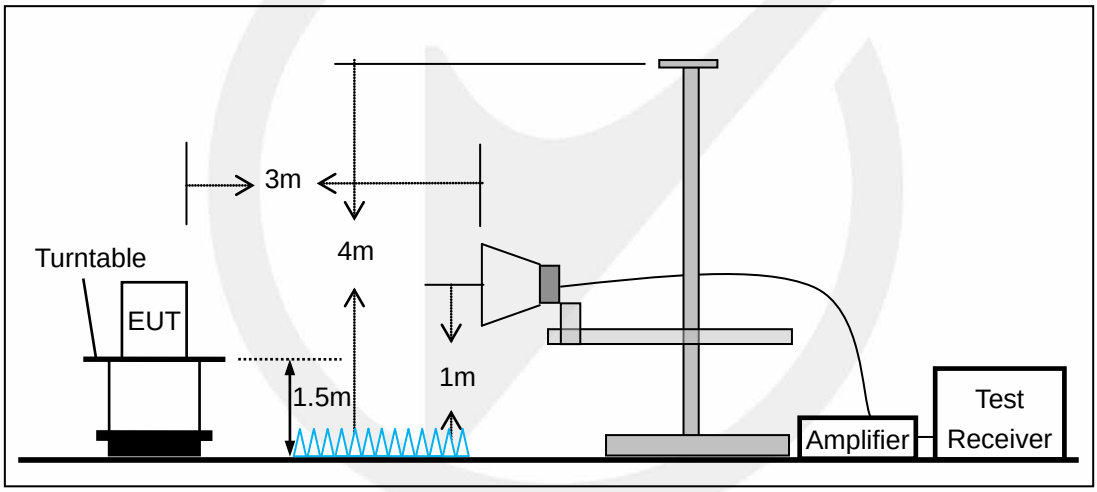

7.3 CONDUCTED EMISSION TEST SETUP

The mains cable of the EUT (maybe per AC/DC Adapter) must be connected to LISN. The LISN shall be placed 0.8 m from the boundary of EUT and bonded to a ground reference plane for LISN mounted on top of the ground reference plane. This distance is between the closest points of the LISN and the EUT. All other units of the EUT and associated equipment shall be at least 0.8m from the LISN.

Ground connections, where required for safety purposes, shall be connected to the reference ground point of the LISN and, where not otherwise provided or specified by the manufacturer, shall be of same length as the mains cable and run parallel to the mains connection at a separation distance of not more than 0.1 m.

According to the requirements in Section 13.1.4.1 of ANSI C63.10-2013 Conducted emissions from the EUT measured in the frequency range between 0.15 MHz and 30 MHz using CISPR Quasi-Peak and average detector mode.

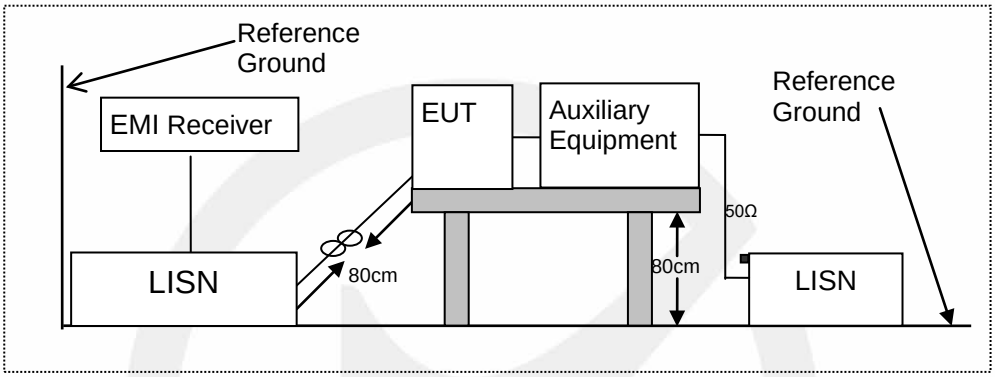

7.4 BLOCK DIAGRAM CONFIGURATION OF TEST SYSTEM

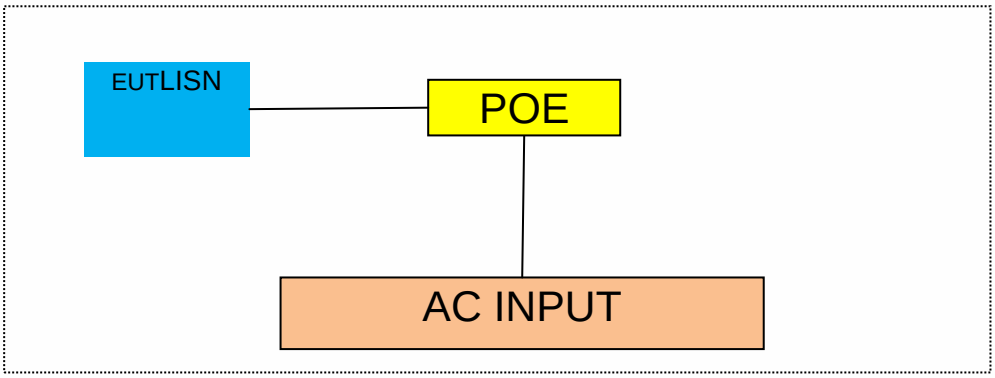

7.5 SUPPORT EQUIPMENT

EUT Cable List and Details			
Cable Description	Length (m)	Shielded/Unshielded	With / Without Ferrite
/	/	/	/

Auxiliary Cable List and Details			
Cable Description	Length (m)	Shielded/Unshielded	With / Without Ferrite
/	/	/	/

Auxiliary Equipment List and Details			
Description	Manufacturer	Model	Serial Number
Notebook	Lenovo	ThinkPad S2 Yoga 3rd Gen	R9-OR98VZ

Notes:

1. All the equipment/cables were placed in the worst-case configuration to maximize the emission during the test.

2. Grounding was established in accordance with the manufacturer's requirements and conditions for the intended use.

8 TEST REQUIREMENTS

8.1 BANDWIDTHMEASUREMENT

8.1.1 Applicable Standard

According to FCC Part 15.407(a)(1) for UNIIBand I
According to FCC Part 15.407(a)(2) for UNIIBand II-A and UNIIBand II-C
According to FCC Part 15.407(a)(3) for UNIIBand III
According toFCC Part 15.407(e) for UNIIBand III
According to 789033 D02 SectionII(C)
According to 789033 D02 SectionII(D)
According to RSS-Gen6.6, RSS 247, 6.2

8.1.2 Conformance Limit

The 26dB bandwidth is used to determine the conducted power limits.
Within the 5.725-5.85 GHz band, the minimum 6 dB bandwidth of U-NII devices shall be at least 500 kHz.

8.1.3 Test Configuration

Test according to clause 7.1 radio frequency test setup

8.1.4 Test Procedure

According to 789033 D02 v02r01 section C&D, the following is the measurement procedure.

1. Emission Bandwidth (EBW)
a) Set RBW = approximately 1% of the emission bandwidth.
b) Set the VBW > RBW.
c) Detector = Peak.
d) Trace mode = max hold.
e) Measure the maximum width of the emission that is 26 dB down from the maximum of the emission. Compare this with the RBW setting of the analyzer. Readjust RBW and repeat measurement as needed until the RBW/EBW ratio is approximately 1%.

2. Minimum Emission Bandwidth for the band 5.725-5.85 GHz
Section 15.407(e) specifies the minimum 6 dB emission bandwidth of at least 500 KHz for the band 5.715-5.85 GHz. The following procedure shall be used for measuring this bandwidth:
a) Set RBW = 100 kHz.
b) Set the video bandwidth (VBW) ⩾ 3 × RBW.
c) Detector = Peak.
d) Trace mode = max hold.
e) Sweep = auto couple.
f) Allow the trace to stabilize.
g) Measure the maximum width of the emission that is constrained by the frequencies associated with the two outermost amplitude points (upper and lower frequencies) that are attenuated by 6 dB relative to the maximum level measured in the fundamental emission.
Note: The automatic bandwidth measurement capability of a spectrum analyzer or EMI receiver may be employed if it implements the functionality described above.

D. 99 Percent Occupied Bandwidth
The 99-percent occupied bandwidth is the frequency bandwidth such that, below its lower and above its upper frequency limits, the mean powers are each equal to 0.5 % of the total mean power of the given emission. Measurement of the 99-percent occupied bandwidth is required only as a condition for using the optional band-edge measurement techniques described in section II.G.3.d). Measurements of 99-percent occupied bandwidth may also optionally be used in lieu of the EBW to 789033 D02 v01r02 General UNII Test Procedures New Rules v01 define the minimum frequency range over which the spectrum is integrated when measuring maximum conducted output power as described in section II.E.

However, the EBW must be measured to determine bandwidth dependent limits on maximum conducted output power in accordance with 15.407(a).

The following procedure shall be used for measuring (99 %) power bandwidth:
1. Set center frequency to the nominal EUT channel center frequency.
2. Set span = 1.5 times to 5.0 times the OBW.
3. Set RBW = 1 % to 5 % of the OBW
4. Set VBW ≥ 3 • RBW
5. Video averaging is not permitted. Where practical, a sample detection and single sweep mode shall be used. Otherwise, peak detection and max hold mode (until the trace stabilizes) shall be used.
6. Use the 99 % power bandwidth function of the instrument (if available).
7. If the instrument does not have a 99 % power bandwidth function, the trace data points are recovered and directly summed in power units. The recovered amplitude data points, beginning at the lowest frequency, are placed in a running sum until 0.5 % of the total is reached; that frequency is recorded as the lower frequency. The process is repeated until 99.5 % of the total is reached; that frequency is recorded as the upper frequency. The 99% occupied bandwidth is the difference between these two frequencies.

8.1.5 Test Results

Temperature:	25˚C
Relative Humidity:	45%
ATM Pressure:	1011 mbar

Note: N/A

TestMode	Antenna	Frequency[MHz]	26db EBW [MHz]	FL[MHz]	FH[MHz]	Limit[MHz]	Verdict
11A	Ant1	5180	21.320	5169.360	5190.680	---	---
		5200	21.200	5189.400	5210.600	---	---
		5240	21.560	5229.240	5250.800	---	---
		5260	21.360	5249.400	5270.760	---	---
		5280	21.480	5269.240	5290.720	---	---
		5320	20.600	5309.680	5330.280	---	---
		5500	21.000	5489.440	5510.440	---	---
		5580	20.920	5569.640	5590.560	---	---
		5700	21.120	5689.480	5710.600	---	---
		5745	21.080	5734.400	5755.480	---	---
		5785	21.320	5774.320	5795.640	---	---
		5825	21.320	5814.280	5835.600	---	---
11N20SISO	Ant1	5180	21.120	5169.520	5190.640	---	---
		5200	21.280	5189.400	5210.680	---	---
		5240	21.320	5229.360	5250.680	---	---
		5260	21.080	5249.520	5270.600	---	---
		5280	21.440	5269.280	5290.720	---	---
		5320	21.680	5309.080	5330.760	---	---
		5500	21.200	5489.320	5510.520	---	---
		5580	21.600	5569.120	5590.720	---	---
		5700	21.200	5689.400	5710.600	---	---
		5745	21.480	5734.320	5755.800	---	---
		5785	21.440	5774.240	5795.680	---	---
		5825	21.240	5814.480	5835.720	---	---
11N40SISO	Ant1	5190	40.160	5169.920	5210.080	---	---
		5230	39.680	5210.240	5249.920	---	---
		5270	39.840	5250.240	5290.080	---	---
		5310	39.920	5290.080	5330.000	---	---
		5510	39.600	5490.240	5529.840	---	---
		5550	39.760	5530.080	5569.840	---	---
		5670	39.680	5650.160	5689.840	---	---
		5755	39.840	5735.080	5774.920	---	---
		5795	39.760	5775.240	5815.000	---	---
11AC20SISO	Ant1	5180	21.200	5169.400	5190.600	---	---
		5200	21.440	5189.280	5210.720	---	---
		5240	21.120	5229.480	5250.600	---	---
		5260	21.240	5249.360	5270.600	---	---
		5280	21.400	5269.400	5290.800	---	---
		5320	21.200	5309.400	5330.600	---	---
		5500	21.240	5489.360	5510.600	---	---
		5580	21.120	5569.480	5590.600	---	---
		5700	21.080	5689.400	5710.480	---	---
		5745	21.240	5734.280	5755.520	---	---
		5785	21.560	5774.120	5795.680	---	---

		5825	21.120	5814.440	5835.560	---	---
11AC40SISO	Ant1	5190	39.520	5170.320	5209.840	---	---
		5230	40.000	5210.080	5250.080	---	---
		5270	40.000	5250.080	5290.080	---	---
		5310	39.600	5290.160	5329.760	---	---
		5510	39.760	5490.160	5529.920	---	---
		5550	39.440	5530.320	5569.760	---	---
		5670	39.760	5650.000	5689.760	---	---
		5755	40.000	5735.080	5775.080	---	---
		5795	39.600	5775.240	5814.840	---	---
11AC80SISO	Ant1	5210	80.960	5169.680	5250.640	---	---
		5290	81.600	5249.360	5330.960	---	---
		5530	81.280	5489.200	5570.480	---	---
		5610	80.800	5569.520	5650.320	---	---
		5775	80.800	5734.360	5815.160	---	---

11A_Ant1_5180

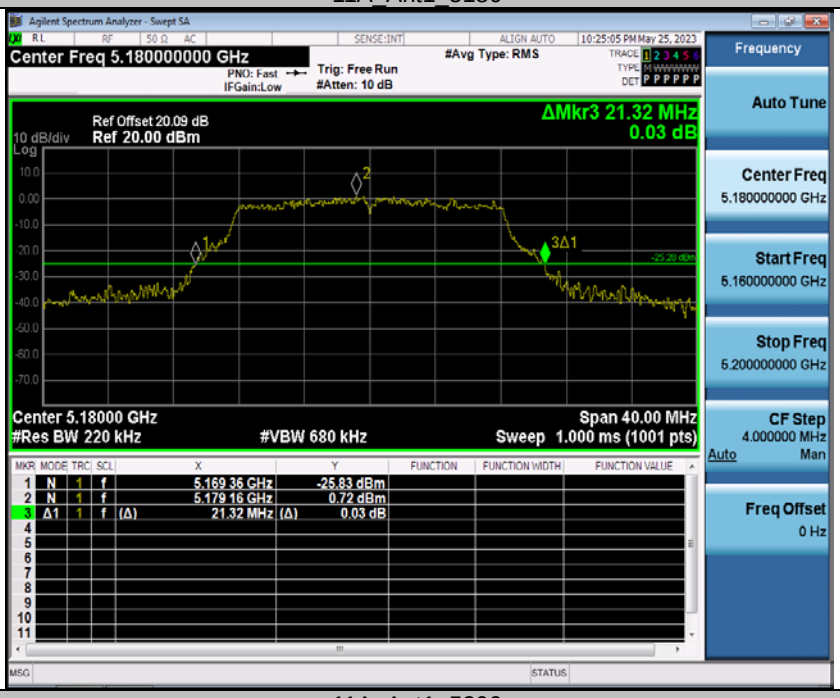

11A_Ant1_5200

11A_Ant1_5240

11A_Ant1_5260

11A_Ant1_5280

11A_Ant1_5320

11A_Ant1_5500

11A_Ant1_5580

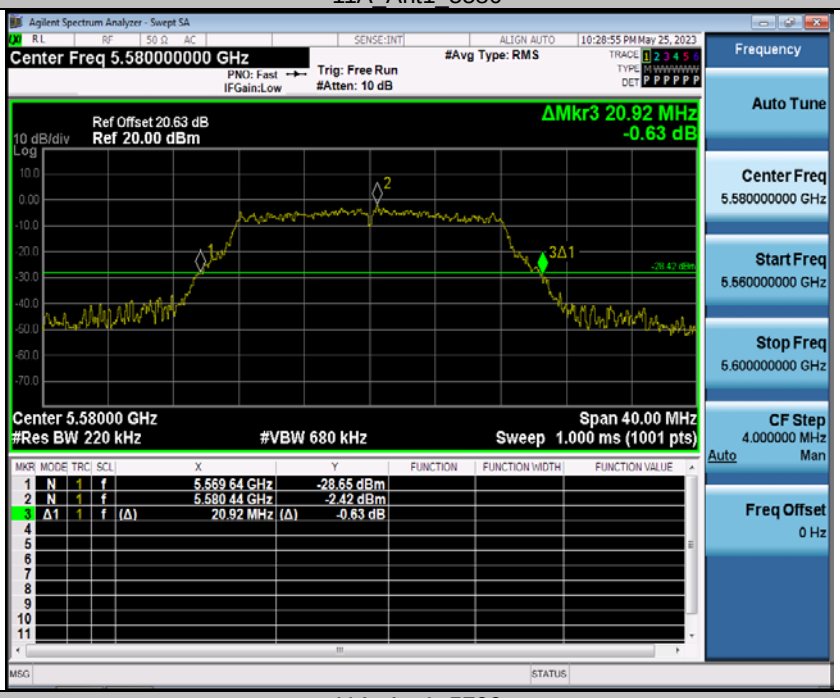

11A_Ant1_5700

11A_Ant1_5745

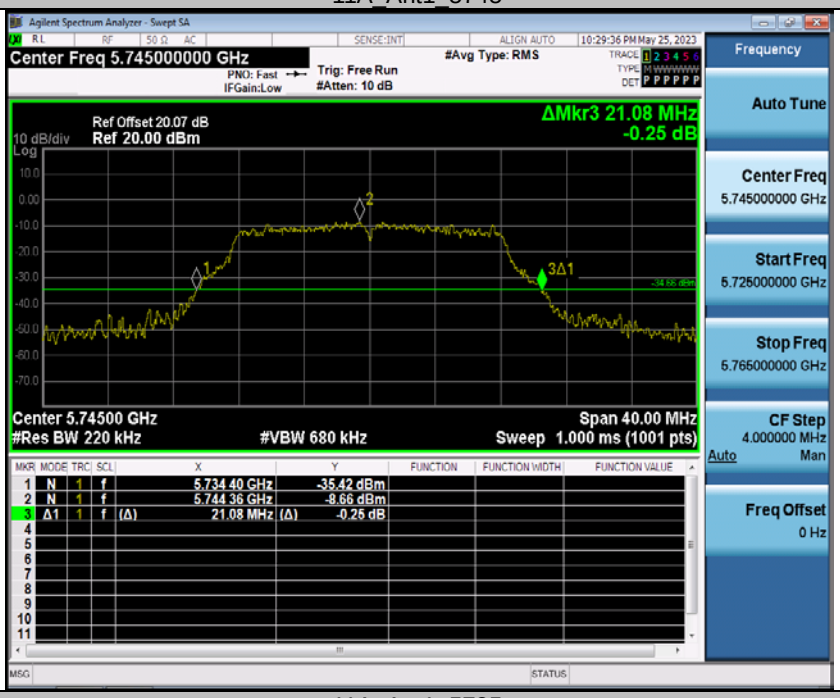

11A_Ant1_5785

11A_Ant1_5825

11N20SISO_Ant1_5180

11N20SISO_Ant1_5200

11N20SISO_Ant1_5240

11N20SISO_Ant1_5260

11N20SISO_Ant1_5280

11N20SISO_Ant1_5320

11N20SISO_Ant1_5500

11N20SISO_Ant1_5580

11N20SISO_Ant1_5700

11N20SISO_Ant1_5745

11N20SISO_Ant1_5785

11N20SISO_Ant1_5825

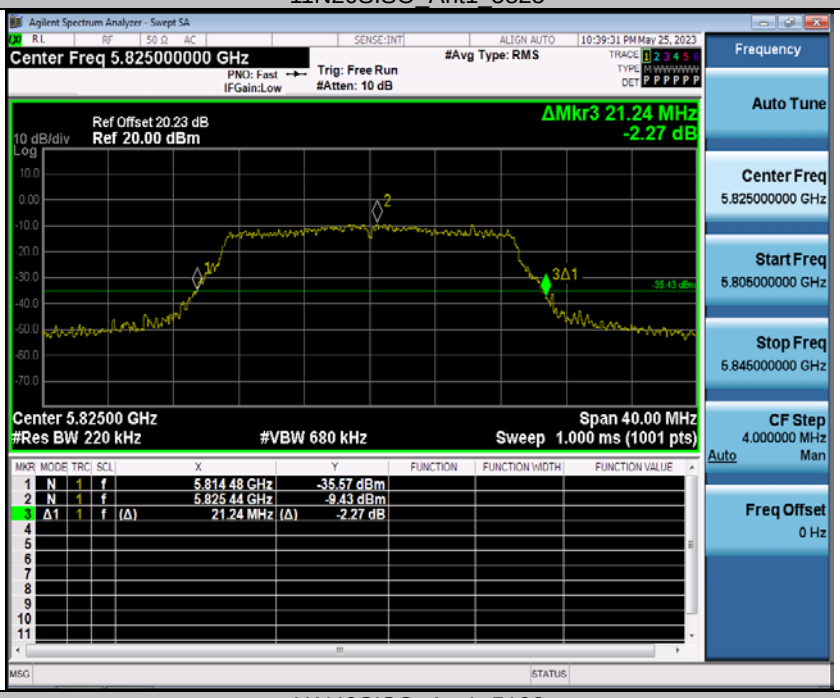

11N40SISO_Ant1_5190

11N40SISO_Ant1_5230

11N40SISO_Ant1_5270

11N40SISO_Ant1_5310

11N40SISO_Ant1_5510

11N40SISO_Ant1_5550

11N40SISO_Ant1_5670