# ARENDAL®

# 1723

SUBWOOFER

HANDBOOK

# WELCOME

*Thank you for purchasing an Arendal Sound product. We hope you enjoy it as much as we enjoyed creating it"*

- Team Arendal Sound


**STORY OF ARENDAL**
**1723 SUBWOOFERS**
**PREMIUM BUILD QUALITY**
**AVALANCHE 800 / 1200 IQ AMPLIFIER**
**13.8" WOOFER**
**PLACEMENT & SETUP**
**HOW TO CONNECT**
**AMPLIFIER OPERATIONS**
**SAFETY INSTRUCTIONS**
**WARRANTY**

# ARENDAL® 1723 SUBWOOFER

*After a two-year development period we proudly present the new subwoofers in the 1723 Series. Improving what were already market leading products was not an easy task to tackle. Our statement series offers an exceptional balance between perfect music reproduction as well as sheer bass depth and output.*

*We have nailed it. It's a promise.*

*Amazing performance. Dynamic, clean, earth-shattering bass packed in a super-rigid HDF cabinet with premium build quality and details unheard of in this price range. No cheap vinyl or simple solutions. Hi-End performance and build quality.*

*All new 1723 Series Subwoofers are utilising our completely redesigned, groundbreaking 13.8" driver with 50% more excursion and performance, with insane dynamics. Yes, we've also succeeded in improving the dynamics. The statement and definition of skilled engineering and design efficiency. We consider it a masterpiece.*

*A premium driver needs premium amplification. Actually, our new Avalanche 800 IQ & 1200 IQ amplifiers are the market statement of high-power amplifiers with a new mindset of features and usability. The Smart technology for subwoofers. Conservatively rated at 800W and 1200W RMS.*

*The flexibility in its ways of connectivity and setup will makes every subwoofer amplifier look outdated. The large Hi-Res colour display makes all your adjustments a breeze and provides an excellent overview of all the steps to optimise your Hi-End subwoofer for your system.*

*1723 Series Subwoofers. Made by enthusiasts for enthusiasts. Pro features for the Pro user.*

# STORY OF ARENDAL

I was born and raised in Arendal 1978, Norway. As a kid I enjoyed many activities, such as catching fish for my cat Johnas, riding my bike, playing football and video games, and hanging out with friends. Of course not a day went by without wrestling with my older brother Dan Benny.

My dad, Jan, founded an electronic store in the 70´s and it quickly became the top selling store of it's kind throughout Norway. On a good Saturday it was not unusual to sell 40-50 color TV's, which were hot tech at the time. Today he spends his elder days as a fisherman, just like my grandfather Olav before him.

During my younger days there was rarely a weekend when I was not (somewhat reluctantly!) dragged out of bed on a Saturday morning to help sell my grandfather's catch from the night before to the neighbourhood. I was often told "your grandfather has caught a lot of fish, you need to help him sell it". Dragging all the fish with me, I walked several kilometers and knocked on many doors utilizing some maybe desperate sales tactics to charm the older ladies. My customers may have felt sorry for me seeing me walk around with fish, but I was able to sell them and returned home with pockets full of money. My grandfather gave me a cut of the sales so I could buy candy and save the rest in order to purchase more audio products. These were some of the best memories of my childhood.

As you may have guessed, I was introduced to the audio world at a very early age. When I turned 14 I started to work part time at my dad's store. When your hobby is electronics and you work in such an environment you get the urge to purchase and test as many products as you can, which I did with great joy. Normally, instead of a paycheck, I brought home new speakers or amplifiers that had to be tested. My very first setup was a stereo system with some huge speakers which could play very loud. It was hugely annoying to my mother. Does that sound familiar?

It's one thing to have fun with audio equipment, but another very different thing to understand it. I studied electronics for 8 years, graduated from Grimstad with an engineering degree and was lucky enough to get a job in the oil industry. After working in the oil industry for a while, I knew that it wasn't the field for me. Audio was my passion and that's what I wanted to work with.

With 15 years of business experience in the audio industry and after shipping tens of thousands of audio products throughout Europe and beyond, I wanted something else. Something of our own which had been lingering in the air for many years. At our 10th anniversary, what better way to celebrate and continue the story, than with the release of our own speaker brand?

The idea of Arendal Sound was born.

It was no coincidence. We've spent years researching, listening to our customers, planning, developing, engineering and investing in Arendal Sound. I always wanted our team to have something to be extraordinarily proud of and enthusiastic about. It had to be something that was based on solid acoustic engineering principles

and yet aesthetically beautiful, surrounded by a unique story - ours. Arendal Sound builds upon traditional and historic Norwegian elements, where solid craftsmanship and finish quality are a top priority, backed with pleasure in the use and pride in the ownership. We even want to show our beautiful country to our overseas customers and invite them to Norway.

We are a family and team with the same mentality and goal, to create market leading products, packed with incredible value, backed with our highly acclaimed customer support that extends beyond the date of purchase.

To me, business comes second and at the end of the day, it's my family who are most important. Without them it would have been hard. I would especially like to thank my wife, Heidi, as she has been by my side all this time showing extreme patience and understanding. And of course my two little kids, Marcus and Leander, they are the dessert in life as my mom and dad say.

***We hope you will enjoy our products as much as we enjoyed making them.***

**Jan Ove Lassesen**
Founder of Arendal Sound

1723
SUBWOOFER

# 1723

## SUBWOOFER 1S

BLACK GLOSS

WHITE GLOSS

BLACK SATIN

WHITE SATIN

# SPECIFICATIONS

1723 Subwoofer 1S is the single driver compact subwoofer in our new market-leading statement series. It offers an exceptional balance between perfect music reproduction as well as sheer bass depth and output, with impeccable dynamics. Utilising a single 13.8” driver and our smart Avalanche 800 IQ amplifier boosting easily 800W with undistorted power that offer ample adjustability for any setup.

| | |
|---|---|
| Woofer | 13.8" |
| Enclosure | Sealed |
| Enclosure material | High Density Fiberboard (HDF) |
| Amplifier | Avalanche 800 IQ, 800W RMS |
| Power cable | 2 meters |
| Frequency response | |
| EQ1 | 18-200Hz (+/-3dB) |
| EQ2 | 25-200Hz (+/-3dB) |
| EQ3 | 36-200Hz (+/-3dB) |
| Included | Power cable. Manual. |
| Dimensions without feet | 48.0H x 33.5W x 45.0D cm |
| Dimensions with rubber cones | 49.2H x 33.5W x 45.0D cm |
| Weight | 24.5 kg |
| Break-in for optimal performance | 50 hours |

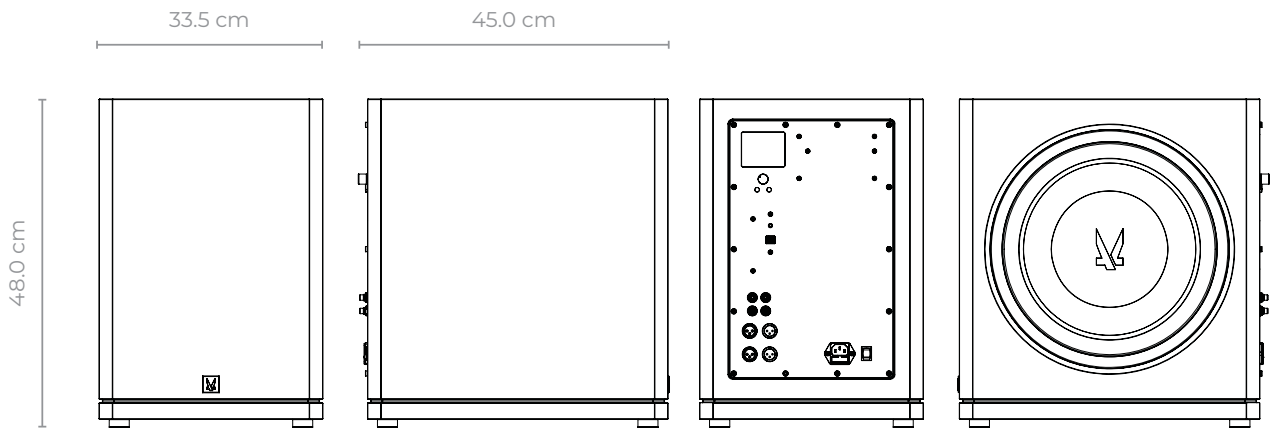


FRONT LEFT BACK RIGHT

# 1723

## SUBWOOFER 1V

BLACK GLOSS

WHITE GLOSS

BLACK SATIN

WHITE SATIN

# SPECIFICATIONS

1723 Subwoofer 1V is a vented, high performance, single driver subwoofer. Subwoofer 1V sets a new standard in its class with insane performance for bass-heavy music tracks or movies. The enclosure can be sealed, transforming this brute from a force of nature to a more nuanced and tighter sounding musical performer like 1723 Subwoofer 1S. Only bigger and more powerful. Utilising a single 13.8" driver and our smart Avalanche 800 IQ amplifier boasting 800W of undistorted power that offers ample adjustability for any setup.

| | |
|---|---|
| Woofer | 13.8" |
| Enclosure | Sealed / Vented |
| Enclosure material | High Density Fiberboard (HDF) |
| Amplifier | Avalanche 800 IQ, 800W RMS |
| Power cable | 2 meters |
| Frequency response | |
| EQ1 sealed | 18-200Hz (+/-3dB) |
| EQ2 sealed | 25-200Hz (+/-3dB) |
| EQ3 sealed | 33-200Hz (+/-3dB) |
| EQ1 vented | 17-200Hz (+/-3dB) |
| EQ2 vented | 22-200Hz (+/-3dB) |
| EQ3 vented | 30-200Hz (+/-3dB) |
| Port | 2.5H x 35.0W cm |
| Included | Power cable. Manual. Port plug. |
| Dimensions without feet | 62.5H x 45.0W x 55.0D cm |
| Dimensions with rubber cones | 63.7H x 45.0W x 55.0D cm |
| Weight | 48.1 kg |
| Break-in for optimal performance | 50 hours |

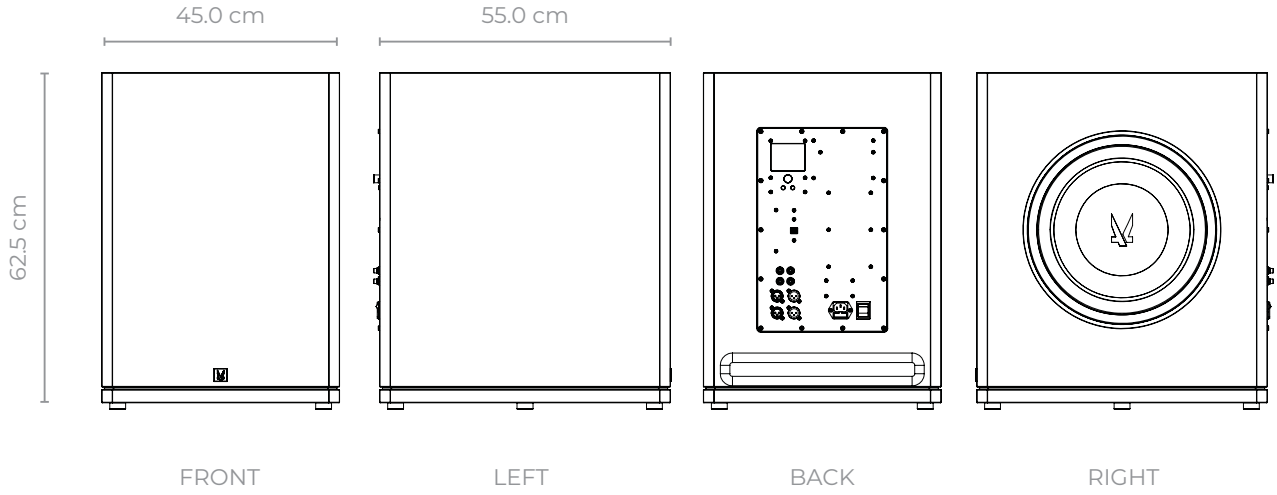

# 1723

## SUBWOOFER 2S

BLACK GLOSS

WHITE GLOSS

BLACK SATIN

WHITE SATIN

# SPECIFICATIONS

Dual drivers, twice the fun. 1723 Subwoofer 2S offers an exceptional balance between perfect music reproduction as well as sheer bass depth and output. Utilising two of our proprietary 13.8” drivers, driven by our smart 1200W RMS Avalanche 1200 IQ amplifier that offers ample adjustability for any setup. The cabinet is sealed and made of HDF, and is sized to provide an optimally damped system that produces deep, undistorted musical bass with a complete lack of smearing or coloration.

The dual opposing, force-absorbing driver layout delivers clean, deep bass, without cabinet movement subtracting anything from the driver output.

*Literally* startling dynamics. We believe this the world’s best subwoofer for music. At any price level.

| | |
|---|---|
| Woofer | 2 x 13.8" |
| Enclosure | Sealed |
| Enclosure material | High Density Fiberboard (HDF) |
| Amplifier | Avalanche 1200 IQ, 1200W RMS |
| Power cable | 2 meters |
| Frequency response | |
| EQ1 | 17-200Hz (+/-3dB) |
| EQ2 | 24-200Hz (+/-3dB) |
| EQ3 | 33-200Hz (+/-3dB) |
| Included | Power cable. Manual. |
| Dimensions without feet | 53.0H x 42.0W x 50.0D cm |
| Dimensions with rubber cones | 54.2H x 42.0W x 50.0D cm |
| Weight | 41.4 kg |
| Break-in for optimal performance | 50 hours |

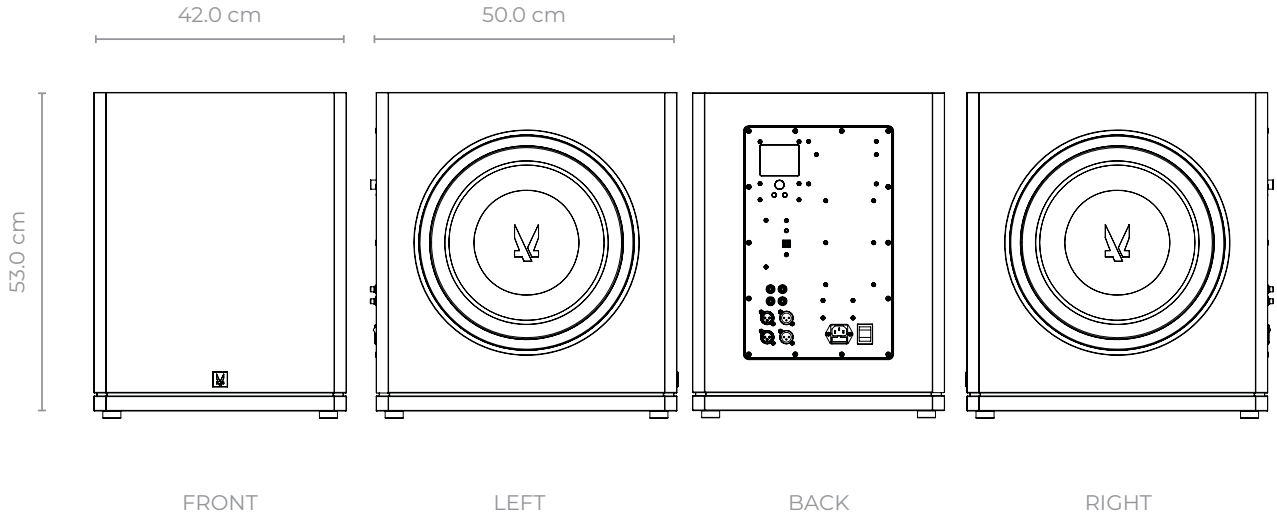

# 1723

## SUBWOOFER 2V

BLACK GLOSS

WHITE GLOSS

BLACK SATIN

WHITE SATIN

# SPECIFICATIONS

1723 Subwoofer 2V is the Hulk among subwoofers. It's big. It's ported. It may be the perfect replacement for your old coffee table. For all purposes and intents, it is a 1723 Subwoofer 2S on steroids, with absolutely massive output.

The enclosure can be sealed, which turns this brute from a force of nature into a more nuanced and tighter sounding musical performer. The dual opposing, power-absorbing driver layout delivers clean, deep bass, without cabinet movement subtracting anything from the driver output. Prepare for mayhem.

Utilising two of our proprietary 13.8" drivers, driven by our smart 1200W RMS Avalanche 1200IQ amplifier that offers ample adjustability for any setup.

Movies or music. Perfect for both.

| | |
|---|---|
| Woofer | 2 x 13.8" |
| Enclosure | Sealed / vented |
| Enclosure material | High Density Fiberboard (HDF) |
| Amplifier | Avalanche 1200 IQ, 1200W RMS |
| Power cable | 2 meters |
| Frequency response | |
| EQ1 sealed | 17-200Hz (+/-3dB) |
| EQ2 sealed | 24-200Hz (+/-3dB) |
| EQ3 sealed | 34-200Hz (+/-3dB) |
| EQ1 vented | 15-200Hz (+/-3dB) |
| EQ2 vented | 21-200Hz (+/-3dB) |
| EQ3 vented | 28-200Hz (+/-3dB) |
| Port | 4H x 40W cm |
| Included | Power cable. Manual. Port plug. |
| Dimensions without feet | 70.0H x 50.0W x 60.9D cm |
| Dimensions with rubber cones | 71.2H x 50.0W x 60.9D cm |
| Weight | 60.1 kg |
| Break-in for optimal performance | 50 hours |

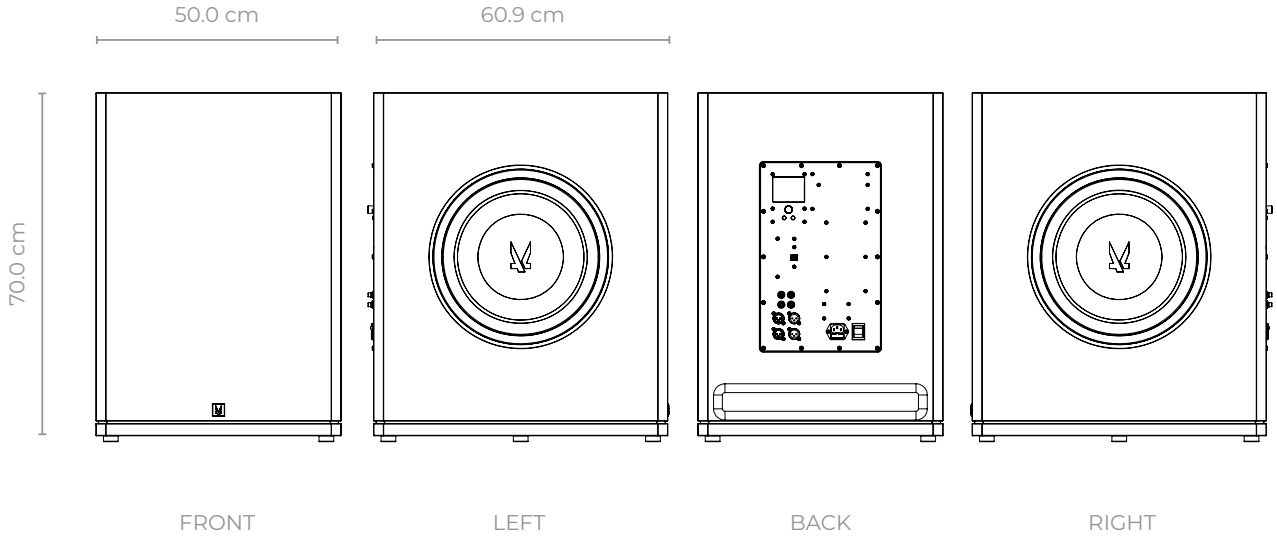

# PREMIUM BUILD QUALITY

### *Rock solid HDF cabinets*

Higher density and naturally better damped than MDF (Medium Density Fiberboard), using HDF (High Density Fiberboard) results in a sonically inert cabinet. HDF was also chosen because it can be machined much more precisely than MDF, which is especially important for precision critical areas like the two part HDF & Aluminum waveguide.

Arendal Sound products are using HDF thicknesses ranging from 18 to 50mm throughout the designs, with critical areas like driver mounting and cabinet bases being the thickest.

Internal bracing has been strategically placed to increase overall cabinet strength and limit unwanted panel vibrations that may cause audible colorations. Internal braces are CNC routed to shape to smooth internal airflow and minimize volume losses within the cabinet, whilst maintaining thickness at critical assembly joints.

### *Magnetic metal grills*

We are especially proud of our new exclusive and fully custom made grills. For all Arendal Sound speakers we have made a free flowing, perforated metal grill which does not affect sound quality. We have then wrapped it with a clean black cloth to tone down the visually hard look, whilst simultaneously damping out any residual vibrations.

In addition, we did not want plastic pins to add the grill, which will degrade the clean look of the cabinet with pin cups. Neodymium sub-surface magnets grip the metal grill with great force, preventing unwanted movement and vibration during high level playback. The grills have a rubber protection to ensure the cabinet is not damaged when you attach the grill and you will hear a nice 'thump' when you let them seat. Grilles on or off, our speakers look and sound great either way.

## *Premium Finishes*

All Arendal Sound 1723 speakers and subwoofers comes in four premium finishes;

- Black Satin
- Black Gloss
- White Satin
- White Gloss

To ensure the best and long lasting quality, all Arendal Sound speakers and Subwoofers use up to 12 layers of paint, consisting of primers and polyurethane paint, hand finished. We use no vinyl, anywhere.

The finish is what you would expect from Hi-End products.

## *No plastic - "Green sound"*

Well, you may find a cable strap somewhere in plastic, but all components in Arendal Sound which affects the sound are built up from non-plastic parts. High grade aluminium back plates on subwoofers and speakers. Even our logo is in anodized aluminium.

## *Internal wiring*

Not your average zip cord. All products utilize high count multi-strand wire, braided together. These were not done for looks, but chosen to produce the most consistent impedance possible and electrical current carrying capabilities. The benefit is very low insertion losses without the problems of "skin effect" caused by large diameter wires. This insures that each driver sees what the amplifi er intended without additional colorations.

## *The puck*

We have customized a new slick puck-design mounted with M6 bolts. They create extreme stability against the floor. Branded with the Arendal Sound logo.

# AVALANCHE 800 / 1200 IQ AMPLIFIER

### *Intelligent Powerhouse*

We introduced the 550 IQ which already has set market-leading standards. The Avalanche 800 IQ & 1200 IQ build on the 550, but have been optimised, equipped with additional features and highly refined for our hi-end 1723 subwoofers. Impeccable performance, conservatively rated at 800/1200W, with capabilities that make the difference. Subwoofers are not the same anymore.

### *Intelligent Technology*

The term "intelligent" is rarely used in the audio industry, especially for speakers and subwoofers. The new Avalanche 800 IQ & 1200 IQ subwoofer amplifiers are two more exceptions from Arendal Sound, when it comes to performance and technology. State-of-the-art amplifier, designed and developed from scratch to deliver performance and features you could not get before.

The Avalanche 800 IQ & 1200 IQ boast killer performance and offer features under their hoods that have never been seen in the industry before. Multiple sensors in the digital and analogue domain, from inputs to outputs, to preserve dynamics and clean bass. It has a powerful microcontroller (MCU) which, as the brain, controls and reads all data passing through the signal flow. This ensures that the signal is as unaffected as possible from its original source to the subwoofer output.

Research and development over two years, fully customized by Arendal Sound. The Avalanche 800 IQ & 1200 IQ are smart and intelligent beasts in the world of amplifiers.

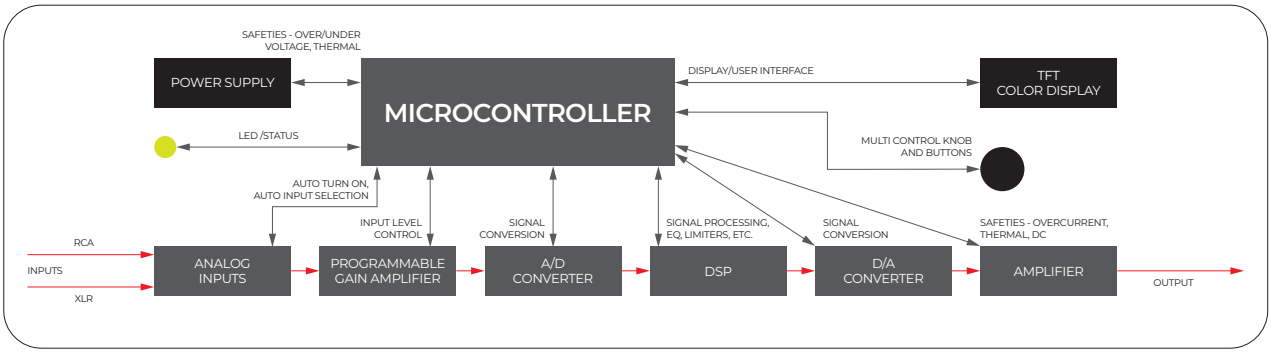


RED ARROWS INDICATE SIGNAL FLOW
GREY ARROWS INDICATE COMMUNICATION

## *Avalanche 800 IQ & 1200 IQ Features*

- High-resolution 2.6” colour LCD display
- Flip Screen Feature lets you use the screen menu upside down
- Dual source assignable RCA & XLR inputs with assignable memory presets for each input
- Selectable 12V trigger and auto-on functions for each input
- RCA & XLR passthrough outputs
- User adjustable on-time and auto-on wake-up settings
- Variable phase & signal inversion
- 3 EQ modes for sealed speakers, 3 EQ modes for vented speakers
- 7-band parametric EQ
- Low pass filter & slopes
- Subsonic filter & slopes
- Smart amplifier technology
- Full 800W RMS down to 10Hz for Avalanche 800 IQ
- Full 1200W RMS down to 10Hz for Avalanche 1200 IQ
- Advanced adjustability for perfect room response and ease of use
- Extensive multi-sensors to protect and maintain signal quality
- Safety controls
- App ready*

Thanks to the new Avalanche IQ technology subwoofer amplifiers will never be the same again.

**App Ready – The amplifier has a built-in Bluetooth module for future App upgrades.*

# 13.8” WOOFER

## *Redesigned masterpiece*

We knew we could achieve more by investing all our focus and know-how to go beyond what’s already in the market. It’s still 13.8”. Looks about the same. But, it’s a different beast. The best we have ever made. With 50% higher excursion, better performance and increased dynamics.

## *The new 13.8” world-class driver*

- 50% increase in excursion and performance
- Improved dynamics
- In layman’s terms it has better “speed”, “attack” and “punch”

## *Design features*

**Driver Redefinition**

After thorough optimisation and testing using FEA, Klippel and other methods, we refined a motor featuring multiple aluminium shorting rings with a focused field “T” pole design. The result is a linear magnetic field over a long voice coil throw, with very low inductance. The latest version of this driver has been reworked and redesigned in every conceivable way, everything has been modified to squeeze out even more output, while not only maintaining but also improving the sound quality, not insignificantly compared to the initial 1723 driver.

**Increased responsiveness**

Better magnetic field design with thicker aluminium shorting rings above and below the magnet gap, which improves control over inductance (and significantly reduces it) vs position and power – this significantly improves response and distortion over the older model.

The symmetrical suspension consists of a heavily analysed NBR surround and Connex spider with integrated tinsel leads. All combined to create a very high excursion with linear suspension. Again, contributing to high output and a low-distortion, precise bass.

**Hybrid Cone**

Our unique hybrid cone made of long fibre pulp and fiberglass, takes advantage of the pulp’s superior stiffness to weight ratio, with the additional rigidity of fiberglass to deliver a driver of massive durability that is inherently inert and self-damping. The result is a cone that achieves optimum pistonic motion at all frequencies it is required to produce and beyond, creating deep, controlled and hard-hitting bass.

## *Lack of compression = extreme dynamics*

The airflow venting below the dust cap (venting holes in the cone body) and the spider (venting holes in the frame) have been added for two very important reasons:

1. We have improved the Airflow venting compared to the previous version by adding more vents in the bobbin body to further increase the air flow under the spider for better heat dissipation and to reduce air-rush noises even further, resulting in less distortion. Air heated by the voice coil is forced away with each stroke of the cone diaphragm. This continuous exchange of air mitigates thermal compression and significantly increases the woofer's overall power handling capability while reducing distortion.
2. The airflow relieves the asymmetric compliance (suspension stiffness) and distortion due to the non-linear compression and dilution of the air typically trapped under the dust cap and spider. Typical vented pole designs are limited in their effectiveness due to the lack of airflow volume at maximum power and excursions, because where a free, smooth airflow is most needed, the pole vent alone is not sufficient.

The new Arendal Sound 1723 Subwoofers utilize an ultra-high temp polyimide former with an aluminium voice coil for low mass, high motor force and optimum thermal dissipation.

The benefit of using aluminium instead of copper in this format is that the weight is significantly reduced and heat exchange is substantially increased, while the conductivity decreases only slightly compared to copper. This means that a driver with less moving mass can handle more power without the voice coil burning up. In sum, this means a driver that can handle more power and that has better transient response.

# PLACEMENT & SETUP

Subwoofer placement can make or break system performance. As the foundation of rhythm, timing and impact upon which music or movie soundtracks are built, a poorly positioned subwoofer will deliver uneven, tuneless, slow and soggy bass. The whole system will not sound good. End of.

The performance of a subwoofer is inextricably linked to the room in which it sits It is therefore impossible to optimize the subwoofer without considering the room and it's contribution. This contribution takes two forms. The first is the structure of the waves reflected within the room and how they super-impose on top of each other to deliver excessive peaks at certain frequencies, whilst causing total cancellations at others. The second is the room's ability to absorb bass (or as you will hear it, let bass leak out) through flexible structures like stud walls.

Even though what follows may seem contrary to what many will say (or rather parrot what they have heard) there are good, solid acoustic reasons for what follows. Here is why...

### *Corner placement*

Arendal Sound therefore recommend starting with a front corner placement. Try to use the corner with the most solid structure - usually brick or block, or if in a timber framed construction; the one with the larger, thicker timbers which are usually an outside wall. Don't get too hung up on this, as your room is what it is.

But why a corner? For starters, a corner delivers the most possible boundary gain, increasing for free, the apparent bass output. You may not want all of this output, but you can always turn the subwoofer down and as a result, you will enjoy increased dynamic headroom and lower distortion. That bit is standard subwoofer lore, but that's not the whole story, because corner placement delivers two other benefits.

The first of these is that you have greatly simplified the structure of room modes (the peaks and dips the overlapping bass waves produce) and therefore the ease with which you can tune the bass to flat with EQ, for more listening positions. This may sound counter-intuitive, as corner placement is known for emphasising the axial modes - the main ones that are associated with the rooms largest dimensions. What corner placement does is greatly reduce the number of reflections within the room, because in subwoofer terms, the wall against which the subwoofer sits, is effectively removed from the equation of the first reflections.

How so? If you place a subwoofer at some point out in the room, all of the walls have a first reflection that will bounce around the room to create modes. If you place a subwoofer against a wall, the first reflection of that wall is, to all intents and purposes, removed as the few inches of clearance between the subwoofer and wall, mean they are effectively the same place. Remember, we're dealing with wavelengths of metres in length, so even 30cm is comparatively irrelevant. So, as that wall is effectively at the subwoofer, it's reflection has been removed. Put the subwoofer in the corner and you have effectively removed two walls.

You will still get the first reflection from the opposing walls, but that's half the number of first reflections and the resulting peak/dip structure in the room might be slightly increased, but it will be simpler and more likely to be similar across a wider number of seating position. This presents a far simpler proposition for the Auto EQ in your AV-Receiver or Processor.

### *But there is more*

Each first reflection, sits on an indirect path to your ears, that is longer than the direct path from the subwoofer. So, it seems obvious that each reflection having travelled further, is time delayed. That a succession of delayed signals arriving at your ear will time smear the original signal into a longer, drawn out version. This is clearly not accurate and is just another form of distortion of the original signal, robbing the signal of dynamic impact and obscuring bass texture.

This is important because, whilst we tend to visualize sound in a two dimensional world of frequency versus amplitude and love a graph showing a flat response, our brain very much processes sound using information from the third dimension of time. Indeed, our brain has a very difficult time differentiating a loud sound, from a quieter one that lasts longer.

Of course, in an ideal world, we would have a flat response and a smooth fast decay of sound, but the decay time dominates our aural perception, so these algorithms will turn a given frequency down below the flat response, in order to trick our brains into hearing it as flat. Against this background, it's easy to see why putting a subwoofer into a corner, removes reflections, simplifying the response in both the frequency and time domains in a way that modern equalisation likes to see and deal with and our ear will hear as tighter and better defined.

### *But I want more subwoofers!*

As a manufacturer of fine subwoofers, Arendal Sound will not argue with you! In our defence, the benefits of multiple subwoofers are well known, for extending headroom, lowering distortion and increasing the depth of audible response. There is no argument there. So where do you put this second subwoofer?

The optimal position for a second subwoofer, is co-located on top of the first one. This is true, even if you can't put the first one in a corner. The second best position is co-located next to the first one. There is a school of thought that mirror image position of the first one is best, especially now some AV-Receivers and processors have independently equalisable subwoofer channels and the new, object based surround formats, can carry two channels of sub-bass equalisation. However, we would suggest that one (or effectively one in the case of two co-located) better subwoofer will give superior bass.

In much the same way our Subwoofer 2's take advantage of using the mutual acoustic coupling of two drivers to deliver significant performance gains in place of one, larger driver, without the drawbacks, two co-located subwoofers confers the same advantages - Namely, you get the full monty of a 6dB gain in output, or 6dB

reduction in distortion for a given volume setting. Spread the subwoofers further apart, and that advantage halves to closer to 3dB. 3dB is still a useful output, but separation makes a number of factors more difficult to deal with.

For one, rooms are rarely acoustically symmetrical. Even if all of the walls are the same size and structure, it's unlikely that every piece of furniture in the room is a mirror image and it all counts - Each subwoofer will have a different in-room response and require a different EQ solution. Also, whilst each subwoofer will be EQable, different listening positions will have a different path length to each subwoofer. You will just have made it harder for your AVR or Processor to achieve an EQ solution as now, not only is it fighting the room and it's dimensions, but also the changing dimension of listener to subwoofer distance to not just one subwoofer, but two.

It is arguable that in the case of stereo programme, stereo bass from two equally distributed subwoofers should be superior. However, the ear/brain makes virtually no use of the sub 80Hz subwoofer bass wavelengths to form a believable stereo image and very few recordings actually mix the bass into different channels - It is nearly always summed into an equal mono signal. In acoustic recordings where a double bass may have been recorded in real space (as an example) it's still the frequencies above the normal 80Hz crossover that carry all of the directional information. Thus, one source of better bass that serves all channels, is the better overall solution, for more listening positions.

### *But you mentioned stacking the two subs?*

This comes back to the room and integrating the subwoofers within it. In all practical terms, the raw bass performance of the two subwoofers sitting next to each other across the corner will be the same as two stacked, so why risk slipping a disk trying to lift one up?

Basically, it's an extension of working with the room in the way the corner position does, with a couple of added benefits.

If there is one dimension that corner placement (or all other placements for that matter) does not deal with, it's that of the floor to ceiling - normally somewhere in the 2.4-2.7m region which correlates with the 60-70Hz region. Of course, being in the corner on the floor has removed the floor's contribution first reflection, just as it did with the two adjacent walls, but stacking goes further.

The subwoofer effectively act as a point source, with a spherical wavefront, restricted by the walls and floor. When you stack subwoofers, this spherical wavefront starts to behave more like a cylinder emanating from a line source. Stack them all the way to the ceiling to achieve a cylindrical wavefront, you then get a phenomenon where bass power only halves with a doubling of distance, rather than quarters. So, perversely, you can play the full stack quieter, for the same perceived bass at the listening position, meaning it's actually less intrusive in the rest of the house. The full stack also completely removed the floor and ceiling from the room mode equation, making it by far the easiest arrangement to EQ.

Even if we rewind to having just two stacked subwoofers, you've gone a long way in terms of improving all of the possible parameters that you can. You have gained the most you can in headroom and distortion terms. There are no differential path lengths to make EQ difficult. You are moving toward a cylindrical wavefront, simplifying EQ and reducing time domain distortions from first reflection from the ceiling, improving impact, texture and timing.

### *But That Looks Awful!*

Nobody said this was an absolute, just the least compromised in acoustic terms. The reality of a harmonious domestic existence may decide otherwise, so side by side is a close second best, with any position that moves the subwoofers apart, progressively worse.

We will note that there are many other combinations of multiple subwoofer installations including one in each corner, or the center of each wall. However, we would suggest that whilst these ape the staggering results that can be achieved in a professional install with a high end processor (and very expensive measurement and off-board correction equipment) simply positioning the subs so and hoping an automated EQ will sort it out, is still a long way from being a practical reality.

### *Conclusion?*

The conclusion is a mix of standard recommendations and our, electro-acoustic engineering focused approach to our subwoofers.

We could in some cases recommend a single 1723 Subwoofer 2 over a couple of 1723 Subwoofer 1's, if you're gong to spread them apart. Or a couple of stacked Subwoofer 1's over a Subwoofer 2 in terms of in room response. The ultimate bass experience is enough stacked Subwoofer 2S or 2V to reach your ceiling! There are many combinations to bass nirvana.

That's just a few of the combinations we can think of and of course, we can't see the possibilities or restrictions of every room out there. No two rooms are the same and that's why, ultimately there is no one-size-fits-all approach to subwoofers.

We encourage everyone to get in touch with us at ***support@arendalsound.com*** to get expert help on choosing the right Arendal Sound subwoofer(s) for you and placement options.

PREPARED FOR MAYHEM

# HOW TO CONNECT

## *How to connect the subwoofer*

**Connecting to a stereo setup**
Depending on your subwoofer layout, we recommend two different methods of connecting the subwoofer(s) for a normal stereo playback system, where there is no dedicated subwoofer output from the source.

**Single subwoofer connection**
When hooking your subwoofer up to an existing stereo setup, where there is no dedicated subwoofer output from your source we recommend that you use both L and R variable outputs (output level controlled by the amplifier volume control) from the source into the subwoofers amplifier. This will ensure that the signal is correctly summed as a mono signal to the subwoofer. If only using the L or R signal some of the bass may disappear as some songs have independant bass tracks on the Left and Right channel causing only one of them to be heard through the subwoofer instead of a summed mix.

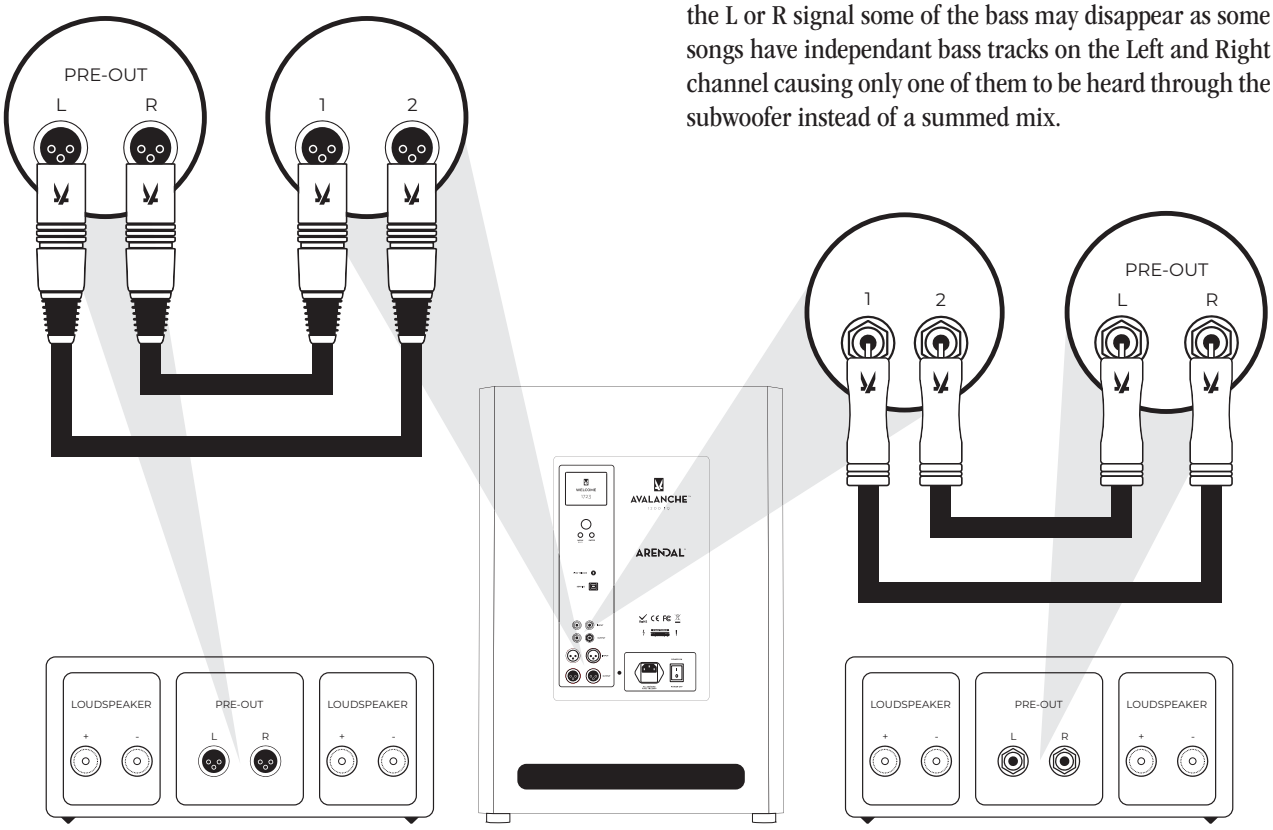

**Dual subwoofer connection**

When using two separate subwoofers in a music system we recommend using L and R outputs to each subwoofer (L goes to left subwoofer, R goes to right subwoofer) instead of summing a mono signal on each subwoofer if they are located on each side of the front speakers. This will ensure a true stereo image throughout the entire frequency spectrum. Note that this method is not recommended if using the two subwoofers in any other configuration than on each side of the room close to the main speakers. For any other configuration we recommend summing a mono signal to each subwoofer.

If both subwoofers are placed at the same position (side by side or stacked), we recommend summing the signal to mono to both subwoofers.

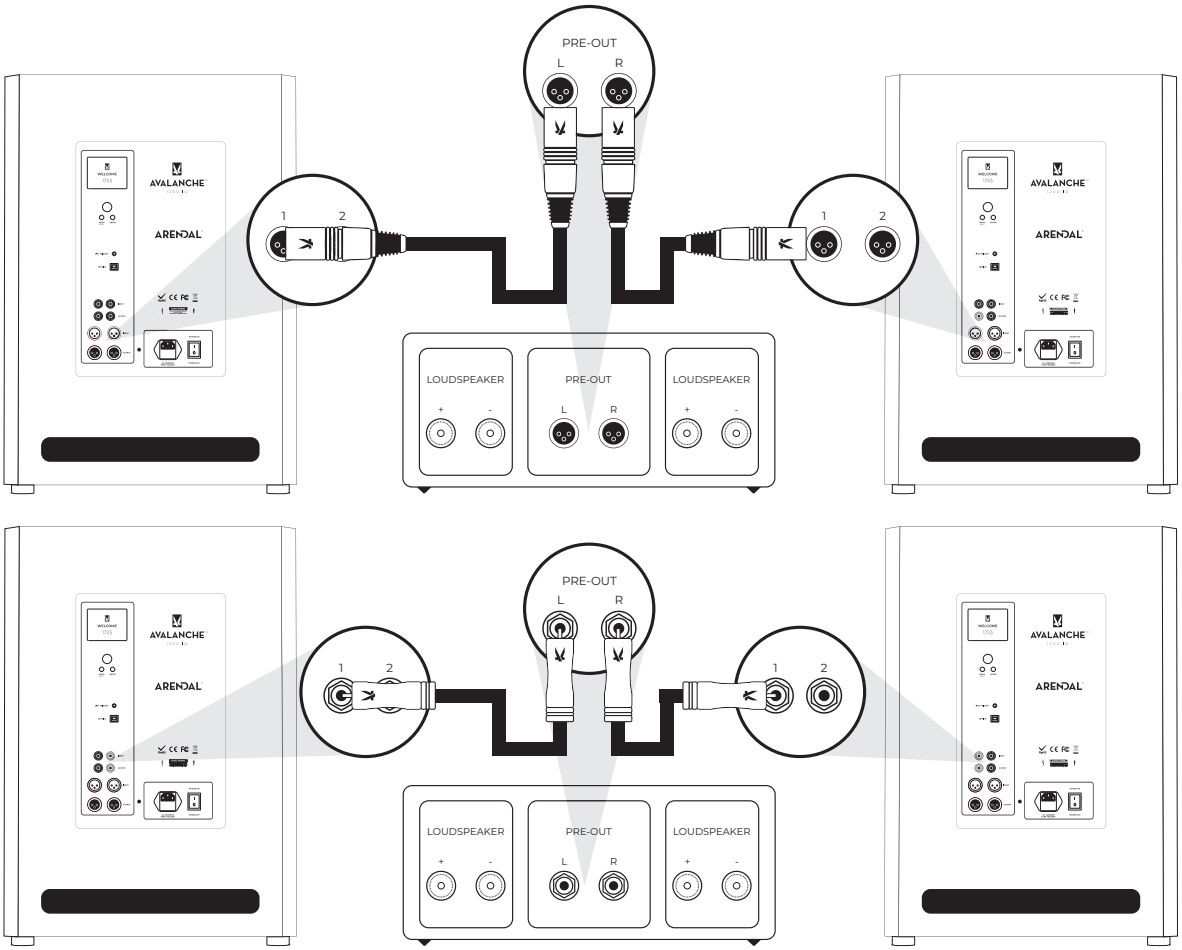

**Connecting to an A/V-Receiver**

For a typical AV Receiver/Processor connection, we recommend using a single RCA (fig. 1) or XLR cable between the receiver's Subwoofer output (SW Out, LFE Out or similar, please refer to your product manual) and connect to the LFE input on the subwoofer amplifier. Where an AVR/Processor has two or more subwoofer outputs, only use one to each subwoofer. There is no advantage in using two outputs into one subwoofer.

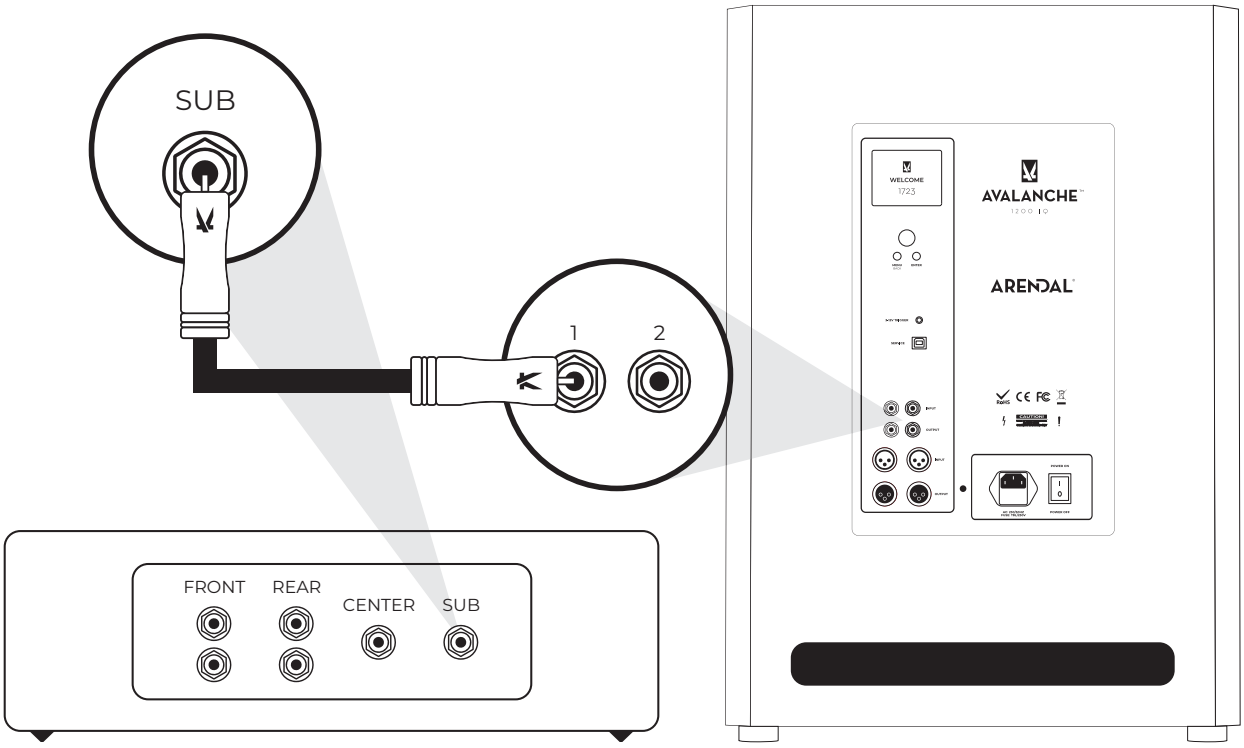

**Unique combined A/V-Receiver and Stereo system connection**

The Avalanche 800/1200 IQ amplifier has the ability to utilize two separate systems on the subwoofer inputs. You can use the trigger signal to assign one of the inputs when it has a signal, and when it does not it will automatically connect to the other input when it receives a signal. This means you can have one subwoofer and use it both for your home cinema system as well as your separated stereo system.

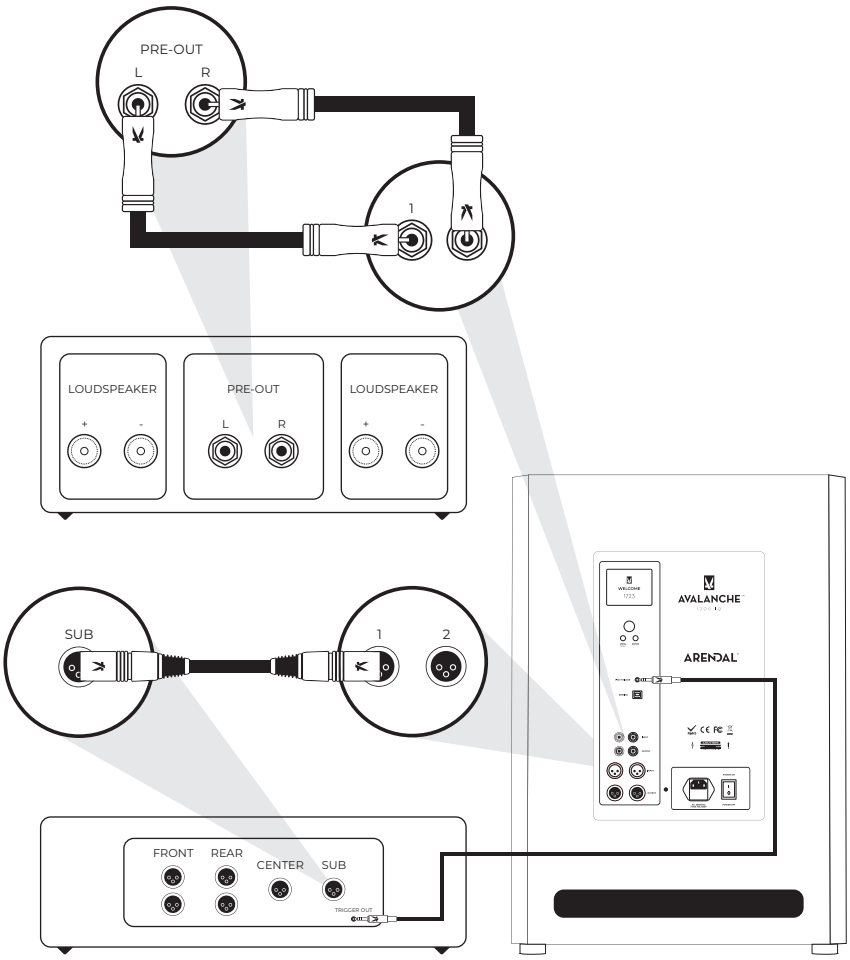


## *Subwoofer operation*

Enclosure tuning on Subwoofer 1V/2V offers the ability to be used with either vented or sealed alignments. By removing the foam plug from the port, low frequency output can be extended with different bass character. The subwoofer offers greater deep bass extension and more power as a vented design. As a sealed enclosure it offers even better transient response and a smoother roll-off that may suit music listeners and/or smaller rooms better.

# AMPLIFIER OPERATIONS AVALANCHE 800IQ/1200IQ

## *Quick panel overview*

1. **High resolution 2.6” LCD colour display.**
2. **Adjustment knob** - To navigate the menu.
3. **Menu & Back button** - Enter the menu or back from settings/menu.
4. **Enter button** - Enter any setting in the menu or entering submenus.
5. **3-12V trigger** - Triggers the subwoofer unit on/off.
6. **Service input** - USB input for uploading firmware.
7. **Input 1 & 2** - RCA inputs.
8. **Output 1 & 2** - RCA outputs.
9. **Input 1 & 2** - XLR inputs.
10. **Output 1 & 2 -** XLR outputs.
11. **Power inlet** - With fuse holder.
12. **Mains power switch** - On and off.

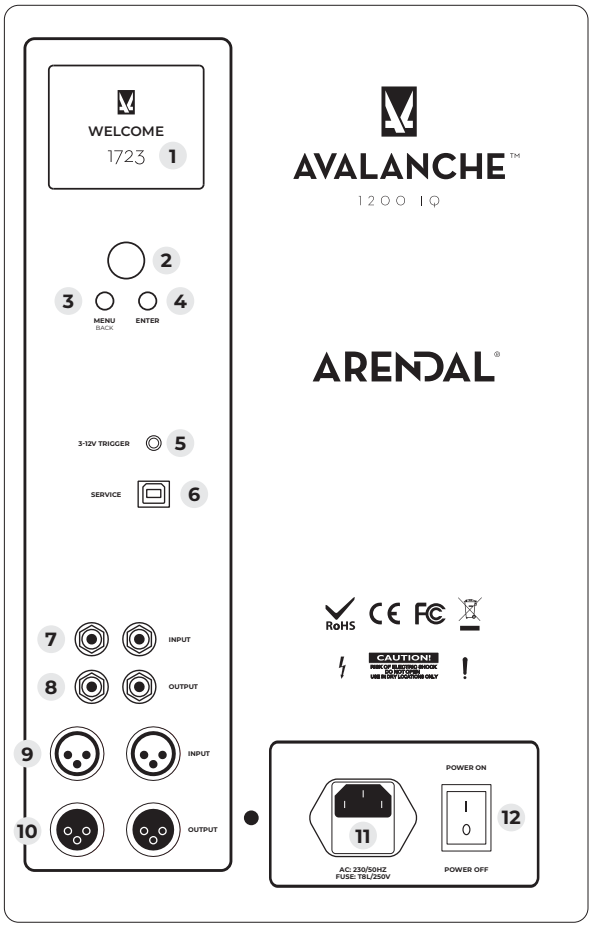

## *Amplifier operations*

When the amplifier has been turned on, and the greeting has been presented, the amplifier is ready to use. To check its status simply press any button or use the adjustment knob to activate the LCD screen. From there you can enter the menu by using the "MENU" button.

To store any settings in the menu, press enter. By pressing the Menu/Back button, any adjusted setting will not be saved.

## *Menu*

When you enter the menu, you will be prompted whether to do settings for RCA or XLR inputs. The reason being each input has their specific memory assigned to them, that will automatically be triggered based on your input trigger settings.

## *Main Menu*

**1. Levels**

- Adjusting input gain and output levels of the subwoofer.

**2. Crossover**

- Setting desired Low Pass Frequency, Phase and Signal invert.

**3. Parametric EQ**

- 7 band parametric equalizer for optimizing the subwoofers frequency response to your room.

**4. Input / Turn-on**

Make settings for which input is active under different scenarios. You can even use the subwoofer in two separate systems with automatic triggering between them.

**5. Setup**

- Memory bank, Number of subs, On Time, Wake-up Sensitivity, Display Rotate, Backlight and Firmware version.

**6. Reset All**

- Resets all stored settings back to factory default.

| Main Menu |
| --- |
| Levels |
| Crossover |
| Parametric EQ |
| Input / Turn-on |
| Setup |
| Reset all |

## *Levels Menu*

**1. Ref. Levels**

- On/off, this sets the subwoofer level to reference position, which is typically the standard for most AV equipment standard calibration levels. We recommend using this setting for anyone with home cinema processors or receivers.

**2. Master Level**

- Adjustable output volume from -20dB to +20dB in 0.5dB increments. Only available if Ref. Level is set to off.

**3. Input Gain**

- The input gain will correctly adjust the subwoofer amplifier input gain according to how high the output is from your source. If you know how high the output gain is from your source, here is how to adjust it properly; 1V output set to +6dB, 2V output set to 0dB, 4V output set to -6dB, or 8V output set to -12dB. The -6dB setting works well with most modern AV equipment as their output levels generally are around 4-8V. Analog preamps typically has a lower output voltage.

| Levels |
| --- |
| Ref. Level |
| Master Level |
| Input Gain |

## *Crossover Menu*

**1. EQ Mode – EQ1, EQ2 & EQ3**

3 modes for sealed subwoofers, 6 modes for vented subwoofers as they can be used in vented or sealed mode.

- EQ1 - gives a flat ground plane response to under 20 Hz, which will give great emphasis on the deepest bass in-room. For movies this can be especially appealing. We recommend this setting for larger rooms.
- EQ2 – Half an octave above the EQ1 setting, so for example if on EQ1 the subwoofer has a +-3dB point of 16Hz, the EQ2 setting will have a +-3dB point of 24Hz. For medium large rooms and/or to suit your personal listening style, the EQ2 setting can be beneficial. Typically, EQ2 setting will sound "faster" than EQ1 as it has a lack of output in the deepest bass which will give the bass a heavier sound to it.
- EQ3 – One octave above the EQ1 setting, so for example if on EQ1 the subwoofer has a +-3dB point of 16Hz, the EQ3 setting will have a +-3dB point of 32Hz. We recommend this setting for smaller rooms and/or to get a "faster", more musical and punchy sounding bass.

| Crossover Menu |
|---|
| EQ Mode |
| LPF Bypass |
| LPF Frequency |
| LPF Slope |
| Subsonic Filter |
| Subsonic Filter Slope |
| Phase |
| Signal Invert |

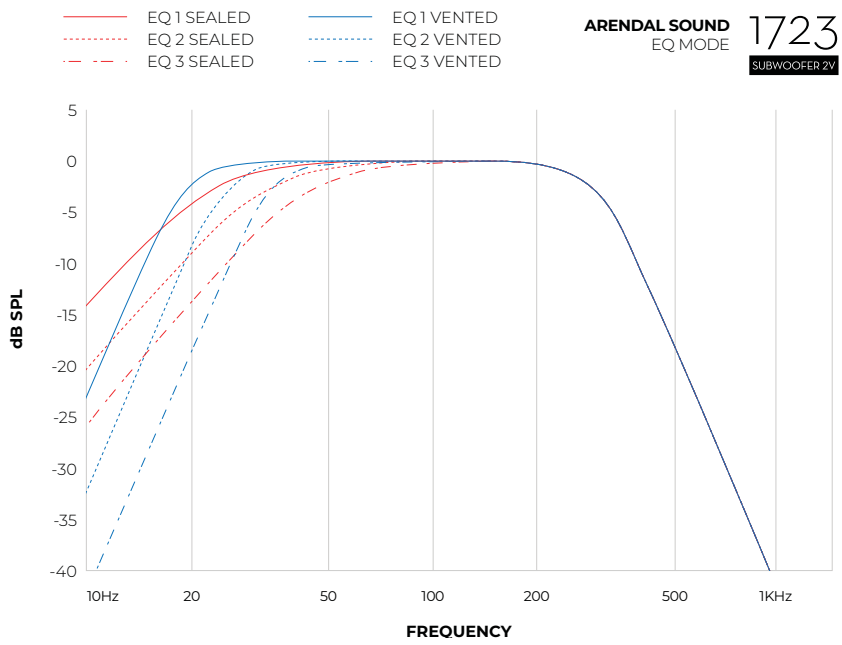


***Here you can see an example of our Subwoofer 2V, the blue lines indicate vented use for 3 EQ modes, and red lines for sealed modes.***

**2. LPF Bypass**

- On/Off. If On is selected, then the Low Pass Filter will be disabled. For Home Cinema use, where an AVR is used we recommend LPF Bypass – On. For stereo users you may leave this setting Off, so you can adjust the Low Pass Filter under next step.

**3. LPF Frequency**

- The Low Pass Frequency is adjustable from 30 Hz to 160 Hz in 1 Hz increments. The number chosen here means the frequencies above will be filtered away to avoid high tones coming from your subwoofer – nobody wants to hear Diana Krall's voice through the subwoofer anyways...

**4. LPF Slope**

- The Low Pass Frequency Slope mean at which rate the frequencies should be tapering off, from the LPF Frequency point chosen. It is adjustable from 6dB/Oct to 24dB/Oct with 6dB increments. So, if you already set the LPF frequency to 100Hz, then setting the LPF Slope to 12dB/Oct will ensure that the signal has 12dB lower output at one octave above 100Hz (one octave above 100Hz is 200Hz).

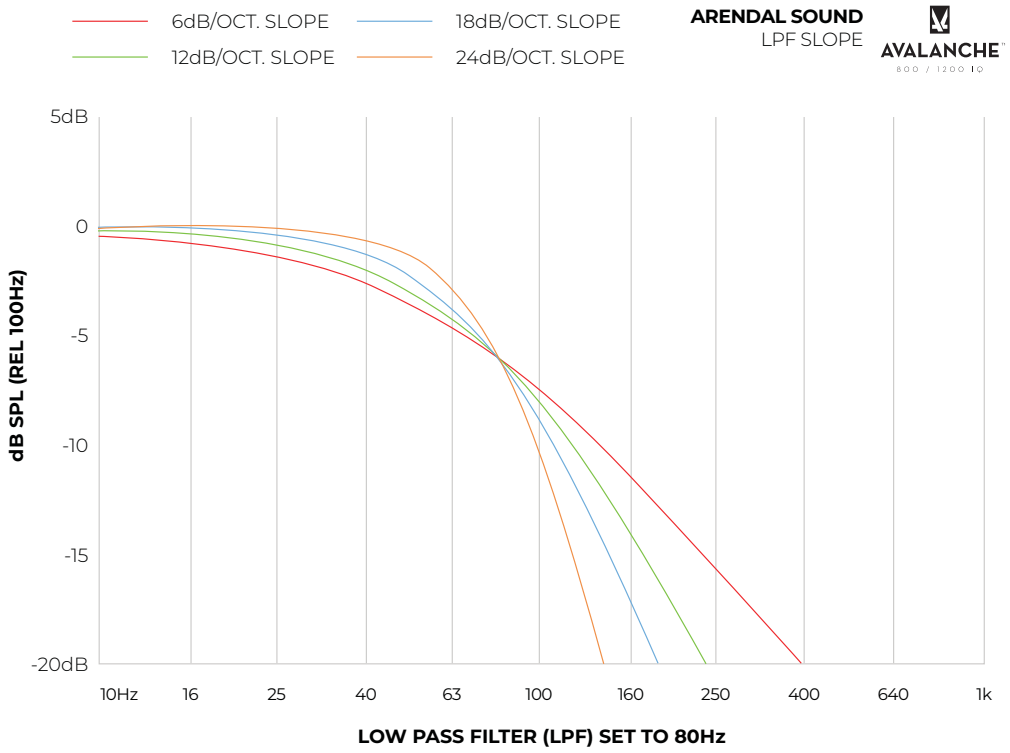


***Here you can see the different slopes and how they affect the frequency response above the LPF frequency you have set.***

**5. Subsonic Filter**

- Selectable subsonic filter settings, that will filter away the deepest frequencies. Selectable from 12 Hz to 31 Hz. In off mode the amplifier has an internal subsonic filter at 10 Hz to prevent instabilities in the power supply. Adding the subsonic filter will ensure the subwoofer has less excursion in the deepest bass, and typically when filtering away some of the deepest bass it will sound even "tighter".

**6. Subsonic Filter Slope**

- The Subsonic filter slope mean at which rate the frequencies should be tapering off, from the frequency point chosen. It is adjustable 6dB/Oct or 12dB/Oct. So, if you already set the subsonic filter frequency to 20Hz, then setting the slope to 12dB/Oct will ensure that the signal has 12dB lower output at one octave under 20Hz (one octave above 20Hz is 10Hz).

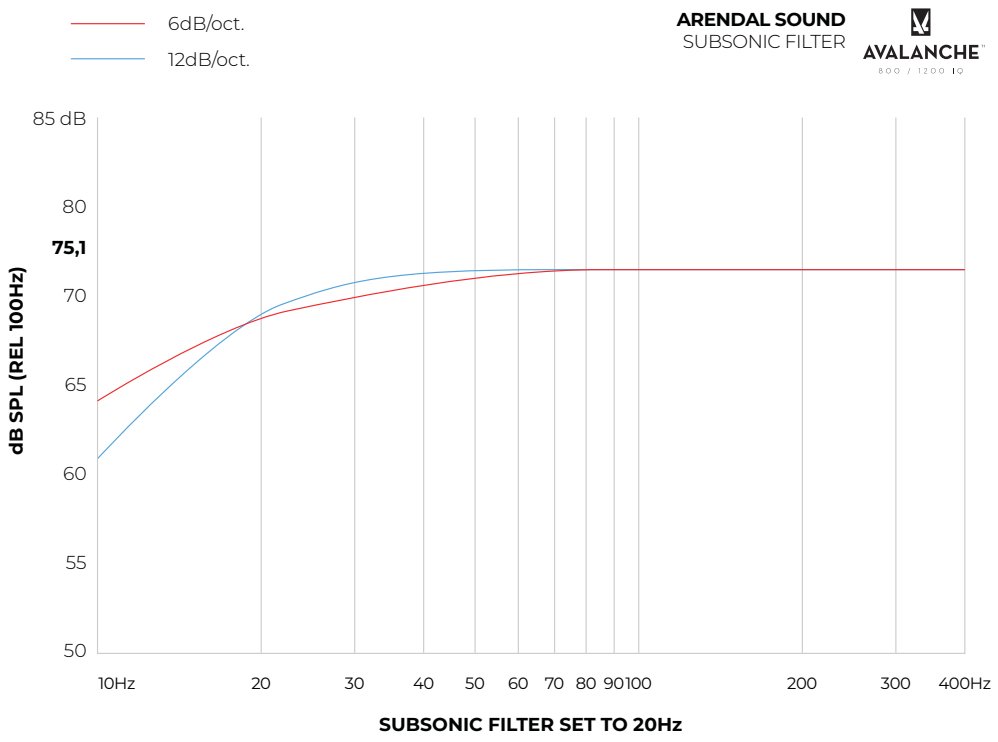


***In this example you can see how the frequencies below 20Hz are affected by adjusting from 6dB/oct. slope to 12dB/oct.***

**7. Phase**

- Adjustable from 0-180 degrees. We recommend leaving the phase at 0 degrees when using an AV-Receiver/Processor with time alignment (speaker distance) feature. For music setups the phase needs to be adjusted so the subwoofer blends with the front speakers.

Pro tip; Have a friend/wife/mom help adjusting the phase while you sit in your listening position. Play some music with a steady bass beat, and when you hear the most amount of bass, the phase is correctly adjusted.

**8. Signal Invert**

- This feature inverts the signal, which means the same as 180 degrees phase, however this is “true” 180 degrees at all frequencies. Phase adjusting above will shift somewhat with frequency.

## *Parametric EQ*

**1. Band**

- 7 selectable EQ bands, to optimize frequency response in your room.

**2. Freq.**

- Adjustable frequency from 12 to 200 Hz, in 1 Hz increments. This enables a pinpointed adjustment of any irregularities in the room response.

**3. Q**

- The Q of a frequency adjustment means how wide or small area surrounding the selected frequency you want to affect. A very high Q will target a very small surrounding area of the selected frequency, whereas a very low Q will select a very wide area surrounding the selected frequency.

**4. Gain**

- Adjust how much you want to increase or decrease the levels at the selected frequency. Selectable from -10 dB to +3dB.

**5. On**

- On/Off selectable to choose whether the EQ band should be enabled or not.

**Parametric EQ**

| Band | Freq. | Q | Gain | On |
|---|---|---|---|---|
| 1 | 12-200 | 0.30-10 | -10.0 - +3.0 | On / Off |
| 2 | 12-200 | 0.30-10 | -10.0 - +3.0 | On / Off |
| 3 | 12-200 | 0.30-10 | -10.0 - +3.0 | On / Off |
| 4 | 12-200 | 0.30-10 | -10.0 - +3.0 | On / Off |
| 5 | 12-200 | 0.30-10 | -10.0 - +3.0 | On / Off |
| 6 | 12-200 | 0.30-10 | -10.0 - +3.0 | On / Off |
| 7 | 12-200 | 0.30-10 | -10.0 - +3.0 | On / Off |

***The graph shows how adjusting the Q settings affects the frequencies above and below the selected frequency you want to adjust. Using a low Q will affect a large bandwidth of frequencies, while a higher Q will only affect areas near the selected frequency.***

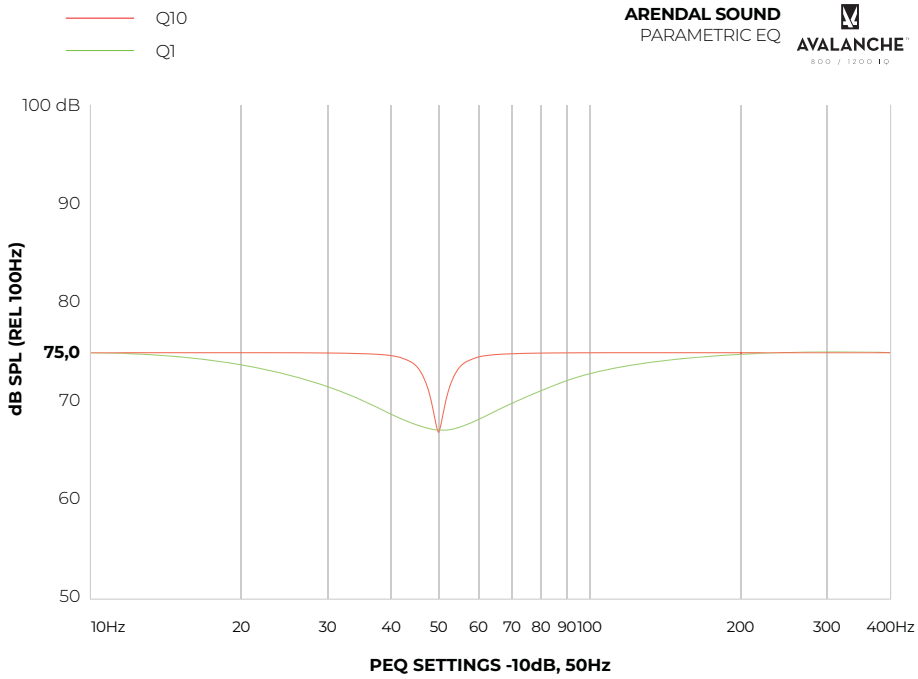

## *Input / Turn-on*

Selectable input turn on process, choose from 4 different Auto-on modes, 4 different 12V trigger modes and 8 different Dual Source modes. The Dual Source turn-on control is created for customers that use the same subwoofer in two systems, one typically being stereo and the other being home cinema. This setting enables one input to be triggered and locked by 12V signal, and when the 12V signal is turned off, the other input will be active for auto-on function.

| Input/Turn-on Control | | |
|---|---|---|
| **Mode** | **Auto turn-on** | **Mode 1** |
| RCA 1 | Auto turn-on | 12V Trigger |
| RCA 2 | Auto turn-on | 12V Trigger |
| XLR 1 | Auto turn-on | 12V Trigger |
| XLR 2 | Auto turn-on | 12V Trigger |

**1. Auto Turn-on modes**

- There are 4 different modes, where you can choose RCA or XLR input(s) to be automatically turned on when the subwoofer senses a signal on the input. If you have a single subwoofer output from your source, then select either RCA 1 or XLR 1 as the input depending on the type of connection you have from your source. Only choose RCA 1 & RCA 2 / XLR 1 & XLR 2 if you are using a stereo source with left & right signal.

**2. 12V Trigger modes**

- There are 4 different modes, where you can choose RCA or XLR input(s) to be turned on when the subwoofer senses a 3-12V signal on the 3.5mm trigger input. Connect the 3-12V trigger out from your source to the trigger input on the amplifier panel to let it activate as soon as you turn on your source. If you have a single subwoofer output from your source, then select either RCA 1 or XLR 1 as the input depending on the type of connection you have from your source. Only choose RCA 1 & RCA 2 / XLR 1 & XLR 2 if you are using a stereo source with left & right signal.

**3. Dual Source modes**

- If you are using two different sources together with your subwoofer, this is the correct input setting to choose. There are 8 different modes where you can choose the modes that suit your needs. You will have to use one source on RCA and the other source on XLR. If both your sources use RCA outputs, you will have to use an RCA to XLR adapter for one of them.

One source has to be activated by the 3-12V trigger signal via the 3.5mm jack input on the amplifier, while the other source has to be activated through auto turn-on. As soon as the 12V on the trigger input is deactivated, the amp will switch over to the other input as soon as it senses a signal there. When the 3-12V signal is activated again it will override the auto turn-on input. Only one source will be possible to hear through the subwoofer at a time.

The chosen memory setting for RCA is what it will automatically go to when you are utilizing the RCA inputs. The chosen XLR memory is what the amplifier will automatically select when it goes over to XLR input(s). This means you can have two separate inputs with completely individual settings for volume, EQ etc. to suit both systems perfectly.

## *Setup*

| Setup Menu |
| --- |
| Memory Bank |
| Number of Subs. |
| On Time |
| Wake-up Sens. |
| Display Rotate |
| LCD Backlight |
| Firmware ver. |

**1. Memory bank**

- RCA 1 / RCA 2 or XLR 1 / XLR 2. You can choose between these 4 memory settings. When you enter the menu, you have to choose either RCA or XLR settings, and thus you are only able to select RCA memory if you chose RCA inputs when entering the menu, and the same applies to XLR.

**2. Number of subs**

- This setting is only enabled if you have chosen Reference level On, in the level menu. This setting will enable 1, 2, or 4 subwoofers to have reference level in room, for ease of adjustment from an AVR or similar source. It will decrease the output sensitivity of each subwoofer to come as close as possible for the sum of all subwoofers to reference level for a single subwoofer used alone

**3. On Time**

- Selectable on time from 5 to 60 minutes, in 5-minute increments. This setting adjusts how long after the amplifier will stay active after it has received a signal on the input(s) (Auto-on mode only).

**4. Wake-up Sens.**

- The wake-up sensitivity when the amplifier is in Auto-on mode, High sensitivity means it react very easily to any input signal, Normal is what typically works well with modern AV receivers and similar sources, and Low is for environments that require a slower wake-up sensitivity. The input gain under “level” menu will also impact the subwoofers sensitivity to turn on.

**5. Display Rotate**

- This neat feature rotates the display upside down, so that it is easier to make adjustments when the subwoofers amplifier is facing the wall and you are standing above it to do any final adjustments. When the 180 degree setting is entered you will have to go one step back in the menu before it actually flips upside down.

**6. LCD Backlight**

- Adjustable backlight on the LCD display from dim to bright.

**7. Firmware Ver.**

- States the firmware version of the amplifier.

## *Reset All*

Reverts all changes back to default settings. This will erase all memory bank settings as well.

# SAFETY INSTRUCTIONS

- Read these instructions.
- Keep these instructions.
- Heed all warnings.
- Follow all instructions.
- **Do not shower or bathe (with) this product. It does not like water nor soap.**
- Do not restrict the natural ventilation for this product. Do not cover amplifier plate with polar bear hide or similar as this product is built to handle even the cold northern climates without such heating devices.
- **Large house pets like dogs, big cats or bears should be trained not to cuddle or sleep against this product to avoid overheating, scratches and bite marks.**
- Clean this product only with dry cloth.
- Do not install near any heat sources such as an open fireplace, radiators, heat registers, stoves, or other apparatus (including amplifiers) that produce heat.
- Protect the power cord, signal cables or speaker cables from being walked on, chewed on or pinched particularly at plugs and the point where they exit from the apparatus.
- Only use attachments and accessories specified by the manufacturer.
- Unplug this apparatus during lightning storms or when unused for long periods of time.
- Refer all servicing to qualified service personnel. Servicing is required when the apparatus has been damaged in any way, such as power-supply cord or plug is damaged, liquid has been spilled or objects have fallen into the apparatus, the apparatus has been exposed to rain or moisture, does not operate normally, or has been dropped.
- Check that there are no cables under the carpet that may be damaged by the spike/cone feet. Do not walk the product on the spike feet as this may cause them to become detached from the cabinet and cause damage. Take care not to impale yourself with the spike feet.
- Do not place this product on an unstable stand, tripod, bracket or table. The product may fall causing serious injury and serious damage. Any mounting of the product should follow the manufacturer's instructions.

- For continued protection against fire hazard, use fuses only of the correct type and rating. Mains fuses are located inside the appliance as well as on its back panel. Replacement of the internal fuse should be entrusted to an authorized operative. User-replaceable fuse types are shown in the specification.
- WARNING: To reduce the risk of fire or electric shock, this apparatus should not be exposed to rain, snow or moisture and objects filled with liquids, such as vases, should not be placed on this apparatus.
- The mains plug of the power supply cord shall remain readily operable.
- WARNING: This product is capable of producing very high sound pressure levels. Please exercise restraint in its operation to prevent hearing damage.

**CAUTION!**

RISK OF ELECTRIC SHOCK
DO NOT OPEN
USE IN DRY LOCATIONS ONLY

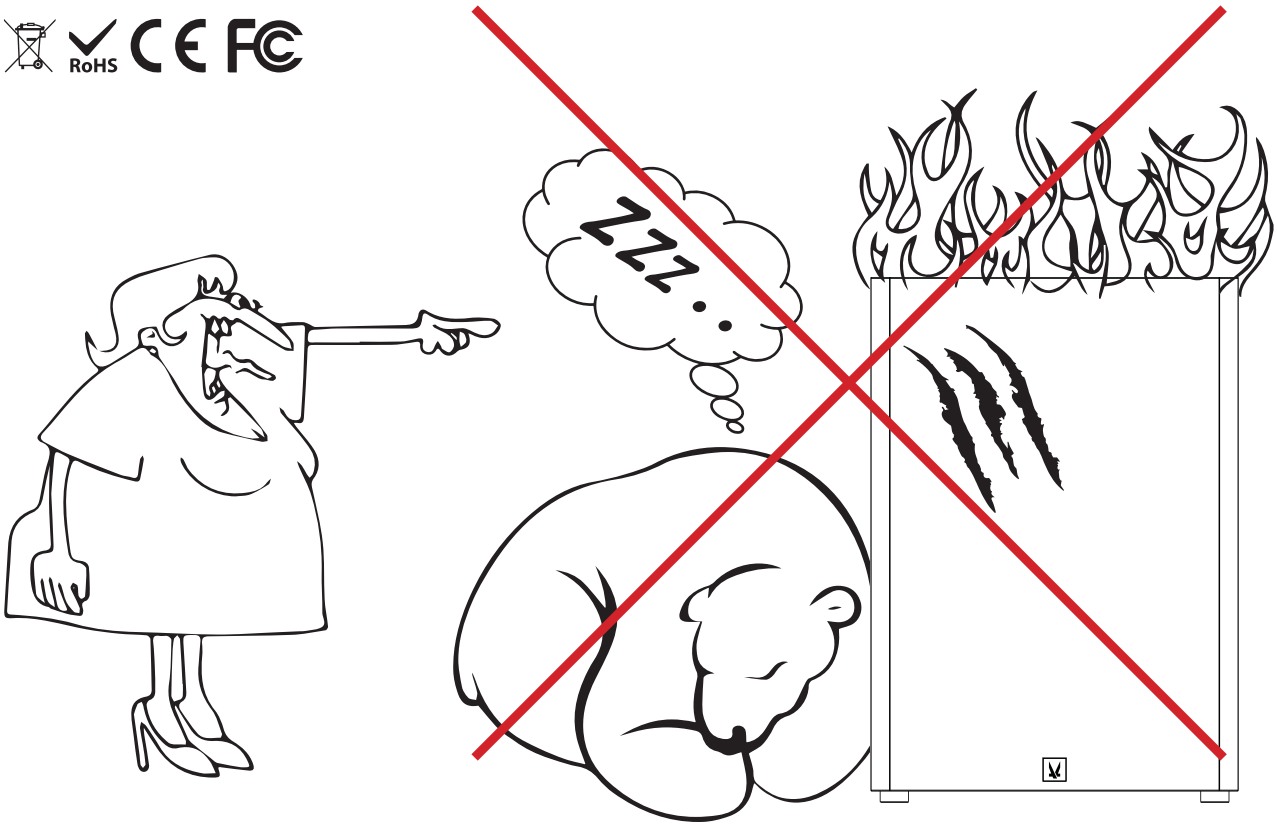

# SICHERHEITSANWEISUNGEN

- Lesen Sie diese Anweisungen.
- Bitte diese Anweisungen aufbewahren.
- Folgen Sie diese Anweisungen.
- Bitte alle Warnungen beachten.
- Nehmen Sie keine Dusche oder Bad mit diesem Produkt. Es mag weder Wasser noch Seife.
- Die natürliche Durchlüftung darf nicht eingeschränkt werden. Dieses Produkt kann selbst die Kälte des Nordens ohne Kälteschutzmaßnahmen vertragen und darf daher mit einem Bärenfell oder ähnliches nicht bedeckt werden.
- Große Haustiere wie Hunde, Katzen oder Bären müssen abgerichtet werden, nicht mit diesem Produkt zu kuscheln oder neben dem Produkt zu schlafen, um Überhitzung, Kratzer oder Bissspuren zu vermeiden.
- Reinigen Sie dieses Produkt ausschließlich mit einem trockenen Tuch.
- Halten Sie dieses Produkt fern von Hitzequellen wie offenem Feuer, Heizungskörper, Kachelöfen oder anderen wärmestrahlenden Geräten, einschließlich Audioverstärker.
- Schützen Sie das Stromkabel, die Cinchkabel oder Lautsprecherkabel gegen Bissen, Tritten oder Quetschungen, insbesondere an Steckverbindungen und in der Nähe des Geräts.
- Verwenden Sie ausschließlich vom Hersteller spezifiziertem Zubehör.
- Trennen Sie dieses Produkt vom Strom während Gewittern oder bei längeren Zeiten ausser Betrieb.
- Jegliche Wartungen und Reparaturen müssen vom Fachpersonal durchgeführt werden. Reparaturen sind bei jedem Defekt notwendig, z.B. Schaden am Stromkabel, beschädigte Stromstecker, Flüssigkeitseintritt, kleine Objekte verloren im Produkt, Aussetzung des Regens oder der Feuchtigkeit, Fehlbetrieb oder Sturz des Produkts.
- Stellen Sie sicher, dass keine Kabel unter dem Teppich durch die Gerätefüße beschädigt werden. Bewegen Sie das Produkt nicht auf die Gerätefüße, da sie dadurch vom Gehäuse gelöst werden können und Schäden verursachen können. Vermeiden Sie, sich selbst mit den Gerätefüße aufzuspießen.
- Stellen Sie das Produkt nie auf unstabile Ständer, Stative, Tische oder Halterungen. Das Produkt kann in dem Fall stürzen und ernste Schäden/ Verletzungen herbeiführen. Die Anbringung bzw. das Aufstellen des Produkts darf ausschließlich nach den Anweisungen des Herstellers folgen.
- Um Brandgefahr zu vermeiden dürfen nur Sicherungen mit der passenden Spezifikationen verwendet werden.
- Die Netzsicherungen befinden sich im Gerät, sowie auf der Rückseite. Netzsicherungen im Gerät dürfen nur durch autorisiertes Fachpersonal ausgetauscht werden. Durch den Benutzer austauschbare Sicherungen werden in der Produktspezifikation angegeben.
- WARNUNG: Um Stromschlag oder Brandgefahr zu vermeiden, darf dieses Gerät dem Regen, der Schnee oder der Feuchtigkeit nicht ausgesetzt werden. Vasen oder andere Gefäße mit Flüssigkeiten dürfen auch nicht auf dieses Gerät gestellt werden.
- Der Stecker des Netzkabels muss jederzeit zugänglich bleiben.
- ACHTUNG: Dieses Produkt kann sehr hohe Schallpegel erzeugen. Mäßigung im Hörpegel über längere Zeiten ist angebracht, um Gehörschäden zu vermeiden.

# SIKKERHETSINSTRUKSJONER

- Les disse instruksjonene.
- Ta vare på disse instruksjonene.
- Vær oppmerksom på alle advarsler.
- Følg alle instruksjonene.
- Ikke bad (med) dette produktet. Det liker ikke hverken vann eller såpe.
- Ikke begrens den naturlige ventilasjonen for dette produktet. Ikke tildekk forsterker platen med isbjørnpels eller liknende, da produktet er bygget for å håndtere selv de kaldeste nordlige klima uten slike varmeprodukter.
- Store husdyr som hund, katt eller bjørn må læres opp til å ikke kose eller sove mot produktet for å unngå overoppheting, skrap og bitemerker.
- Rens produktet kun med en tørr klut.
- Ikke installer nær varmekilder som åpent ildsted, varmeovn, peis eller andre apparater (inklusive forsterkere) som produserer varme.
- Beskytt strømkabelen, signalkabler eller høyttalerkabler fra å bli tråkket på, tygd på eller lagt i klem, spesielt nær plugg eller der de stikker ut fra apparatet.
- Benytt kun tilleggsutstyr og tilbehør som er spesifisert av produsenten.
- Koble apparatet fra strømnettet under tordenvær eller når det ikke skal brukes over lengre perioder.
- Henvis all service til kvalifisert servicepersonell. Service kreves når apparatet har blitt skadet på noe vis, som når en strømkabel eller plugg er skadet, væske har blitt sølt eller objekter har falt ut av apparatet, apparatet har vært utsatt for regn eller fuktighet, ikke har normal funksjonalitet, eller har fått støt.
- Sjekk at det ikke er kabler under teppet som kan være skadet av spike/kone føtter. Ikke flytt produktet på spike føttene da det kan føre til at de faller av kabinettet og forårsaker skade. Ta hensyn slik at du ikke blir blir spiddet av spike føttene.
- Ikke plasser dette produktet på ustabilt stativ, tripod, brakett eller bord. Produktet kan falle og forårsake seriøs skade. Montering av produktet skal følge produsents instruksjoner.
- For kontinuerlig beskyttelse mot brannfarer, bruk kun den korrekte type og verdi på sikringen(e). Hovedsikringene er lokalisert både på innsiden av produktet i tillegg til på panelet. Erstatning av de interne sikringene må gjøres av autorisert personell. Sikringer som kan byttes av bruker er vist i spesifikasjonene.
- ADVARSEL: For å redusere faren for elektrisk støt, må apparatet ikke utsettes for regn, snø eller fuktighet og gjenstander fylt med væske slik som vaser, skal ikke plasseres på apparatet.
- Strømkabelen til strømforsyningen skal være lett tilgjengelig.
- ADVARSEL: Dette produktet kan yte veldig høye lydtrykk. Vennligst vis aktsomhet for å unngå hørselsskader.

# INSTRUCCIONES DE SEGURIDAD

- Lea estas instrucciones.
- Guarde estas instrucciones.
- Siga todas las advertencias.
- Siga todas las instrucciones.
- No se duche o bañe con este producto. El agua y el jabón dañarán este producto.
- No impida la ventilación natural de este producto. No cubra el amplificador con una piel de oso polar o una protección contra el frío similar. Este producto está diseñado para resistir incluso el clima frío del norte sin necesidad de calentadores.
- Animales domésticos de gran tamaño como perros, gatos o incluso osos han de ser instruidos para que no se acurruquen o duerman pegados a este producto para evitar sobrecalentamiento, rayaduras o marcas de dientes.
- Limpie este producto exclusivamente con un paño suave y seco.
- No instale este producto junto a fuentes de calor como radiadores, chimeneas, hornos u otros aparatos que produzcan calor (amplificadores incluidos).
- Proteja el cable de alimentación, los cables de señal y los cables de altavoz ante posibles pisotones, mordiscos o pinzaduras, especialmente cerca de los conectores y de las entradas/salidas del equipo.
- Use tan solo accesorios especificados por el fabricante.
- Desconecte este aparato durante tormentas eléctricas o períodos largos sin uso.
- Remita el equipo a personal cualificado para cualquier reparación. Una reparación será necesaria en caso de cualquier daño, como por ejemplo en el cable de alimentación o su enchufe, líquidos vertidos sobre el equipo, objetos perdidos dentro del equipo, exposición a lluvia o humedad, caídas o funcionamiento defectuoso.
- Compruebe que los cables no son pisados por los pies de apoyo del producto. No traslade este producto sobre sus pies de apoyo, ya que podrían aflojarse y causar daños. Evite empalar cualquier parte de su cuerpo con los pies de este producto.
- No coloque este producto sobre un soporte inestable. El producto podría caer, causando heridas y daños serios. El montaje de este producto ha de seguir las instrucciones del fabricante.
- Use tan sólo fusibles del tipo y especificación correctos a fin de evitar peligros de incendio. Los fusibles están situados dentro de este aparato, así como en su panel posterior. El reemplazo de fusibles debe ser realizado por personal cualificado y autorizado. Los fusibles que pueden ser reemplazados por el usuario se muestran en las especificaciones técnicas.
- ADVERTENCIA: no exponga este aparato a lluvia, nieve, o humedad ni coloque sobre él objetos con líquidos, como jarrones, a fin de reducir el riesgo de fuego o shock eléctrico.
- El enchufe de corriente del cable de alimentación debe permanecer accesible en todo momento.
- ADVERTENCIA: este producto es capaz de general niveles de presión sonora muy elevados. Úselo con la debida contención a fin de evitar daños auditivos.

ARENDAL

# WARRANTY

Luckily for you and for us, Arendal Sound products are extremely durable products which have gone through extreme stress tests during development. However failures may happen and if it does, you will always know we are here to backing you up.

Arendal Sound have up to 10 Years warranty (5 for electronics) which cover all costs for you as a customer within the warranty terms. We are also accepting warranty to follow second hand purchases where sales receipt is proof of purchase which new owner needs to get from original buyer.

All Arendal Sound products can easily be repaired by the customer, by replacing components yourself. This means we may send you the replacement part/module which is needed, instead of sending the complete product back and forth, this saves down time and you will be guided by qualified staff from the Arendal Sound team. We will only ask you to do very simple steps to fix the products and you do not need any servicing experience at all. In the unfortunate event of a product failure, it will usually only take a few days to get the problem fixed.

If you have a problem with your product, please contact ***service@arendalsound.com***, send us the serial number of the product that has a problem and we will help you to identify the defective component.
If we ship you a replacement part for your product, that you can swap out by yourself, we will send pre-paid return labels to return the defective part to us. This part must be returned or you will be invoiced for the replacement part in full. Every cost is covered by us if the product is under warranty. Should you prefer to send the entire product back to us for service - please contact us at ***service@arendalsound.com***. When sending the product back to us it is important that you use the original packaging or something of similar quality. We are not responsible for damage caused by inadequate packaging but we will be helpful with arranging the return shipment.

**Important!**
Do not try to repair the product without permission from us. Disassembling or removing parts from your product(s) in one way or another, can damage your product(s) without the right instructions. It will void your warranty rights.

**Non-authorized sales**
Any sales done outside arendalsound.eu or lsound.eu (or belonging domains) are non- authorized and will therefore not be under our warranty. Please email us at ***sales@arendalsound.com*** if you have any questions.

REGISTER YOUR PRODUCT AT

**ARENDALSOUND.COM/WARRANTY**

TO APPLY FOR 10 YEAR WARRANTY.

FCC Warning Statement

Changes or modifications not expressly approved by the party responsible for compliance could void the user's authority to operate the equipment. This equipment has been tested and found to comply with the limits for a Class B digital device, pursuant to Part 15 of the FCC Rules. These limits are designed to provide reasonable protection against harmful interference in a residential installation. This equipment generates uses and can radiate radio frequency energy and, if not installed and used in accordance with the instructions, may cause harmful interference to radio communications. However, there is no guarantee that interference will not occur in a particular installation. If this equipment does cause harmful interference to radio or television reception, which can be determined by turning the equipment off and on, the user is encouraged to try to correct the interference by one or more of the following measures:

- Reorient or relocate the receiving antenna.
- Increase the separation between the equipment and receiver.
- Connect the equipment into an outlet on a circuit different from that to which the receiver is connected.
- Consult the dealer or an experienced radio/TV technician for help.

This device complies with part 15 of the FCC Rules. Operation is subject to the following two conditions: (1) This device may not cause harmful interference, and (2) this device must accept any interference received, including interference that may cause undesired operation.