BLACK+ DECKER™

BDXRBV660

INSTRUCTION MANUAL

BLACK+ DECKER™

INSTRUCTION MANUAL

ROBOTIC VACUUM CLEANER WITH DOCKING STATION

BDXRBV660

Printed in China
Part No. AL-ML
English

Please read before returning this product for any reason.

Before operating the Vacuum cleaner, please read all safety and operating instructions. Save all instructions in a safe place for future reference.

Definitions: Safety Alert Symbols and Words

This instruction manual uses the following safety alert symbols and words to alert you to hazardous situations and your risk of personal injury or property damage.

⚠ **DANGER**: Indicates an imminently hazardous situation which, if not avoided, **will** result in death or serious injury.

⚠ **WARNING**: Indicates a potentially hazardous situation which, if not avoided, **could** result in death or serious injury.

⚠ **CAUTION**: Indicates a potentially hazardous situation which, if not avoided, **may** result in minor or moderate injury.

⚠ (Used without word) Indicates a safety related message.

NOTICE: Indicates a practice **not related to personal injury** which, if not avoided, **may** result in property damage.

⚠ *WARNING: Some household dust contains chemicals known to the State of California to cause cancer, birth defects or other reproductive harm such as asbestos and lead in lead based paint.*

⚠ *WARNING!* ***Read all safety warnings and all instructions****. Failure to follow the warnings and instructions may result in electric shock, fire and/ or serious injury.*

WARNING: To reduce the risk of injury, read the instruction manual.

IMPORTANT SAFETY INSTRUCTIONS

When using an electrical appliances, basic precautions should always be followed, including the following:

⚠ *WARNING: To reduce the risk of fire, electrical shock or injury:*

- *Shock Hazard. To protect against risk of electrical shock, do not put the vacuum charging base in water or other liquid.*
- *Do not allow to be used as a toy. Never sit or stand on the product. Close attention is necessary when used by or near children.*
- Never modify the product or any part of it. Damage or personal injury could result.
- *Use only as described in this manual. Use only manufacturer's recommended attachments.*
- *Do not use with damaged cord or plug. If appliance is not working as it should, has been dropped, damaged, left outdoors, or dropped into water, return it to a service center.*
- *Do not pull or carry by cord, use cord as a handle, close a door on cord, or pull cord around sharp edges or corners. Do not run appliance over cord. Keep cord away from heated surfaces.*
- *Do not unplug by pulling on cord. To unplug, grasp the plug, not the cord.*
- *Do not allow the cord to hang over the edge of a table or counter or touch hot surfaces. The unit should be placed or mounted away from sinks and hot surfaces.*
- *Do not put any object into openings. Do not use with any opening blocked; keep free of dust, lint, hair, and anythingthat may reduce air flow.*
- *Keep hair, loose clothing, fingers, and all parts of body away from openings and moving parts.*
- *Do not use to pick up flammable or combustible liquids, such as gasoline, or use in areas where they may be present.*
- *Do not pick up anything that is burning or smoking, such as cigarettes, matches, or hot ashes.*
- *Do not pick up toxic material (i.e. chlorine bleach, ammonia, drain cleaner, etc.)*
- *Do not vacuum Toner (for laser printer, copy machines etc.) as there is a risk of fire and explosion.*
- *Do not vacuum plaster, cement etc. as the filter can become blocked.*
- *Do not use the vacuum without all the filters fitted.*
- *Do not operate outdoors. While the vacuum is in operation, make sure all doors leading outside are closed.*
- *Do not incinerate the appliance even if it is severely damaged. The batteries can explode in a fire.*
- *This appliance is intended for household use only and not for commercial or industrial use. Do not operate on wet floor or moist conditions, e.g bathroom. Water and moisture could damage the circuit board.*
- *Do not handle charger, including charger plug, and charger terminals with wet hands.*
- *Use only the charger supplied by the manufacturer to recharge.*
- *Plug the charger directly into an electrical outlet.*
- *Use the charger only in a standard electrical outlet (120V/60Hz).*
- *Unplug the charger from outlet before any routine cleaning or maintenance.*
- *Do not look into the air vents when the unit is switched on, as sometimes there is a possibility of small debris being discharged from the air vents, especially after cleaning / replacement of the filters as debris inside the unit can be disturbed.*
- *Make sure that the vacuum can be worked freely in the room (shall not be blocked or overturned etc...) and make sure that there is nothing that the vacuum can overturn and create a hazard (Clear all candle, Vase (with or without water) and other fragile objects that placed on the floor or furniture).*

ADDITIONAL SAFETY WARNINGS

a) ***Prevent unintentional starting. Ensure the switch is in the off-position before picking up or carrying the appliance.*** *Carrying the appliance with your finger on the switch or energizing appliance that have the switch on invites accidents.*

b) ***Use appliance only with specifically designed battery packs.*** *Use of any other battery packs may create a risk of injury and fire.*

c) ***Under abusive conditions, liquid may be ejected from the battery; avoid contact.***

d) ***Do not use a battery pack or appliance that is damaged or modified.*** *Damaged or modified batteries may exhibit unpredictable behavior resulting in fire, explosion or risk of injury.*

e) ***Do not expose a battery pack or appliance to fire or excessive temperature.*** *Exposure to fire or temperature may cause explosion.*

f) ***Have servicing performed by a qualified repair person using only identical replacement parts.*** *This will ensure that the safety of the product is maintained.*

g) ***Do not modify or attempt to repair the appliance or the battery pack except as indicated in the instructions for use and care.***

SAVE THESE INSTRUCTIONS

Important Safety Instructions for All Battery Packs

WARNING: ***Read all safety warnings and all instructions for the battery pack and charger bace. Failure to follow the warnings and instructions may result in electric shock, fire and/or serious injury.***

- ***Do not charge or use the battery pack/product in explosive atmospheres, such as in the presence of flammable liquids, gases or dust****. Inserting or removing the battery pack from the charger may ignite the dust or fumes.*
- ***NEVER force the battery pack into the vacuum. DO NOT modify the battery pack in any way to fit as battery pack may rupture causing serious personal injury.*** *Consult the chart at the end of this manual for compatibility of batteries and chargers.*
- ***Recharge only with the charger specified by the manufacturer.***
- ***DO NOT splash or immerse in water or other liquids.***
- ***Do not store or use the product in locations where the temperature may reach or exceed 104 °F (40 °C) (such as outside sheds or metal buildings in summer)****. For best life, store product in a cool, dry location.*

  NOTE: Do not store product with the trigger switch locked on. Never tape the trigger switch in the ON position.
- ***Do not incinerate the battery pack/product even if it is severely damaged or is completely worn out****. The battery pack can explode in a fire. Toxic fumes and materials are created when lithium ion battery packs are burned.*
- ***If battery contents come into contact with the skin, immediately wash area with mild soap and water.*** *If battery liquid gets into the eye, rinse water over the open eye for 10 minutes or until irritation ceases.*
- ***Contents of opened battery cells may cause respiratory irritation.*** *Provide fresh air. If symptoms persist, seek medical attention.*

WARNING: *Burn hazard. Battery liquid may be flammable if exposed to spark or flame.*

WARNING: *Fire hazard. Never attempt to open the battery pack for any reason. If the battery pack case is cracked or damaged, do not insert into the charger. Do not crush, drop or damage the battery pack. Do not use a battery pack or charger that has received a sharp blow, been dropped, run over or damaged in any way (e.g., pierced with a nail, hit with a hammer, stepped on). Damaged battery packs should be returned to the service center for recycling.*

Transportation

WARNING: *Fire hazard. Do not store or carry the battery pack so that metal objects can contact exposed battery terminals. For example, do not place the battery pack in aprons, pockets, tool boxes, product kit boxes, drawers, etc., with loose nails, screws, keys, etc.* ***Transporting batteries can possibly cause fires if the battery terminals inadvertently come in contact with conductive materials such as keys, coins, hand tools and the like****. The US Department of Transportation Hazardous Material Regulations (HMR) actually prohibit transporting batteries in commerce or on airplanes in carry-on baggage UNLESS they are properly protected from short circuits. So when transporting individual battery packs, make sure that the battery terminals are protected and well insulated from materials that could contact them and cause a short circuit.*

Recycle Battery

Local, state or federal laws may prohibit disposal of batteries in ordinary trash. Consult your local waste authority for information regarding available recycling and/or disposal options.

Important Safety Instructions for All Battery Chargers

- ***DO NOT attempt to charge the battery pack with any chargers other than the ones in this manual.*** *The charger and battery pack are specifically designed to work together.*
- ***Do not expose the charger to rain or snow.***
- ***Do not use an extension cord unless it is absolutely necessary****. Use of improper extension cord could result in risk of fire, electric shock or electrocution.*
- ***Do not place any object on top of the product or place the product on a soft surface that might block the ventilation slots and result in excessive internal heat.*** *Place the product in a position away from any heat source. The charger is ventilated through slots in the top and the bottom of the housing.*
- ***Do not disassemble the product; take it to an authorized service center when service or repair is required****. Incorrect reassembly may result in a risk of electric shock, electrocution or fire.*
- ***Disconnect the charger from the outlet before attempting any cleaning. This will reduce the risk of electric shock.*** *Removing the battery pack will not reduce this risk.*
- ***Applying un-rechargeable battery will cause machine malfunctions.***
- *If the vacuum requires cleaning, unplug the adaptor, switch off the unit and take out the battery. Do not use cleaners or solvents to clean the exterior of the vacuum. Use only a damp or dry cloth.*
- *The appliance must be disconnected from the supply mains when removing the battery.*
- *To extend the battery life, we suggest to keep the product being always charged when not in use. Recharge the vacuum as soon as possible following use; waiting several days can damage the battery.*
- *If you plan not to use the vacuum over 6 months, please fully charge the battery then turn off the power and remove the battery from the vacuum cleaner and store it separately. It's recommended to fully recharge the battery (in the vacuum cleaner) every 3 months to activate the battery capacity.*
- ***The charger is designed to operate on standard 120V household electrical power. Do not attempt to use it on any other voltage.*** *This does not apply to the vehicular charger.*

WARNING: *Shock hazard. Do not allow any liquid to get inside the charger. Electric shock may result.*

WARNING: *Burn hazard. Do not submerge the battery pack in any liquid or allow any liquid to enter the battery pack. Never attempt to open the battery pack for any reason. If the plastic housing of the battery pack breaks or cracks, return to a service center for recycling.*

Charger Cleaning Instructions

WARNING: *Shock hazard. Disconnect the charger from the AC outlet before cleaning. Dirt and grease may be removed from the exterior of the charger using a cloth or soft non-metallic brush. Do not use water or any cleaning solutions.*

Important Charging Notes

1. Longest life and best performance can be obtained if the battery pack is charged when the air temperature is between 65°F and 75°F (18° – 24°C). DO NOT charge the battery pack in an air temperature below +40°F (+4.5°C), or above +104°F (+40°C). This is important and will prevent serious damage to the battery pack.
2. Foreign materials of a conductive nature such as, but not limited to, grinding dust, metal chips, steel wool, aluminum foil, or any buildup of metallic particles should be kept away from charger cavities. Always unplug the charger from the power supply when there is no battery pack in the cavity. Unplug the charger before attempting to clean.
3. Do not freeze or immerse the charger in water or any other liquid.

Storage Recommendations

1. The best storage place is one that is cool and dry, away from direct sunlight and excess heat or cold.
2. For long storage, it is recommended to store a fully charged battery pack in a cool dry place out of the charger for optimal results.

NOTE: Battery packs should not be stored completely depleted of charge. The battery pack will need to be recharged before use.

SYMBOLS

The label on your tool may include the following symbols. The symbols and their definitions are as follows:

V ..... volts

A ..... amperes

Hz ..... hertz

W ..... watts

min ..... minutes

∿ or AC ..... alternating current

⎓ orDC ..... direct current

n_o ..... no load speed

..... Class I Construction (grounded)

..... earthing terminal

..... safety alert symbol

..... Class II Construction (double insulated)

.../min or rpm. ..... revolutions or reciprocation per minute

Wh ..... Watt Hours

SAFETY INSTRUCTIONS

WARNING:

Note: This equipment has been tested and found to comply with the limits for a Class B digital device, pursuant to Part 15 of FCC Rules.

These limits are designed to provide reasonable protection against harmful interference in a residential installation. This equipment generates, uses and can radiate radio frequency energy and, if not installed and used in accordance with the instruction, may cause harmful interference to radio communications., However, there is no guarantee that interference will not occur in a particular installation.

If this equipment does cause harmful interference to radio or television reception, which can be determined by turning the equipment of and on, the user is encouraged to try to correct the interference by one or more of the following measures:

- Reorient or relocate the receiving antenna.
- Increase the separation between the equipment and receiver.
- Connect the equipment into an outlet on a circuit diferent from that to which the receiver is connected.
- Consult the dealer or an experienced radio/TV technician for help.

Changes or modifications not expressly approved by the party responsible for compliance could void the user's authority to operate the equipment.

This device complies with part 15 of the FCC Rules. Operation is subject to the following two conditions:

(1) This device may not cause harmful interference.

(2) This device must accept any interference received, including interference that may cause undersired operation.

RF Exposure Warning:

This Wireless LAN (local area network) device has been evaluated under FCC Bulletin OET 5 and found compliant to the requirements as set forth in CFR 47 Sections 2.1091, 2.1093, and 15.247 (b) (4) addressing RF exposure from radio frequency devices. The radiated output power of this Wireless LAN device is far below the FCC radio frequency exposure limits. Nevertheless, this device should be used in such a manner that the potential for human contact (closer that 8") during normal operation is minimized. When nearby persons have to be kept to ensure RF exposure compliance, in order to comply with RF exposure limits established in the ANSI C95.1 standards, the distance between the antennas and the user should be greater than 20 cm (approx. 8"). This equipment complies with FCC RF radiation exposure limits set forth for an uncontrolled environment. This device and its antenna(s) must not be co-located or used in conjunction with any other antenna or transmitter.

CUSTOMER ASSISTANCE

Product Service & Support

For any questions about operating this new BLACK+DECKER branded product, PLEASE CONTACT US FIRST… do not return this product to the retail store. The contact information for support will vary depending on the country in which you purchased and utilize the product.

To obtain warranty service or other information for products purchased from CT Nova itself or through its authorized reseller or agent and utilized in the U.S.A., please call our consumer support line at **(855) 207-3922**. You will receive instructions on how to ship the products at your expense to an our Authorized Service Center. To obtain service, you must include: (a) a copy of your receipt, bill of sale or other comparable proof of purchase; (b) a written description of the problem; and, most importantly; (c) your address and telephone number.

For further information needed on its features, please visit **www.blackanddecker.com** for frequently asked questions and the electronic manual.

©2020 CT Nova US LLC, Chicago, IL USA.

PRODUCT VIEW

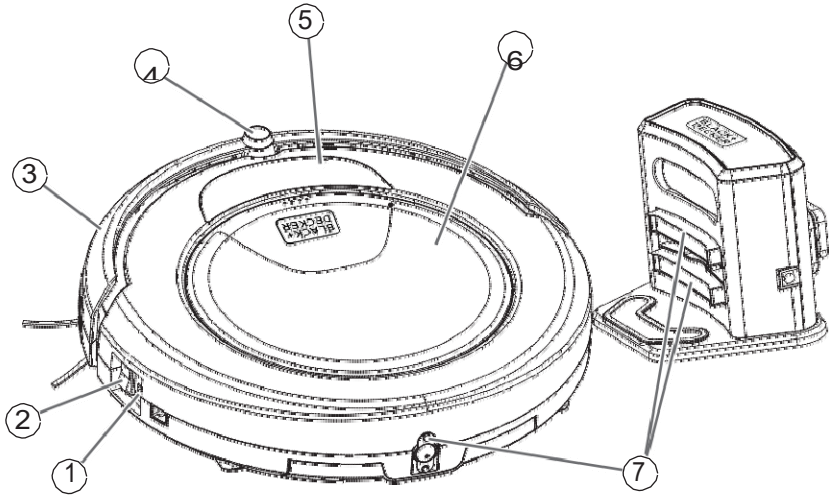

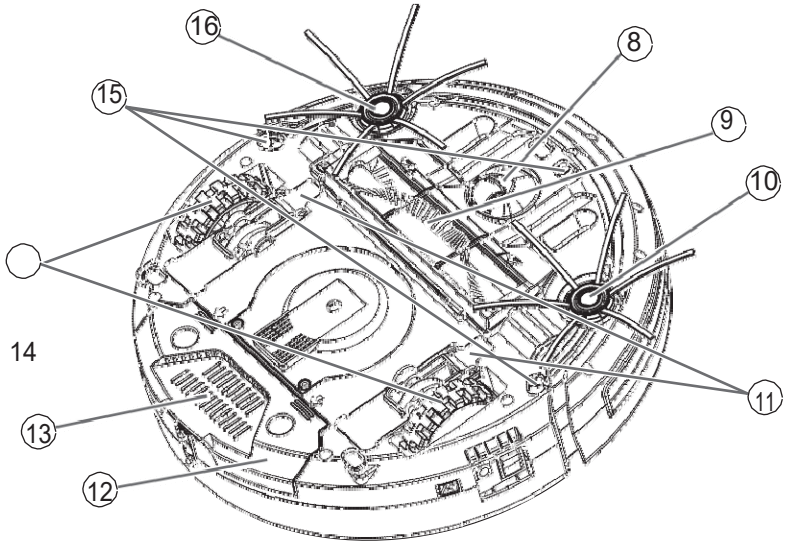

1. D.C. Jack
2. **Power** Switch
3. Bumper
4. IR Receiver (for Docking Station)
5. Control Panel and LED Display
6. Top Cover (Dust Bin in Side)
7. Contact Plates for Automatic Charging
8. Front Small Wheel
9. Intake Valve
10. Side Brush
11. Wheel Cover
12. Battery Cover
13. Heat Vent
14. Left and Right Wheels
15. Anti-Clif Sensor
16. Side Brush

CONTROL PANEL

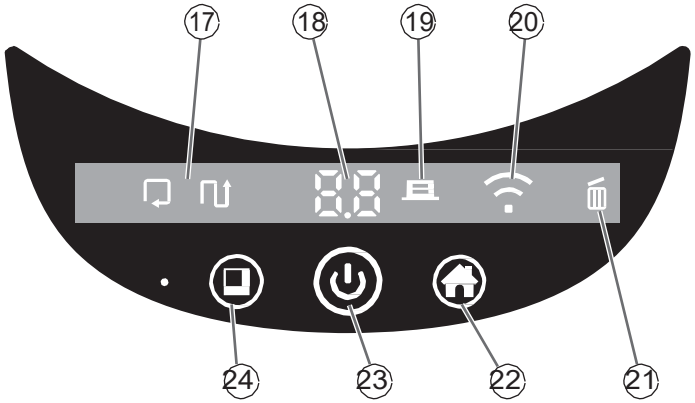

17. Clean Pattern ICON
18. Double 8 LED Display
19. Docking LED Indicator
20. Wifi Connection Status ICON
21. Dust Bin Full or Nozzle Block LED Indicator
22. **Docking** Button (**Wifi pairing** Button)
23. **Power** Button
24. **Small Area Clean** Button

MAJOR COMPONENTS AND ATTACHMENTS

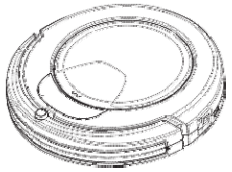

V660 Cleaner x1

Rechargeable Battery x1

Adaptor x1

Dust Bin Filter x1
(1 pc Installed in the dustbin)

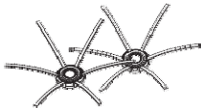

Side Brush x2

Owner's Manual x1

Docking Station x1

Brush Roll x1
(1 pc Installed in the vacuum)

Room Containment unit x1

INSTALLATION GUIDE

Installing and Removing Side Brush:

To install: Press the brush directly onto the holder.(Fig. 1)

To remove: Hold two opposite sides of the brush as shown in Fig. 2, and evenly pull upward to remove the brush.

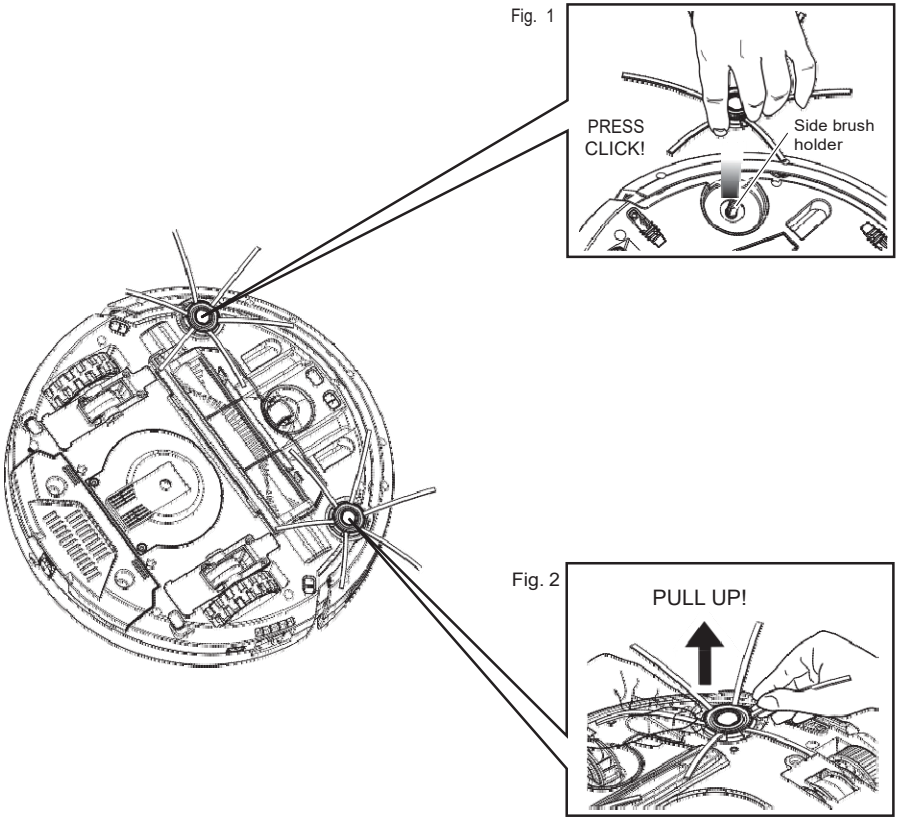

Recharging Battery:

1. Before charging, please check if the battery is properly mounted and **turn on the power switch**.
2. Two ways to charge the battery:

   A. Push the adaptor plug into d.c. jack at the side of the unit first, and then plug the a.c. end of the adaptor into the a.c. power outlet on the wall. (Please connect the adaptor to the unit first before connecting to the a.c. power outlet.)

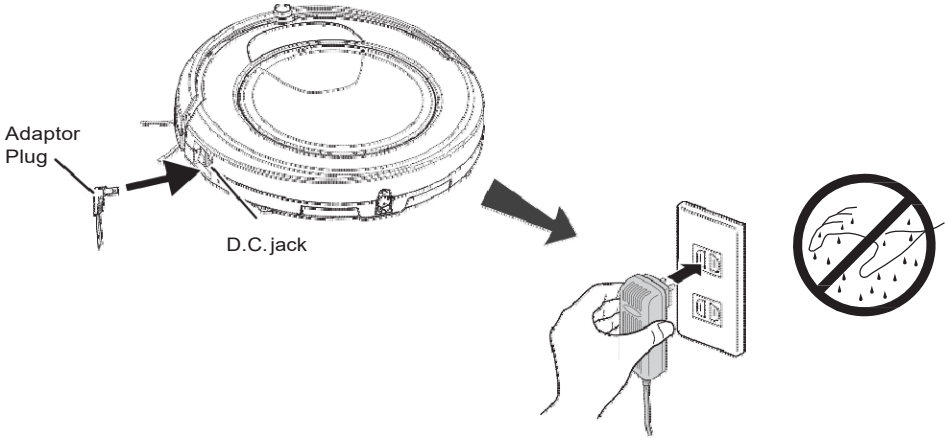

   B. Make sure the docking station is installed properly, place the unit to the docking station, make sure the contact points at the back of the unit is contacted with the contact plate at the docking station. (See dock it the page no.XX needs update proof test)

3. When charging, the LED indicator below the ⏻ " (Power) on V660 (as above diagram) will flash green, and it will stay green when the cleaner has been uninterruptedly charged for 4~6 hours.
4. To make sure the battery always at full charged status, the unit will be charged 15 min every hour after full.
5. When the V660 is in the "Battery Low" situation, " ⏻ " (Power) will stay in the RED.

INSTALLATION GUIDE

Preparation of Room Containment Unit:

1. Turn the power switch of.
2. Press two points mark A and slide the cover in the direction of arrow B as shown in the diagram below.
3. Insert four size AA batteries and match “+” and “-” to the battery compartment, then close the cover of the containment.

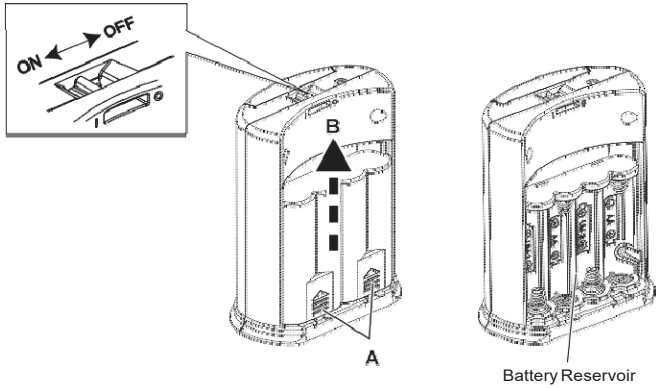

The room Containment unit of V660 may contain the cleaning area by putting it in a proper place.

For example:

To contain the Robot Cleaner cleaning area A (shaded area) and not crossing to area B by putting the Room containment in the position as shown in Fig. 3. And to contain area B (shaded area) by putting the Room Containment in the position as shown in Fig. 4.

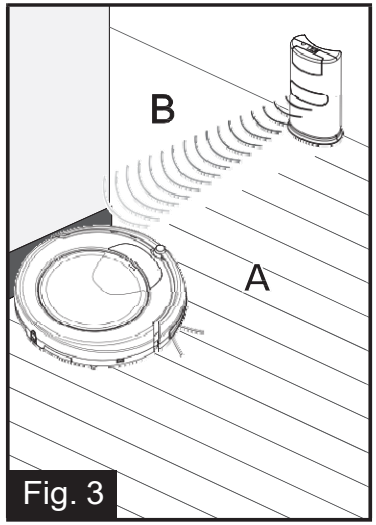

Fig. 3

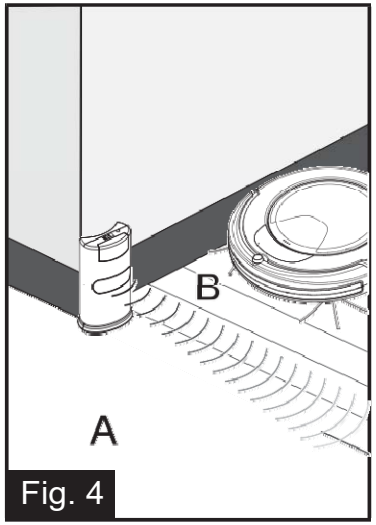

Fig. 4

Download APP:

How to Download APP:

1 . Download “Black + Decker Home” APP from the App Store or Google Play™.

2. Follow the instructions in the App to create an account and connect the vacuum cleaner to your WiFi network.

Note- Other App and device instructions are also available in the App.

SMART OPERATION

This revolution Robotic Vacuum Cleaner is equipped with functions suitable for cleaning up floor surfaces at your home and oice such as wood, tile, and linoleum.

Smart Working Patterns:

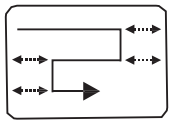
“Z” Type

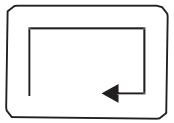
Along the wall

With Gyro and main wheel encoder sensors, V660 will build a map, so clean your rooms and go back to the dock station successfully when its power is low.

With Mobile APP, the real-time mapping can shown so you can track the vacuum's progress. The App will also function as a remote control to set schedules, change modes and switch on the vacuum from anywhere.

Scheduling setting from APP:

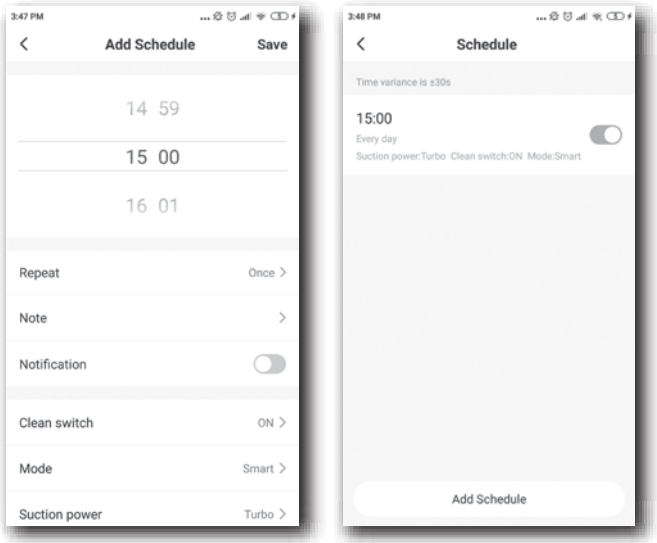

※The vacuum cleaner can function normally no matter Wi-Fi is connected or not.

OPERATION

Preparation for Operation:

1. Turn on the power switch on the side of the unit, and charge the battery for 4~6 hours prior to the first operation.

Proof Test:

Please try to test the installation of docking station, if the vacuum cannot go back to the docking station and charge successfully, then please replace the docking station to the proper location.

Proof test, turn on the power switch of the unit, Use ( ) on APP or press robotic control panel icon to control the robot go back to the docking station for recharging. please refer to below picture. (see page 12 Download APP)

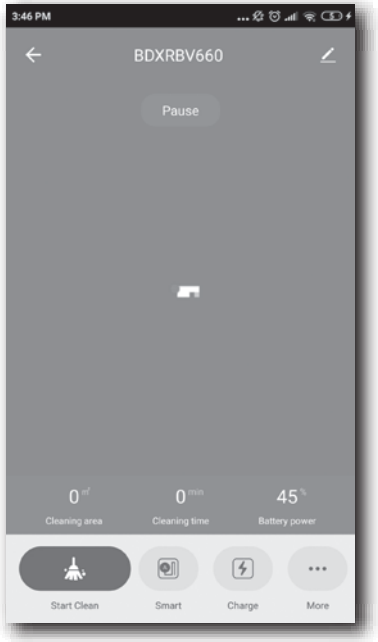

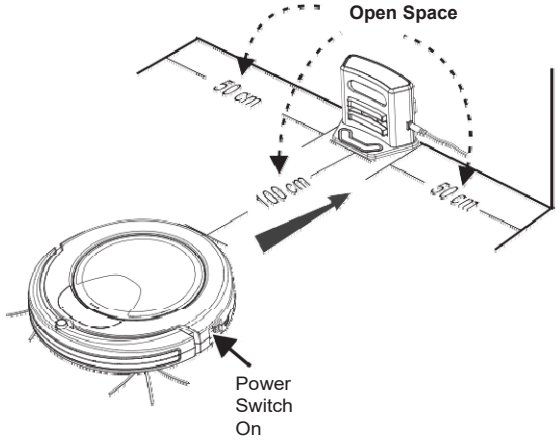

Manual Operation

1. Operation without connecting to the docking station:

   Place the cleaner on the floor and turn on the power switch then press the operation button to operate, press again to stop.
2. When battery low, the unit is programmed to find the docking station automatically for recharge. If the unit fails to return to the docking station, user can put it back connecting to the docking station manually.
3. Press " " on APP or press robotic control panel power button to start clean.

※***When LED indicator lights on.***

→ ***Check:***

1. Dust bin is full.

2. Intake Valve is stuck with dirt.

3. Wipe out the inner and outside of Intake Valve area.

1. Turn ON the power switch, wait for power LED light on (green).
2. Press power key.
3. After work is completed, the unit will emit a buzz of warning. The unit will stop or go back to docking station for charging depends on the settings.
4. During the working time :
   (1) The unit will stop if the power key pressed at the control panel or the stop key is pressed on the APP.
   (2) If low power, the unit will Beep one time and Power LED will show RED on. The unit will go back to docking station for charging.
5. When the unit is at docking station or pluged into adaptor:
   (1) Charging : The power LED will show green flashing.
   Full charged : The power LED will show green on.
   (2) At dock station:
   - Press ( ) power key or press Start Clean on the mobile APP to let the unit start to work.
   - The unit will try to re-find the dock station again if it is accidentally moved, but the unit will stop if the docking station can't be found in the near area.

Stop operation

1. To stop the operation of the unit immediately, you can turn of the power switch on the right of the unit, or press unit control panel power button, or lift the unit of the floor (the unit will stop 1 second later).
2. If you want the unit to continue working, place the unit on the floor and reset the power switch of the cleaner.

Shut Off

1. The unit will stop after 1 second lifted up from the floor.
2. The unit will stop when wheel jammed for more than 6~10 seconds.

Sleep Mode

If the unit stops and no key is pressed in 3 minutes, the unit will go into sleep mode. Any key pressed will wake up the unit.

Table A: Error code on LED Display (Power LED flash Red)

Display on screen	Possible cause	Solution
E1	The wheels are stuck.	Remove the vacuum from obstacles, and re-start the power switch.
E2	The top cover or dust bin is not installed properly.	Install the top cover and dust bin properly. The unit will detect the error and fix automatically.
E3	The bumper is stuck.	Remove the vacuum from obstacles. The unit will detect the error and fix automatically.
E4	The unit is lifted up from the floor.	Put the vacuum back on the floor.
E5	The unit is stuck on the clif or stair.	Remove the vacuum from dark floor surface.
E6	The battery is not installed properly. Charging error. (Power switch is of)	To install the battery properly, please refer to page 22 for battery installation, and re-start the power switch.
E7	The main brush is stuck.	Remove the vacuum from obstacles, or reinstall main brush and re-start the power switch.

Table B: Beep Indicator

Beep	Represent
Beep 1 time	Normal
Beep 2 time	Invalid
Beep 3 time	Error

CLEANING AND MAINTENANCE

⚠ *WARNING: Turn off vacuum cleaner before performing maintenance to the vacuum cleaner.*

Do NOT clean the vacuum cleaner, components or accessories using petroleum or any other flammable liquid or solvents, etc.

Clean only the outside of the vacuum cleaner.

Use only a moist cloth and mild detergent for cleaning the vacuum cleaner, components and accessories.

After cleaning, wipe of the moisture on vacuum cleaner, components and accessories with a dry cloth.

DO NOT place accessories, tools or components in a dishwasher.

Maintenance Method:

The operation and maintenance of the vacuum is very simple. After each use, clean any dirt left behind on the dust bin and filter. It is not necessary to clean the intake after every use.

Cleaning Dust Bin:

1. Press and lift the cover from “A” position to open the top cover of the cleaner.

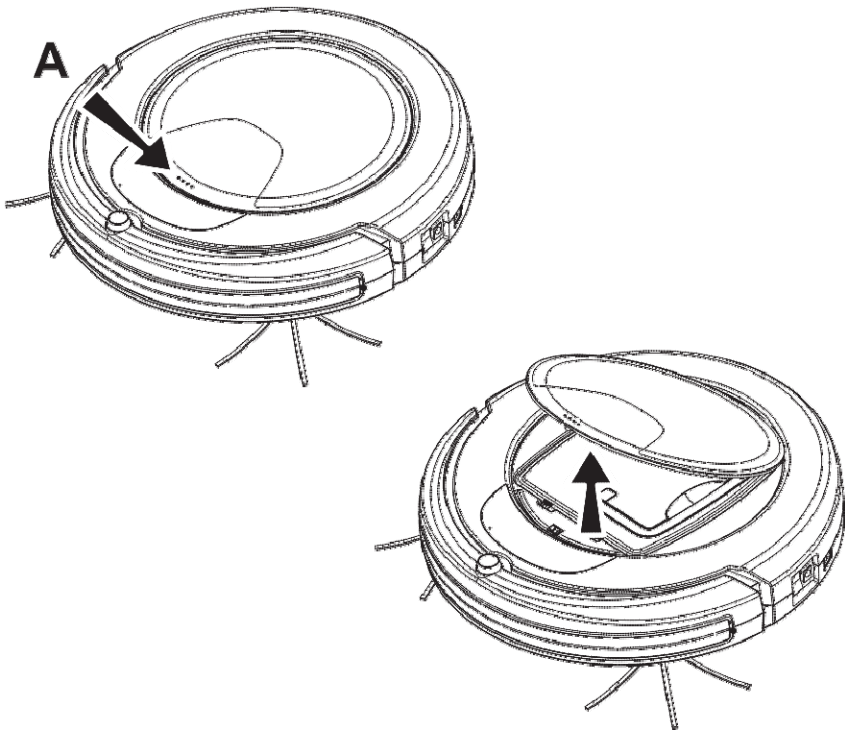

2. Pull up the grip and take out the dust bin from the cleaner.

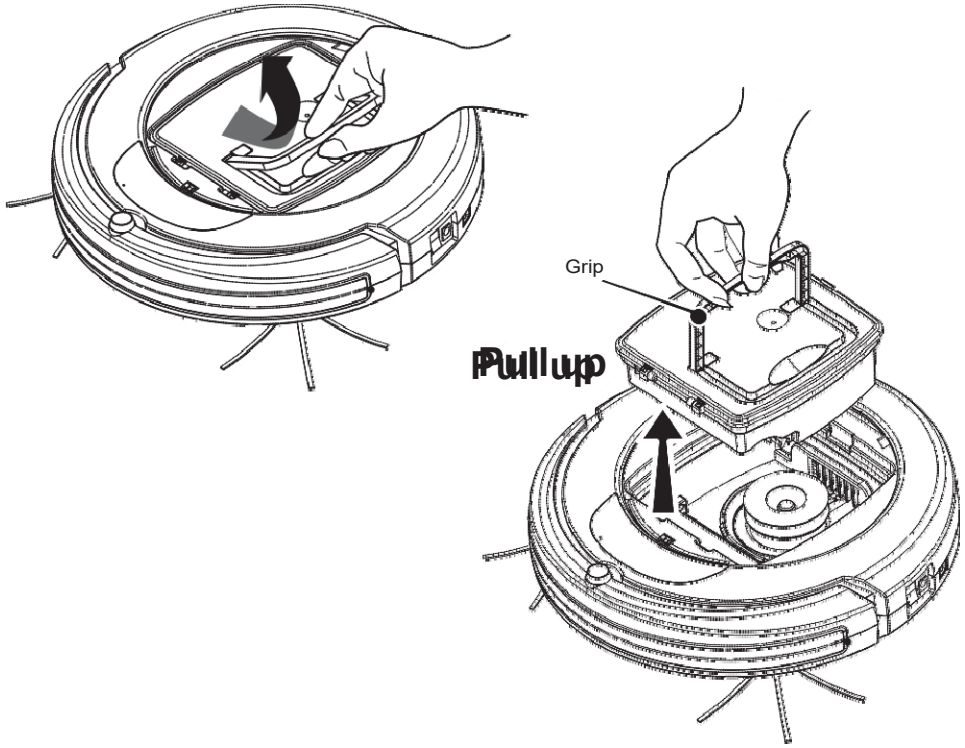

3. Open the upper cover of the dust bin.

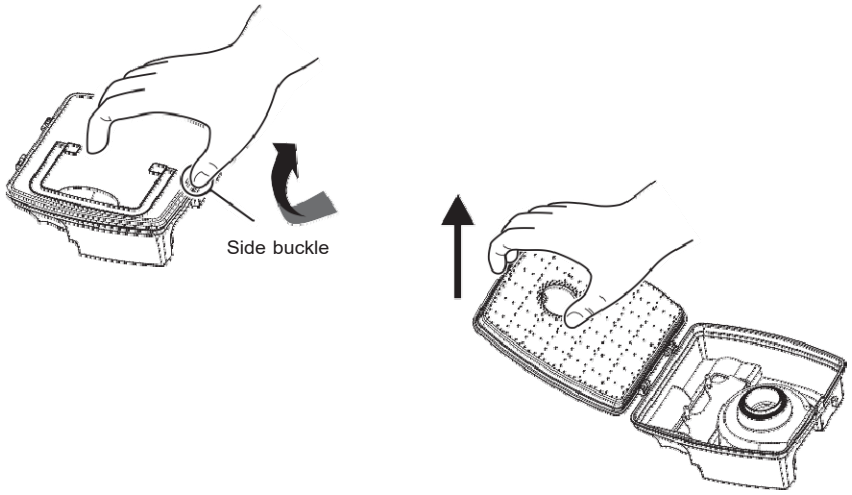

4. Lift up and take out the filter.

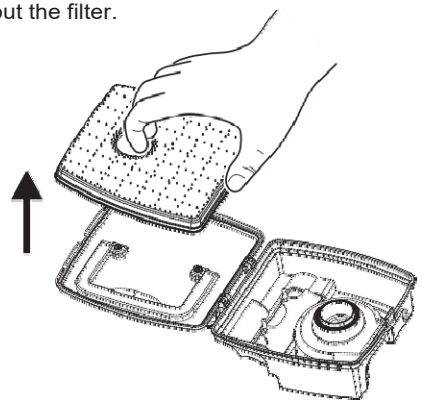

5. Throw away the dust and dirt from the dust bin.

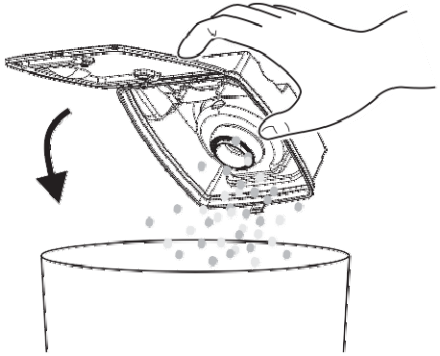

6. Rinse the dust bin with tap water and drain completely. It is not necessary to wash every time. Please do not put it into the dish washer or washing machine.

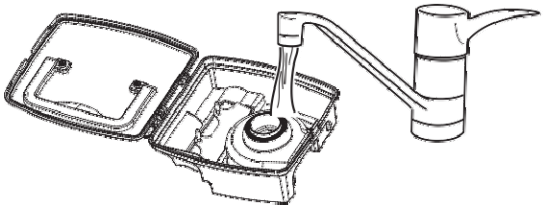

7. Periodically clean the filter with a soft bristle brush.

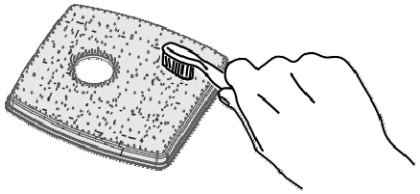

8. Once dry, reinstall the filter and close the dust bin lid.

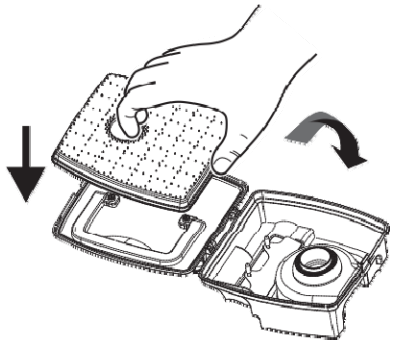

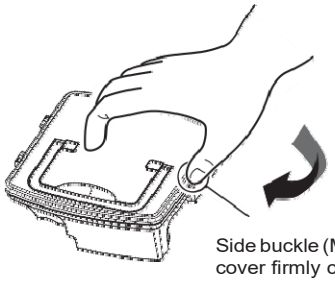

Side buckle (Make sure the cover firmly closed)

9. Place dust bin and top cover back in the unit.

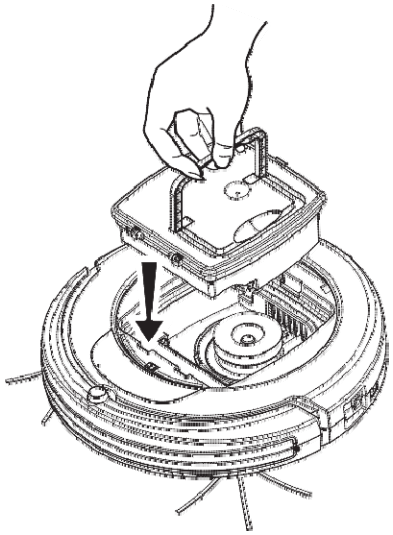

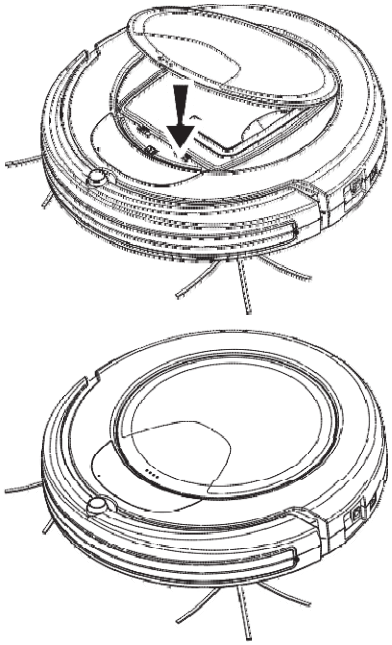

ATTENTION!!

Before starting the unit, please be sure the dust bin filter has been properly installed to avoid damage.

Replacing the filters

The filters should be replaced every 6 to 9 months and whenever worn or damaged. Replacement filters are available from your BLACK+DECKER dealer.

Visit **www.blackanddecker.com** to locate dealers.

- Remove the old filters as described in point 8.
- Fit the new filters as described in point 8.

Cleaning Side Brushes:

1. After being used for a period of time, the brushes need to be replaced for working more efectively.
2. Turn of the power, place bottom of the cleaner upward on a flat surface. Hold two opposite sides of the brush (see diagram below), and evenly pull upward to remove the brush.
3. The side brushes can be rinsed if they become crooked, you can soak them in hot water to make them recover to the original shape. Install the brushes back after cleaning.

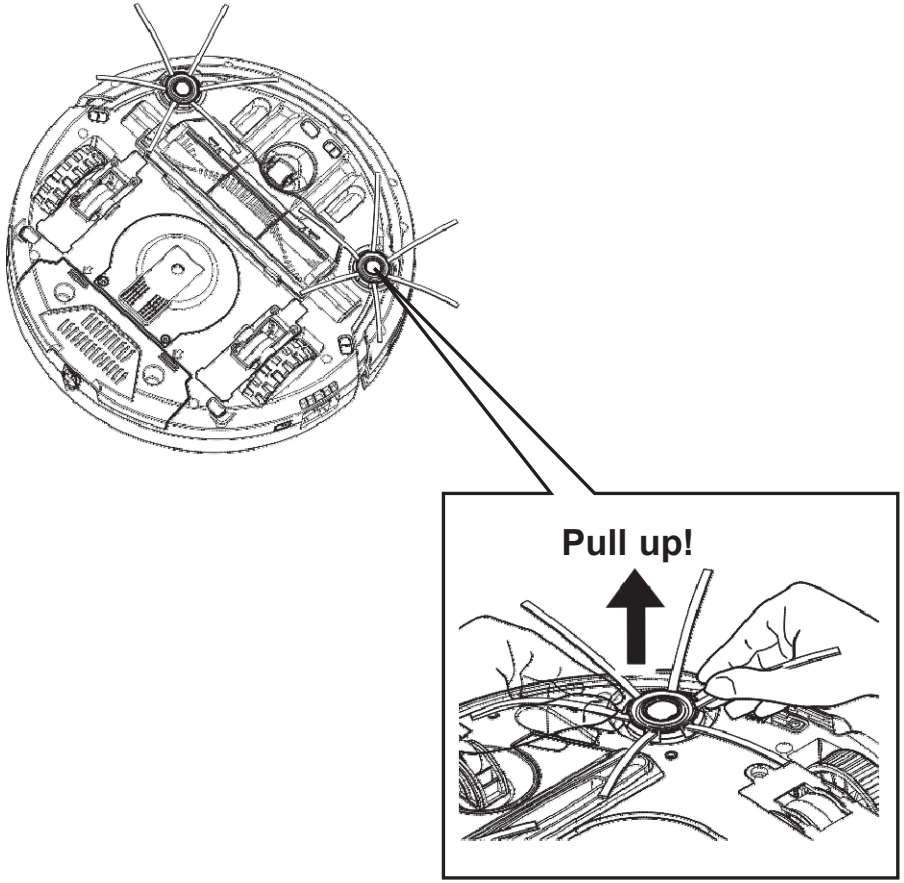

Cleaning Intake:

After repeated use, dirt and dust can accumulate around the intake of the V660 and the eiciency can be reduced. To ensure the best eiciency and constant airflow, the intake should be cleaned periodically.

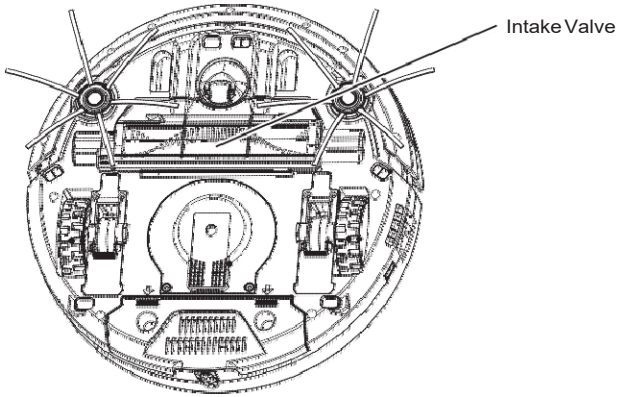

Cleaning Brush Roll:

After repeated use, dirt, hair and dust can accumulate around the intake and Brush Roll of the vacuum. To ensure the best eiciency and constant airflow, the Brush Roll should be cleaned periodically.

1. After being used for a period of time, the Brush Roll might need to be replaced.
2. Turn of the power, place bottom of the cleaner upward on a flat surface. Hold removable intake and pull upward, then pull upward the Brush Roll and clean with a soft bristle brush (see diagram below). Rinse it with tap water. It is not necessary to wash every time.

   Please do not put it into the dish washer or washing machine.

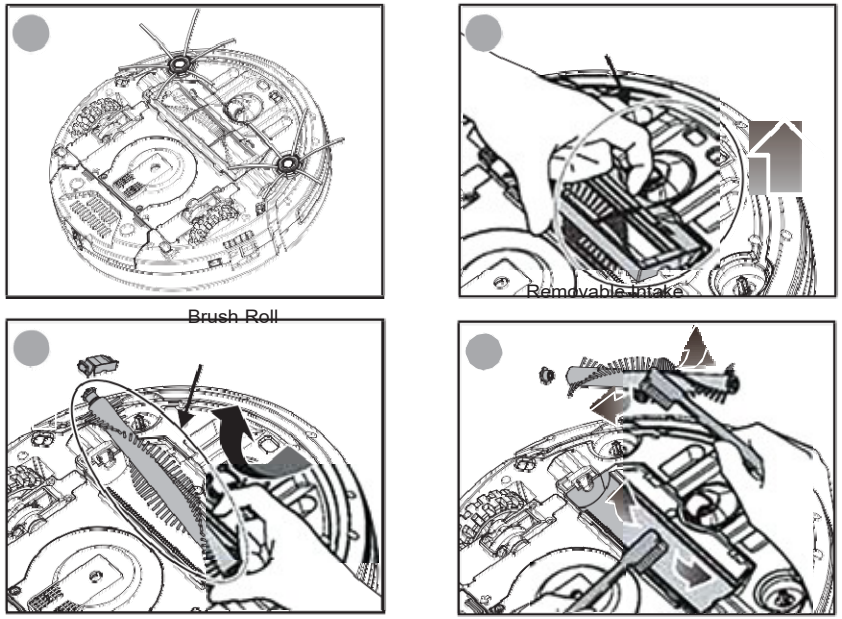

Maintenance of Main Wheels:

Follow below Instruction if Cable is twined or strangled or Clean needed.

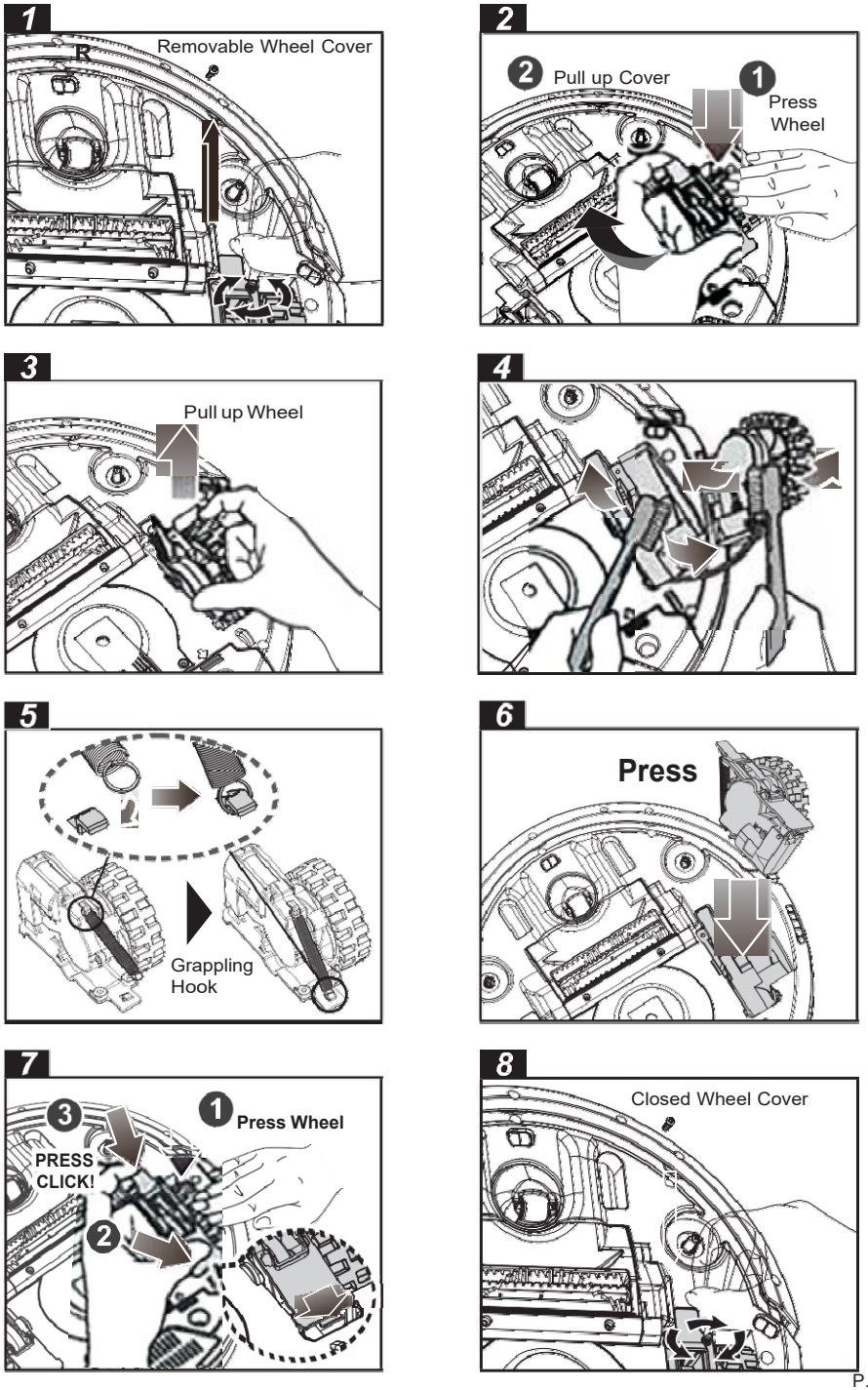

Battery Installation and Removal:

1. Turn of the power switch before installing the battery.
2. **Removing the battery:** To open the battery cover first by pressing the two points “A” (marked in the below diagram) and slide the battery cover in the direction of arrow “B” (marked in the below diagram). Then push the battery toward the springs’ side in order to take out the battery easily.
3. **Replacing the battery:** To install the new battery in the battery compartment with correct polarity + and - sign which marked on the battery compartment. Put to battery connecting dots side down close to the springs mounted on the battery compartment, then push toward springs for easier inserting the battery. Be sure to orient the battery contacts with those of the unit. Slide back the battery cover to close it.

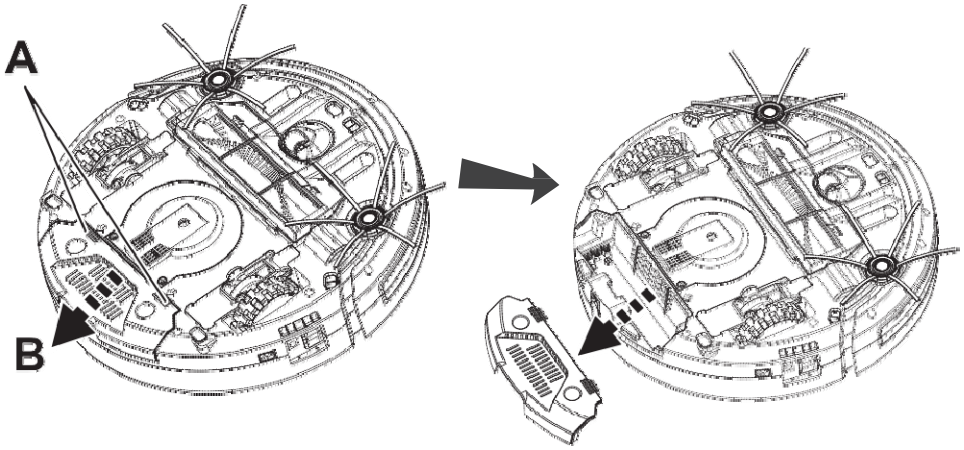

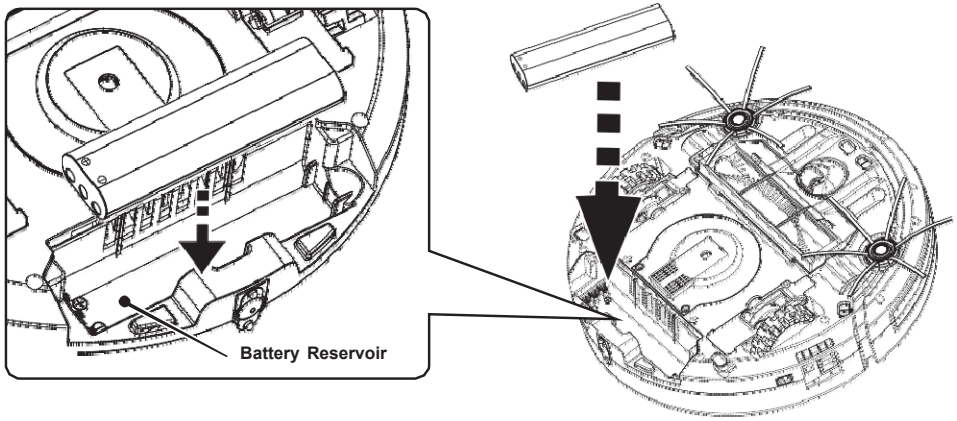

WARNING: *Make sure the vacuum is completely dry before using it.*

REPLACEMENT PARTS

Item		Name	Part No.
1		Rechargeable Battery	V660-REBY
2		Adaptor	V660-ACAD
3		Dust Bin Filter	V660-DBFR
4	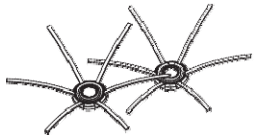	Side Brush	V660-SBH2
5	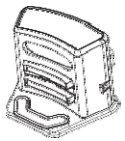	Docking Station	V660-DSTN
6		Brush Roll	V660-BRRL
7		Room Containment unit	V660-RMCM

ACCESSORIES

Recommended accessories for use with your appliance are available from your local dealer or authorized service center.

If you need assistance regarding accessories, please call: **1-855-207-3922** or visit **www.blackanddecker.com**

⚠ *WARNING: The use of any accessory not recommended for use with this appliance could be hazardous.*

REPAIRS

The charger and battery pack are not serviceable.

⚠ *WARNING: To assure product SAFETY and RELIABILITY, repairs, maintenance and adjustment (including brush inspection and replacement, when applicable) should be performed by a BLACK+DECKER factory service center or a BLACK+DECKER authorized service center. Always use identical replacement parts.*

SERVICE INFORMATION

All BLACK+DECKER Service Centers are stafed with trained personnel to provide customers with eicient and reliable power tool service. Whether you need technical advice, repair, or genuine factory replacement parts, contact the BLACK+DECKER location nearest you. To find your local service location, call: **1-855-207-3922** or visit **www.blackanddecker.com**

WARRANTY & TRADEMARK ACKNOWLEDGMENT

Three-Year Limited Warranty

BLACK+DECKER warrants to the original consumer purchaser only that this product and the component parts thereof, will be free from defects in workmanship and materials. BLACK+DECKER will, repair or replace, at its sole option and discretion, this product or any defective parts. BLACK+DECKER' liability hereunder shall be limited to repair or replacement of the defective part or parts, and such correction shall constitute a fulfillment of all of BLACK+DECKER' warranties hereunder.

This limited 3-year warranty is only valid for the original consumer purchaser in limited jurisdictions and is not transferrable. This limited 3-year warranty will automatically terminate if this product is sold or otherwise transferred to another party. The product must be purchased from BLACK+DECKER or an authorized dealer or the warranty is void. This limited 3-year warranty is valid only for products purchased and utilized in specific jurisdictions. Please visit our website at **www.blackanddecker.com** for a list of jurisdictions wherein this 3-year limited warranty is valid.

This limited 3-year warranty does not apply to accessories and consumables and does not cover damage due to misuse, abuse, negligence, acts of God, accident, commercial use or modification of, or to any part of this product. This warranty does not cover damage due to improper operation, maintenance or installation; ordinary wear and tear; or attempted alterations or repairs by anyone other than BLACK+DECKER or someone authorized by BLACK+DECKER to do warranty work. Any unauthorized alterations or repairs will void this warranty. This limited 3-year warranty does not cover product sold AS IS or WITH ALL FAULTS. This limited 3-year warranty is invalid if the factory applied serial number or date stamp has been altered, defaced or removed from this product. This limited 3-year warranty does not cover product purchased or utilized in a jurisdiction not covered.

The procedure for obtaining service and support, and the applicability of this warranty, will vary depending on the country or jurisdiction in which you purchase and utilize the product. For details on obtaining product service, support and other warranty information please visit **www.blackanddecker.com**.

This warranty gives you specific legal rights, and you may also have other rights which vary from state to state and country to country.

EXCEPT AS EXPRESSLY SET FORTH IN THIS WARRANTY, BLACK+DECKER MAKES NO OTHER WARRANTIES, EXPRESSED OR IMPLIED, INCLUDING ANY IMPLIED WARRANTIES OF MERCHANTABILITY AND FITNESS FOR A PARTICULAR PURPOSE. BLACK+DECKER EXPRESSLY DISCLAIMS ALL WARRANTIES NOT STATED IN THIS LIMITED WARRANTY. ANY IMPLIED WARRANTIES THAT MAY BE IMPOSED BY LAW ARE LIMITED TO THE TERMS OF THIS EXPRESSED WARRANTY.

LIMITATION OF REMEDIES AND DAMAGES. REPAIR OR REPLACEMENT AS PROVIDED UNDER THIS WARRANTY IS THE EXCLUSIVE REMEDY OF THE CONSUMER. BLACK+DECKER SHALL NOT BE LIABLE FOR ANY INCIDENTAL OR CONSEQUENTIAL DAMAGES, INCLUDING BUT NOT LIMITED TO ATTORNEYS' FEES AND/OR COSTS OF LITIGATION, FOR BREACH OF ANY EXPRESS OR IMPLIED WARRANTY ON THIS PRODUCT. BLACK+DECKER IS NOT LIABLE FOR ANY DAMAGES CAUSED BY THE PRODUCT OR BY THE PRODUCT TO PERFORM, INCLUDING ANY LOST PROFITS, LOST SAVINGS, INCIDENTAL DAMAGES, OR CONSEQUENTIAL DAMAGES. BLACK+DECKER IS NOT LIABLE FOR ANY CLAIM MADE BY A THIRD PARTY OR MADE BY YOU FOR A THIRD PARTY. THIS LIMITATION APPLIES WHETHER DAMAGES ARE SOUGHT, OR A CLAIM MADE, UNDER THIS WARRANTY OR AS A TORT CLAIM (INCLUDING NEGLIGENCE OR STRICT PRODUCT LIABILITY), A CONTRACT CLAIM, OR ANY OTHER CLAIM. THIS LIMITATION CANNOT BE WAIVED OR AMENDED BY ANY PERSON. THIS LIMITATION OF LIABILITY WILL BE EFFECTIVE EVEN IF BLACK+DECKER OR AN AUTHORIZED REPRESENTATIVE OF BLACK+DECKER HAS BEEN ADVISED BY YOU OF THE POSSIBILITY OF ANY SUCH DAMAGES.

Some states and countries do not allow limitations on how long an implied warranty lasts and do not allow the exclusion or limitation of incidental or consequential damages, so the above limitations may not apply to you. This warranty gives you specific legal rights, and you may also have other rights which vary from state to state and country to country.

Provided that the product was purchased from BLACK+DECKER itself or through its authorized reseller or agent and utilized in the U.S.A., BLACK+DECKER will, without charge, repair or replace, at its option, defective products, products or component parts upon delivery to the authorized BLACK+DECKER Authorized Service Center, accompanied by proof of the date of first customer purchase, such as a duplicated copy of a sales receipt.

You must pay any initial shipping charges required to ship the product for warranty service, but the return charges, to an address in the U.S.A, will be at BLACK+DECKER' expense, if the product is under warranty.

For Products Purchased Outside the U.S.A.

Please contact your authorized local reseller or agent for warranty information.

Trademark Acknowledgment

BLACK+DECKER® and the BLACK+DECKER Logo are trademarks of the BLACK+DECKER Industrial Tool Co., or an ailiate thereof and are used under license.
The color scheme is a trademark for BLACK+DECKER power tools & accessories.

© 2020 BLACK+DECKER

U.S. & Canada Only

Made in CHINA

Product Manufactured by:
CT Nova US LLC, Chicago, IL USA.

For product, service or warranty information contact us at:
www.blackanddecker.com
1-855-207-3922.

TROUBLESHOOTING

	Problem	Possible Cause	Solution
1	Turn on the power switch with no LED display shown	1. Battery is not installed correctly. 2. Very low battery.	1. Install the battery according to themanual. 2. Charge the battery according to the manual.
2	Vacuum on but can not collect dirt or hair.	1. The dustbin is full. 2. The filter is not installed correctly.	1. Clean the dustbin. 2. Re-install the filter correctly.
3	The side brush becomes crooked,	Being used for a long time.	If it becomes crooked, you could soak it in hot water to have it recover to its original shape.
4	Unit circles around only.	One of the wires of the wheels is loosened.	Open the wheel cover and connect the loosened wire of the wheel set properly or contact your local dealer for service.
5	Cannot start the unit.	1. The battery is not installed properly. 2. Battery power is low. 3. The dust bin is not installed properly.	1. To install the battery properly, please refer to page 22 for battery installation. 2. Have the battery fully charged. 3. Place back the dust bin and turn the vacuum on again.
6	Unit could not vacuum efectively when it is turned on.	The dust bin filter is not properly installed.	Install the dust bin filter properly.
7	The LED display shows error	E1, E2, E3, E4, E5, E6, E7 and Beep 3 times.	Please refer to table A on page 15 for solving the problems.

For assistance with your product, visit our website **www.blackanddecker.com** for the location of the service center nearest you or call the BLACK+DECKER help line at **1-855-207-3922.**

DISPOSING OF APPLIANCE AND BATTERY PACK

Do not dispose of the appliance or its battery pack via household trash!

Take the appliance and the removed battery pack to the appropriate recycling points for separate disposal.

Thank you for choosing BLACK+DECKER!

If you have a question or experience a problem with your BLACK+DECKER purchase, go to: http://www.blackanddecker.com/instantanswers If you can't find the answer or do not have access to the Internet, call 1-855-207-3922 from 8 a.m. to 5 p.m. EST Mon. – Fri. to speak with an agent. Please have the CATALOG NUMBER available when you call.

To register your new product, visit www.BlackandDecker.com/NewOwner