10.1" Embedded Touch PC

FT101V40CAPOB

Project USA

Yes ☑
No ☐
Supports Clamps

CLEAR BOND
Optically Bonded

- **Allwinner® V40 Cortex™ A7 QuadCore Processor**
- **2GB RAM Memory & 8GB FLASH Storage**
- **Pre-installed Android 6 operating system**
- **Anti-glare surface treatment (chemical etching)**
- **10-Finger-Multi Touch Capacitive Touch Panel**
- **1.1mm cover glass with 7H surface hardness**
- **Optically bonded Touch Panel to LCD Panel**
- **Patented IP65 front with silicon seal**
- **Integrated W-LAN module**
- **2 year guarantee (24/7 operation)**

- ***Optional: integrated GPS, Bluetooth, POE module***

faytech's Embedded Touch PCs have a pre-installed Android 6 operating system and are equipped with W-LAN module. The device has an IP65 water- and dust proof front panel with capacitive 10-finger multitouch. All the PCs have VESA 75 or VESA 100 screw patterns on the back, while the 13.3" to 27" come with their own desktop stand included.

The Embedded PCs are build for 24/7 operation and powered by the powerful V40 QuadCore mainboard, with 2G DDR3 RAM, 8GB flash memory, a SATA connector and SD card slot for further storage expansion.

This device has an optically bonded touch panel, which will improve the stability, reduce the reflection, increase the viewing angle, and enhance the perceived brightness. It also provides resistance to dust particles and shows a better image in general.

It is the perfect choice for a wide variety of applications, including industrial automation, control panels and digital signage.

Note:

This device is easy to use. A power adapter has been equipped in the package, use this adapter to power on unit. This units has below interfaces: USB\SD card\network\HDMI\OTG etc, with according cable you can easily use them.

ANDROID

W-LAN

USB UNIVERSAL SERIAL BUS

+60°C
-10°C

24/7

Product name				10.1" Embedded Touch PC			
Model number / EAN number				FT101V40CAPOB / 6920734010820			
Global Article Code	European Article Code	Release date (D/M/Y)	Version	Global Article Code	European Article Code	Release date (D/M/Y)	Version
3030506027		26/10/2020					

IP Rating
IP65 Front / IP40 Back

LCD Panel	
Screen diagonal (Inch/cm)	10.1/25.65
Display active screen size (cm)	21.70×13.60
Aspect ratio	16:10
Physical resolution	1280×800
External Maximum showable resolution - HDMI	1920×1080
Colours displayed	16.7M
Brightness (cd/m²)	350
Contrast	700:1
Typical reaction time Tr/ Tf (ms)	10/15
Visual Angle horizontal/vertical (°)	170/170
Backlight / Backlight Lifetime (hours)	LED / 20,000

Operation / Mechanical	
Operating Temperature (°C)	-10 ~ +60
Humidity Range (RH)	10% - 90%
Net weight (kg)	2.10
Gross weight (kg)	2.90 (incl. cartonage)
Housing material	Rubber Frame, Plastic Back Case
Housing (mm) L × W × H	278.0 × 203.6 × 33.3
Cut-out for clamp supports (mm) L × H	264.0 × 180.0
Max. wall thickness for clamp supports (mm)	5.0
Amount of clamps required	4
Mounting	VESA 100

Included in the Delivery
Power Supply (see Power section)
W-LAN Antenna (RP-SMA female)
Short Installation Manual
Standard Stand

Expansion slots
MiniPCIe

PC System	
CPU	Allwinner® V40 QuadCore
Chipset	Cortex A7
Graphic GPU	ARM® Mali400 Mp2 Complies with OpenGL ES 2.0/1.1
Audio	Integrated HI-FI 100dB Audio Codec Dual analog mic, 2x6W amplifier
Memory	2GB DDR3
Storage	8GB EMMC Flash
Network	10/100Mbit Network; W-LAN
OS	Android 10.0

Touch Panel	
Touch Technology	Projected Capacitive 10-Point Multitouch
Touch Connector	USB
Touch Life (Contacts)	Unlimited
Surface Hardness	7H
Surface Treatment	Anti-glare (chemical etching)
Glass Strengthening	Chemically Strengthened

Power	
Power Indicator	Green LED
Power Supply	100-240V ACDC active switching; 12V DC-Out
Working Power (V)	8~18
Power Consumption (W)	11
Stand-By Consumption (W)	<1

Internal Connectors	
1x SD-card	
2x Serial	4x TTL UART
2x USB 2.0	18/24Bit LVDS
6x GPIO	1x SATA-Port
1x Line-In	1x Line-Out
1x RTC	1x CAN Bus
1x Amplifier for 2x6W loudspeaker	

External Connectors	
1x 8-18V DC-In (screwable)	
1x 10/100Mbit RJ45 Port	
1x W-LAN antenna connector (RP-SMA male)	
1x RJ10 (4P4C)	
2x USB 2.0	1x USB OTG
1x Audio-In	1x Audio-Out
1x HDMI	1x Serial
1x SIM-card slot	1x SD-card slot

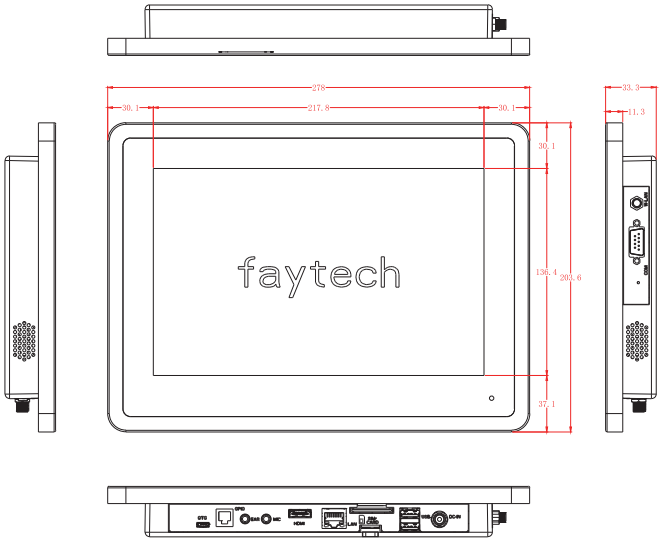

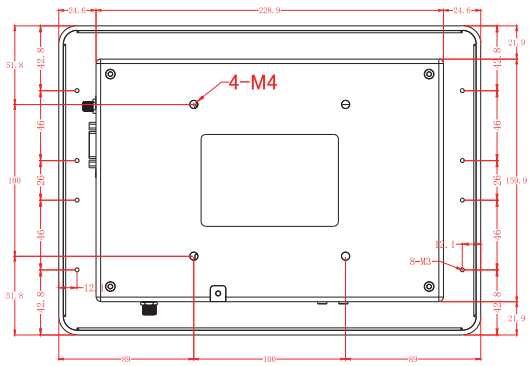

Tolerance: ± 1mm

Errata and technical modifications reserved

Corporate Headquarters

faytech AG
Bischhäuser Aue 10
37213 Witzenhausen
Germany

support@faytech.com
contact@faytech.com
www.faytech.com

China: +86 755 8958 0612
Germany: +49 5542 30374 10
USA: +1 646 843 0877
India: +91 11 49707436
Japan: +81 366 722 920

This device complies with part 15 of the FCC Rules. Operation is subject to the condition that this device does not cause harmful interference (1) this device may not cause harmful interference, and (2) this device must accept any interference received, including interference that may cause undesired operation.
Changes or modifications not expressly approved by the party responsible for compliance
could void the user's authority to operate the equipment.
NOTE: This equipment has been tested and found to comply with the limits for a Class B digital device, pursuant to Part 15 of the FCC Rules. These limits are designed to provide reasonable protection against harmful interference in a residential installation. This equipment generates, uses and can radiate radio frequency energy and, if not installed and used in accordance with the instructions, may cause harmful interference to radio communications. However, there is no guarantee that interference will not occur in a particular installation.
If this equipment does cause harmful interference to radio or television reception,
which can be determined by turning the equipment off and on, the user is encouraged to try to correct the interference by one or more of the following measures:
-- Reorient or relocate the receiving antenna.
-- Increase the separation between the equipment and receiver.
-- Connect the equipment into an outlet on a circuit different
from that to which the receiver is connected.
-- Consult the dealer or an experienced radio/TV technician for help.
To maintain compliance with FCC' s RF Exposure guidelines, This equipment should be installed and operated with minimum distance between 20cm the radiator your body: Use only the supplied antenna.