CTC Laboratories, Inc.

1-2/F., Building 2, Jiaquan Building, Guanlan High-Tech Park, Shenzhen, Guangdong, China
Tel: +86-755- 27521059 Fax: +86-755- 27521011 Http://www.sz-ctc.org.cn

TEST REPORT

Report No. .....:	**CTC20200930E03**
FCC ID……..…..:	**2AWNTABR06636A**
Applicant .....:	**SHENZHEN ABREE COMMUNICATION TECHNOLOGY CO., LTD**
Address……..…..….:	Flr.3, Bld. No.50, Second Industrial Zone, Xitian Community, Guangming New Dist., Shenzhen, China
Manufacturer.....:	SHENZHEN ABREE COMMUNICATION TECHNOLOGY CO., LTD
Address.....:	Flr.3, Bld. No.50, Second Industrial Zone, Xitian Community, Guangming New Dist., Shenzhen, China
Product Name .....:	**Multi-functional face identification door control system**
Trade Mark .....:	N/A
Model/Type reference.....:	ABR06636A
Listed Model(s) .....:	ABR06636B, ABR06636C, ABR06636D, ABR06636E, ABR06636F
Standard .....:	**FCC CFR Title 47 Part 15 Subpart C Section 15.225**
Date of receipt of test sample……:	Jun. 05, 2020
Date of testing……..:	Jun. 06, 2020 to Jun. 15, 2020
Date of issue……....:	Jun. 16, 2020
Result……..:	**PASS**

Compiled by: (Printed name + signature)	Terry Su	Terry Su
Supervised by: (Printed name + signature)	Miller Ma	Miller Ma
Approved by: (Printed name + signature)	Walter Chen	Walter Chen

Testing Laboratory Name..... :	**CTC Laboratories, Inc.**
Address..... :	1-2/F., Building 2, Jiaquan Building, Guanlan High-Tech Park, Shenzhen, Guangdong, China

This test report may be duplicated completely for legal use with the approval of the applicant. It should not be reproduced except in full, without the written approval of our laboratory. The client should not use it to claim product endorsement by CTC. The test results in the report only apply to the tested sample. The test report shall be invalid without all the signatures of testing engineers, reviewer and approver. Any objections must be raised to CTC within 15 days since the date when the report is received. It will not be taken into consideration beyond this limit. The test report merely correspond to the test sample.

Table of Contents Page

1. TEST SUMMARY 3

1.1. TEST STANDARDS 3
1.2. REPORT VERSION 3
1.3. TEST DESCRIPTION 4
1.4. TEST FACILITY 5
1.5. MEASUREMENT UNCERTAINTY 5
1.6. ENVIRONMENTAL CONDITIONS 6
1.7. EUT OPERATION STATE 6

1. GENERAL INFORMATION 7

1.1. CLIENT INFORMATION 7
1.2. GENERAL DESCRIPTION OF EUT 7
1.3. ACCESSORY EQUIPMENT INFORMATION 7
1.4. MEASUREMENT INSTRUMENTS LIST 8

2. TEST ITEM AND RESULTS 10

2.1. CONDUCTED EMISSION 10
2.2. RADIATED EMISSION 13
2.3. OCCUPIED BANDWIDTH 20 DB BANDWIDTH 21
2.4. FIELD STRENGTH OF THE FUNDAMENTAL 23
2.5. FREQUENCY STABILITY 26
2.6. ANTENNA REQUIREMENT 28

1. TEST SUMMARY

1.1. Test Standards

The tests were performed according to following standards:

FCC Rules Part 15.225: Operation within the band 13.110-14.010 MHz.
ANSI C63.10-2013: American National Standard for Testing Unlicensed Wireless Devices.

1.2. Report version

Revised No.	Date of issue	Description
01	Jun. 16, 2020	Original

1.3. Test Description

FCC Part 15.225			
Test Item	**Standard Section**	**Result**	**Test Engineer**
Conducted Emission	15.207	Pass	Terry Su
Radiated Emissions	15.209 &15.225(d)	Pass	Terry Su
Field Strength of the Fundamental	15.209 &15.225(d)	Pass	Terry Su
Occupied Bandwidth and 20dB Bandwidth	15.215	Pass	Terry Su
Antenna requirement	15.203	Pass	Terry Su
Frequency Stability	15.225(e)	Pass	Terry Su

Note: N/A: Not applicable.
The measurement uncertainty is not included in the test result.

1.4. Test Facility

Address of the report laboratory

CTC Laboratories, Inc.

Add: 1-2/F., Building 2, Jiaquan Building, Guanlan High-Tech Park, Shenzhen, Guangdong, China

Laboratory accreditation

The test facility is recognized, certified, or accredited by the following organizations:

CNAS-Lab Code: L5365
CTC Laboratories, Inc. has been assessed and proved to be in compliance with CNAS-CL01 Accreditation.Criteria for Testing and Calibration Laboratories (identical to ISO/IEC 17025:2017 General Requirements) for the Competence of Testing and Calibration Laboratories.

A2LA-Lab Cert. No.: 4340.01
CTC Laboratories, Inc. EMC Laboratory has been accredited by A2LA for technical competence in the field of electrical testing, and proved to be in compliance with ISO/IEC 17025:2017 General Requirements for the Competence of Testing and Calibration Laboratories and any additional program requirements in the identified field of testing.

Industry Canada (Registration No.: 9783A, CAB Identifier: CN0029)
CTC Laboratories, Inc. EMC Laboratory has been registered by Certification and Engineer Bureau of Industry Canada for the performance of with Registration NO.: 9783A on Jan, 2016.

FCC (Registration No.: 951311, Designation Number CN1208)
CTC Laboratories, Inc. EMC Laboratory has been registered and fully described in a report filed with the (FCC)Federal Communications Commission. The acceptance letter from the FCC is maintained inour files. Registration 951311, Aug 26, 2017.

1.5. Measurement Uncertainty

The data and results referenced in this document are true and accurate. The reader is cautioned that there may be errors within the calibration limits of the equipment and facilities. The measurement uncertainty was calculated for all measurements listed in this test report acc. to TR-100028-01" Electromagnetic compatibility and Radio spectrum Matters (ERM);Uncertainties in the measurement of mobile radio equipment characteristics; Part 1" and TR-100028-02 "Electromagnetic compatibility and Radio spectrum Matters (ERM);Uncertainties in the measurement of mobile radio equipment characteristics; Part 2 " and is documented in the CTC Laboratories, Inc. quality system acc. to DIN EN ISO/IEC 17025. Furthermore, component and process variability of devices similar to that tested may result in additional deviation. The manufacturer has the sole responsibility of continued compliance of the device.

Below is the best measurement capability for CTC Laboratories, Inc.

Test Items	Measurement Uncertainty	Notes
Transmitter power conducted	0.42 dB	(1)
Transmitter power Radiated	2.14 dB	(1)
Conducted spurious emissions 9kHz~40GHz	1.60 dB	(1)
Radiated spurious emissions 9kHz~40GHz	2.20 dB	(1)
Conducted Emissions 9kHz~30MHz	3.20 dB	(1)
Radiated Emissions 30~1000MHz	4.70 dB	(1)
Radiated Emissions 1~18GHz	5.00 dB	(1)
Radiated Emissions 18~40GHz	5.54 dB	(1)
Occupied Bandwidth	---------	(1)

Note (1): This uncertainty represents an expanded uncertainty expressed at approximately the 95% confidence level using a coverage factor of k=1.96.

1.6. Environmental conditions

During the measurement the environmental conditions were within the listed ranges:

Conducted Emission					
Temperature:	25°C	Relative Humidity:	56%	Air Pressure:	101kPa

Radiated Emission					
Temperature:	23°C	Relative Humidity:	57%	Air Pressure:	101kPa

RF Connection					
Temperature:	24°C	Relative Humidity:	55%	Air Pressure:	101kPa

1.7. EUT Operation state

The EUT has been tested under typical operating condition. The Applicant provides software to control the EUT for staying in continuous transmitting mode for testing.

1. GENERAL INFORMATION

1.1. Client Information

Applicant:	SHENZHEN ABREE COMMUNICATION TECHNOLOGY CO., LTD
Address:	Flr.3, Bld. No.50, Second Industrial Zone, Xitian Community, Guangming New Dist., Shenzhen, China
Manufacturer:	SHENZHEN ABREE COMMUNICATION TECHNOLOGY CO., LTD
Address:	Flr.3, Bld. No.50, Second Industrial Zone, Xitian Community, Guangming New Dist., Shenzhen, China

1.2. General Description of EUT

Product Name:	Multi-functional face identification door control system
Trade Mark:	N/A
Model/Type reference:	ABR06636A
Listed Model(s):	ABR06636B, ABR06636C, ABR06636D, ABR06636E, ABR06636F
Model Different:	All these models are identical in the same PCB, layout and electrical circuit, The only difference is model name.
Power supply:	12Vdc/2.5A from AC/DC Adapter
Adapter Model:	ADP-3600K120 Input: AC100-240V 50/60Hz 1A Max Output:12Vdc/3A
Hardware version:	N/A
Software version:	N/A
Test sample No.:	CTC200605-026-1-S0001
RF Parameter	
Operation frequency:	13.56MHz
Antenna type:	PCB Antenna

1.3. Accessory Equipment information

Equipment Information			
Name	Model	S/N	Manufacturer
/	/	/	/
Cable Information			
Name	Shielded Type	Ferrite Core	Length
/	/	/	/

1.4. Measurement Instruments List

Tonscend JS0806-2 Test system					
Item	Test Equipment	Manufacturer	Model No.	Serial No.	Calibrated until
1	Spectrum Analyzer	Rohde & Schwarz	FSU26	100105	Dec. 27, 2020
2	Spectrum Analyzer	Rohde & Schwarz	FUV40-N	101331	Mar. 15, 2021
3	MXG Vector Signal Generator	Agilent	N5182A	MY47420864	Dec. 27, 2020
4	Signal Generator	Agilent	E8257D	MY46521908	Dec. 27, 2020
5	Power Sensor	Agilent	U2021XA	MY5365004	Dec. 27, 2020
6	Power Sensor	Agilent	U2021XA	MY5365006	Dec. 27, 2020
7	Simultaneous Sampling DAQ	Agilent	U2531A	TW54493510	Dec. 27, 2020
8	Climate Chamber	TABAI	PR-4G	A8708055	Dec. 27, 2020
9	Wideband Radio Communication Tester	Rohde & Schwarz	CMW500	116410	Dec. 27, 2020
10	Climate Chamber	ESPEC	MT3065	/	Dec. 27, 2020
11	300328 v2.2.2 test system	TONSCEND	v2.6	/	/

Radiated Emission and Transmitter spurious emissions					
Item	Test Equipment	Manufacturer	Model No.	Serial No.	Calibrated until
1	EMI Test Receiver	Rohde & Schwarz	ESCI	100658	Dec. 27, 2020
2	High pass filter	micro-tranics	HPM50111	142	Dec. 27, 2020
3	Log-Bicon Antenna	Schwarzbeck	CBL6141A	4180	Dec. 27, 2020
4	Ultra-Broadband Antenna	ShwarzBeck	BBHA9170	25841	Dec. 27, 2020
5	Loop Antenna	LAPLAC	RF300	9138	Dec. 27, 2020
6	Spectrum Analyzer	Rohde & Schwarz	FSU26	100105	Dec. 27, 2020
7	Horn Antenna	Schwarzbeck	BBHA 9120D	647	Dec. 27, 2020
8	Pre-Amplifier	HP	8447D	1937A03050	Dec. 27, 2020
9	Pre-Amplifier	EMCI	EMC051835	980075	Dec. 27, 2020
10	Antenna Mast	UC	UC3000	N/A	N/A
11	Turn Table	UC	UC3000	N/A	N/A
12	Cable Below 1GHz	Schwarzbeck	AK9515E	33155	Dec. 27, 2020
13	Cable Above 1GHz	Hubersuhner	SUCOFLEX102	DA1580	Dec. 27, 2020
14	Splitter	Mini-Circuit	ZAPD-4	400059	Dec. 27, 2020
15	RF Connection Cable	HUBER+SUHNER	RE-7-FL	N/A	Dec. 27, 2020
16	RF Connection Cable	Chengdu E-Microwave	---	---	Dec. 27, 2020
17	High pass filter	Compliance Direction systems	BSU-6	34202	Dec. 27, 2020

18	Attenuator	Chengdu E-Microwave	EMCAXX-10 RNZ-3	---	Dec. 27, 2020
19	High and low temperature box	ESPEC	MT3065	12114019	Dec. 27, 2020

Conducted Emission					
Item	Test Equipment	Manufacturer	Model No.	Serial No.	Calibrated until
1	LISN	R&S	ENV216	101112	Dec. 27, 2020
2	LISN	R&S	ENV216	101113	Dec. 27, 2020
3	EMI Test Receiver	R&S	ESCI	100658	Dec. 27, 2020

Note:1. The Cal. Interval was one year.
2. The cable loss has calculated in test result which connection between each test instruments.

2. TEST ITEM AND RESULTS

2.1. Conducted Emission

Limit

FCC CFR Title 47 Part 15 Subpart C Section 15.207/ RSS-Gen 7.2:

Frequency range (MHz)	Limit (dBuV)	
	Quasi-peak	Average
0.15-0.5	66 to 56*	56 to 46*
0.5-5	56	46
5-30	60	50

Notes:
(1) *Decreasing linearly with logarithm of the frequency.
(2) The lower limit shall apply at the transition frequencies.
(3) The limit decrease in line with the logarithm of the frequency in the range of 0.15 to 0.50MHz.

Test Configuration

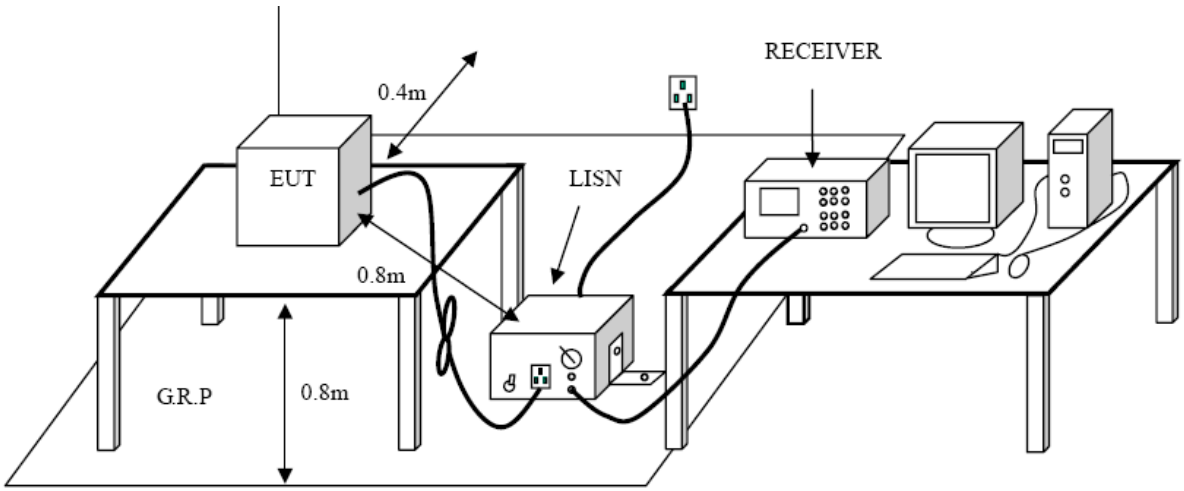

Test Procedure

1. The EUT was setup according to ANSI C63.10:2013 requirements.
2. The EUT was placed on a platform of nominal size, 1 m by 1.5 m, raised 80 cm above the conducting ground plane. The vertical conducting plane was located 40 cm to the rear of the EUT. All other surfaces of EUT were at least 80 cm from any other grounded conducting surface.
3. The EUT and simulators are connected to the main power through a line impedances stabilization network (LISN). The LISN provides a 50ohm /50uH coupling impedance for the measuring equipment.
   The peripheral devices are also connected to the main power through a LISN. (Please refer to the block diagram of the test setup and photographs)
4. Each current-carrying conductor of the EUT power cord, except the ground (safety) conductor, was individually connected through a LISN to the input power source.
5. The excess length of the power cord between the EUT and the LISN receptacle were folded back and forth at the center of the lead to form a bundle not exceeding 40 cm in length.
6. Conducted Emissions were investigated over the frequency range from 0.15MHz to 30MHz using a receiver bandwidth of 9 kHz.
7. During the above scans, the emissions were maximized by cable manipulation.

Test Mode:

Please refer to the clause 1.7.

Test Results

Test Voltage:	AC 120V/60 Hz
Terminal:	Line

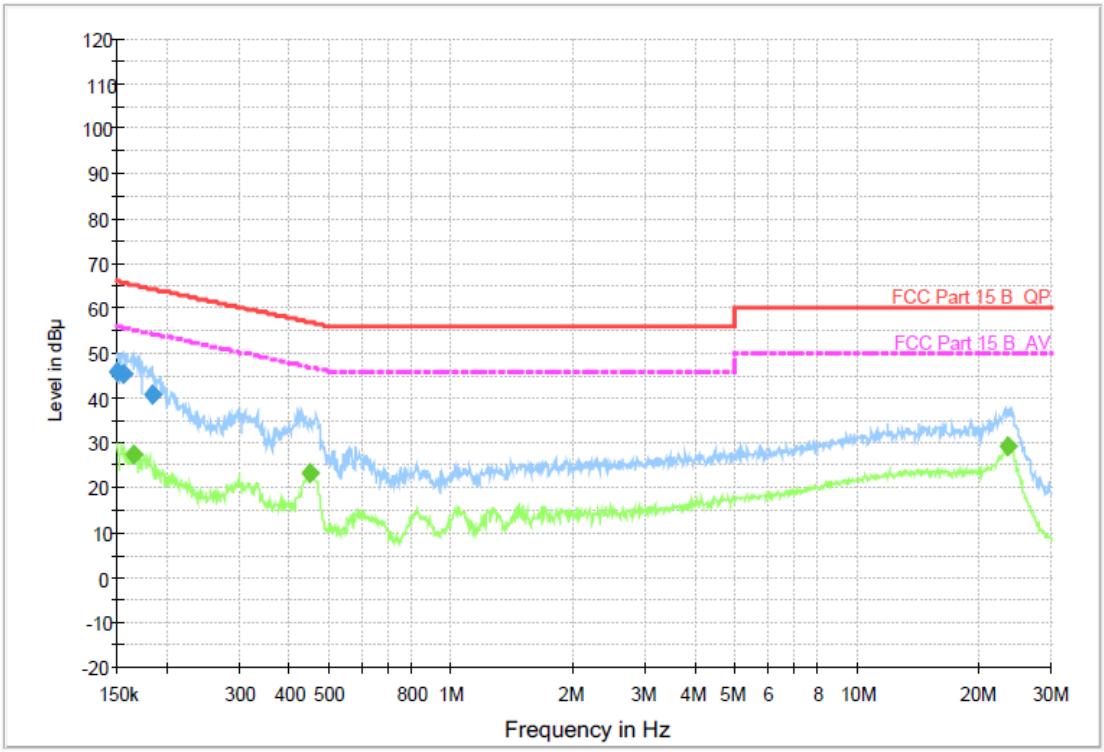

Final Measurement Detector 1

Frequency (MHz)	QuasiPeak (dB µ V)	Meas. Time (ms)	Bandwidth (kHz)	Filter	Line	Corr. (dB)	Margin (dB)	Limit (dB µ V)	Comment
0.150600	45.9	1000.00	9.000	On	L1	9.4	20.1	66.0	
0.155490	45.3	1000.00	9.000	On	L1	9.4	20.4	65.7	
0.183140	40.8	1000.00	9.000	On	L1	9.4	23.5	64.3	

Final Measurement Detector 2

Frequency (MHz)	Average (dB µ V)	Meas. Time (ms)	Bandwidth (kHz)	Filter	Line	Corr. (dB)	Margin (dB)	Limit (dB µ V)	Comment
0.164420	27.5	1000.00	9.000	On	L1	9.4	27.7	55.2	
0.447850	23.4	1000.00	9.000	On	L1	9.4	23.5	46.9	
23.401210	29.3	1000.00	9.000	On	L1	9.8	20.7	50.0	

Emission Level= Read Level+ Correct Factor

Test Voltage:	AC 120V/60 Hz
Terminal:	Neutral

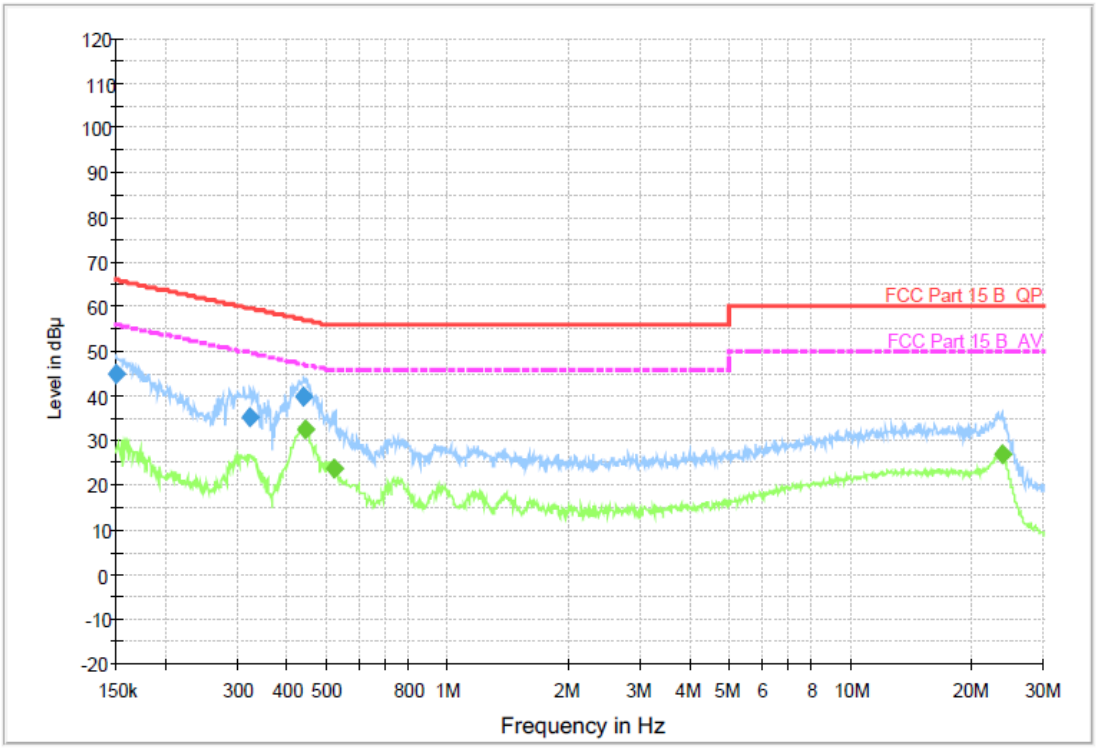

Final Measurement Detector 1

Frequency (MHz)	QuasiPeak (dB µ V)	Meas. Time (ms)	Bandwidth (kHz)	Filter	Line	Corr. (dB)	Margin (dB)	Limit (dB µ V)	Comment
0.150000	45.1	1000.00	9.000	On	N	9.4	21.0	66.0	
0.322820	35.5	1000.00	9.000	On	N	9.4	24.1	59.6	
0.437250	39.7	1000.00	9.000	On	N	9.4	17.4	57.1	

Final Measurement Detector 2

Frequency (MHz)	Average (dB µ V)	Meas. Time (ms)	Bandwidth (kHz)	Filter	Line	Corr. (dB)	Margin (dB)	Limit (dB µ V)	Comment
0.440750	32.5	1000.00	9.000	On	N	9.4	14.5	47.0	
0.521210	23.5	1000.00	9.000	On	N	9.4	22.5	46.0	
23.588790	27.2	1000.00	9.000	On	N	9.8	22.8	50.0	

Emission Level= Read Level+ Correct Factor

2.2. Radiated Emission

FCC Limit

FCC Part 15.209				
Frequency (MHz)	Field Strength Limitation		Field Strength Limitation at 3m Measurement Dist	
	(uV/m)	Dist	(uV/m)	(dBuV/m)
0.009 – 0.490	2400 / F(KHz)	300m	10000 * 2400/F(KHz)	20log 2400/F(KHz) + 80
0.490 – 1.705	24000 / F(KHz)	30m	100 * 24000/F(KHz)	20log 24000/F(KHz) + 40
1.705 – 30.00	30	30m	100* 30	20log 30 + 40
30.0 – 88.0	100	3m	100	20log 100
88.0 – 216.0	150	3m	150	20log 150
216.0 – 960.0	200	3m	200	20log 200
Above 960.0	500	3m	500	20log 500

NOTE:

(1) The tighter limit shall apply at the boundary between two frequency range.
(2) Limitation expressed in dBuV/m is calculated by 20log Emission Level (uV/m).
(3) If measurement is made at 3m distance, then F.S Limitation at 3m distance is adjusted by using the formula of $L_{d1} = L_{d2} * (d_2/d_1)^2$.
Example:
F.S Limit at 30m distance is 30uV/m , then F.S Limitation at 3m distance is adjusted as $L_{d1} = L_1 =$ 30uV/m * $(10)^2$ = 100 * 30 uV/m
(4) The test result calculated as following:
Measurement Value = Reading Level + Correct Factor
Correct Factor = Insertion Loss + Cable Loss + Attenuator Factor(if use)
Margin Level = Measurement Value – Limit Value

Test Configuration

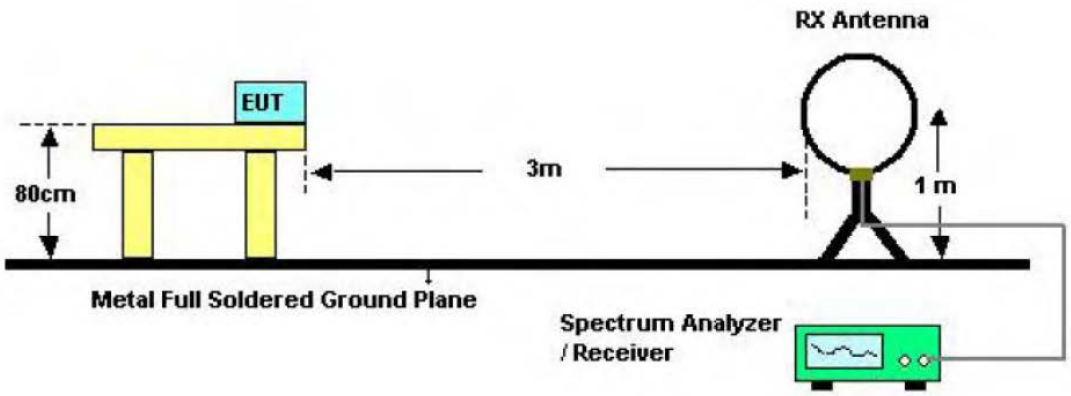

Below 30MHz Test Setup

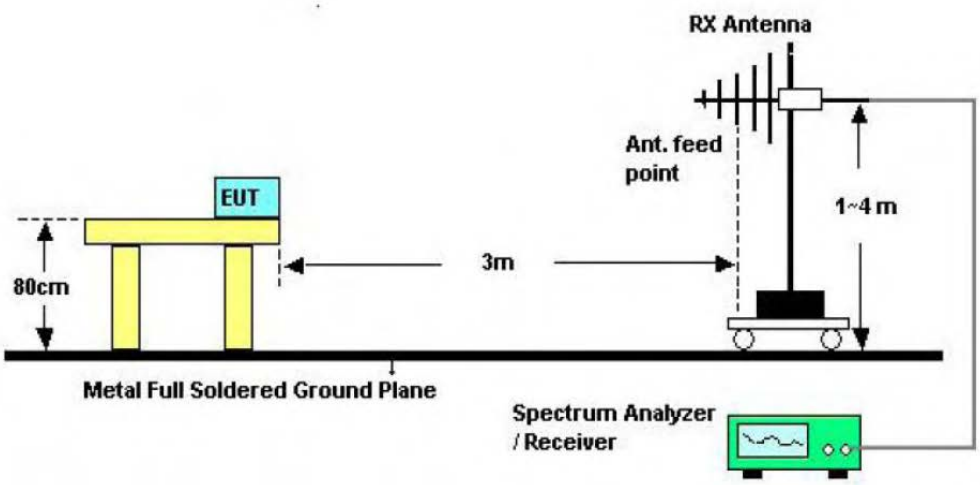

Below 1000MHz Test Setup

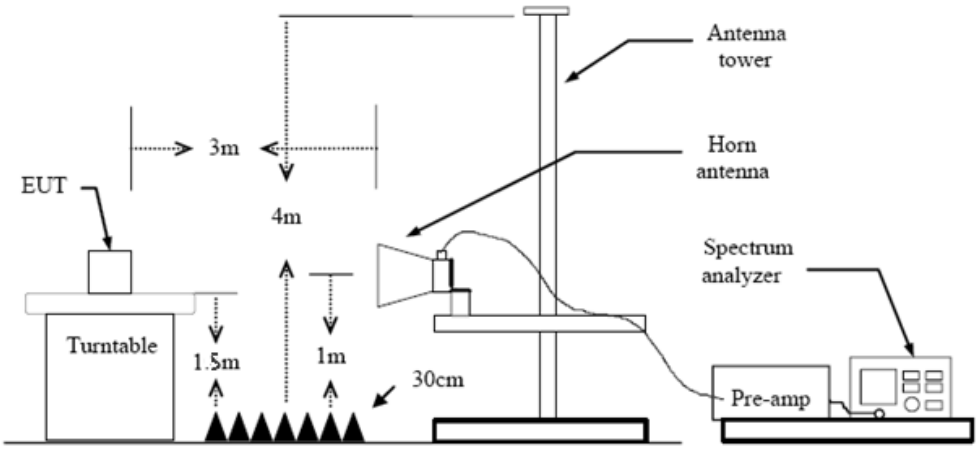

Above 1GHz Test Setup

Test Procedure

1. The EUT was setup and tested according to ANSI C63.10:2013
2. The EUT is placed on a turn table which is 0.8 meter above ground for below 1 GHz, and 1.5 m for above 1 GHz. The turn table is rotated 360 degrees to determine the position of the maximum emission level.
3. The EUT was set 3 meters from the receiving antenna, which was mounted on the top of a variable height antenna tower.
4. For each suspected emission, the EUT was arranged to its worst case and then tune the Antenna tower (from 1 m to 4 m) and turntable (from 0 degree to 360 degrees) to find the maximum reading. A pre-amp and a high pass filter are used for the test in order to get better signal level to comply with the guidelines.
5. Set to the maximum power setting and enable the EUT transmit continuously.
6. Use the following spectrum analyzer settings

   (1) Span shall wide enough to fully capture the emission being measured;

   (2) Below 1 GHz:

   RBW=120 kHz, VBW=300 kHz, Sweep=auto, Detector function=peak, Trace=max hold;

   If the emission level of the EUT measured by the peak detector is 3 dB lower than the applicable limit, the peak emission level will be reported. Otherwise, the emission measurement will be repeated using the quasi-peak detector and reported.

   (3) From 1 GHz to 10th harmonic:

   RBW=1MHz, VBW=3MHz Peak detector for Peak value.

RBW=1MHz, VBW=3MHz RMS detector for Average value.

Test Mode

Please refer to the clause 1.7.

Test Result

9 KHz~0.15 MHz

Ant. Pol.	Horizontal

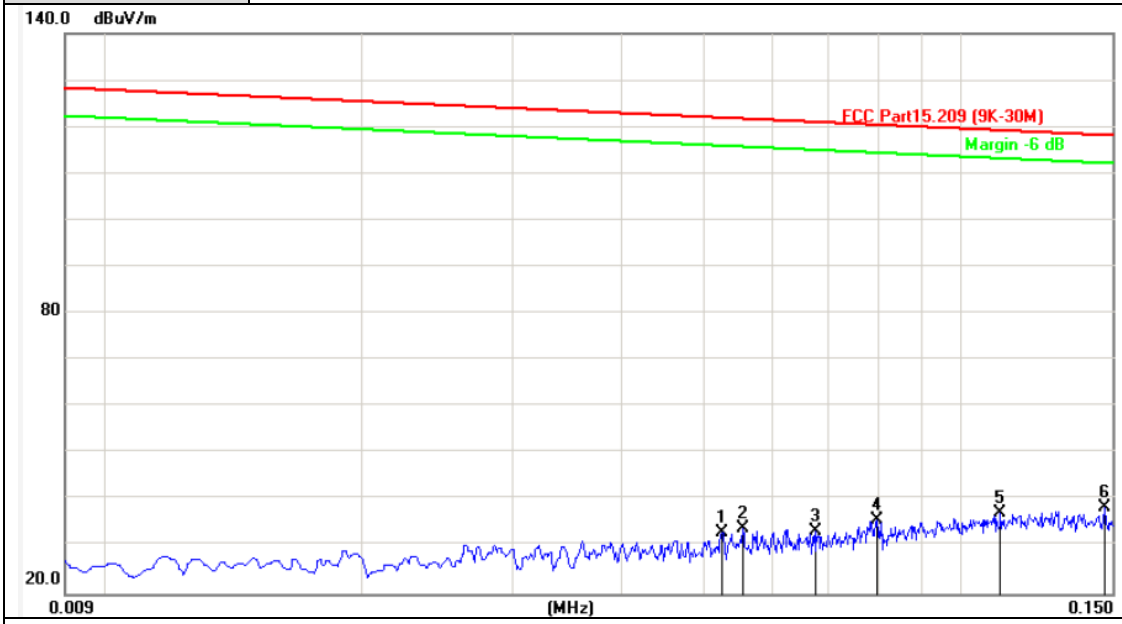

No.	Frequency (MHz)	Factor (dB/m)	Reading (dBuV)	Level (dBuV/m)	Limit (dBuV/m)	Margin (dB)	Detector
1	0.0526	18.70	14.41	33.11	125.35	-92.24	QP
2	0.0557	18.68	15.20	33.88	125.12	-91.24	QP
3	0.0678	18.62	14.78	33.40	124.25	-90.85	QP
4	0.0798	17.53	18.07	35.60	123.39	-87.79	QP
5	0.1111	16.62	20.77	37.39	121.13	-83.74	QP
6	0.1473	16.62	21.70	38.32	118.52	-80.20	QP

Remarks:
1.Factor (dB/m) = Antenna Factor (dB/m)+Cable Factor (dB)-Pre-amplifier Factor
2.Margin value = Level -Limit value

Ant. Pol.	Vertical

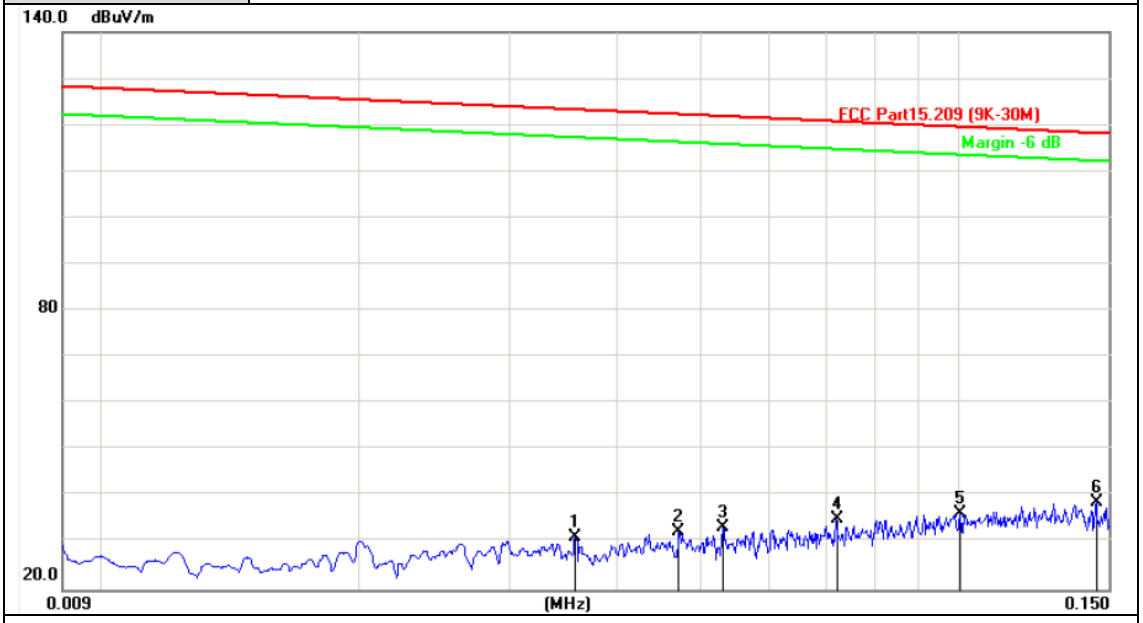

No.	Frequency (MHz)	Factor (dB/m)	Reading (dBuV)	Level (dBuV/m)	Limit (dBuV/m)	Margin (dB)	Detector
1	0.0358	19.28	11.99	31.27	126.56	-95.29	QP
2	0.0472	18.82	13.52	32.34	125.74	-93.40	QP
3	0.0531	18.69	14.51	33.20	125.31	-92.11	QP
4	0.0722	18.37	16.64	35.01	123.93	-88.92	QP
5	0.1007	16.52	19.90	36.42	121.88	-85.46	QP
6	0.1451	16.63	22.18	38.81	118.67	-79.86	QP

Remarks:
1.Factor (dB/m) = Antenna Factor (dB/m)+Cable Factor (dB)-Pre-amplifier Factor
2.Margin value = Level -Limit value

0.15MHz~30 MHz

Ant. Pol.	Horizontal

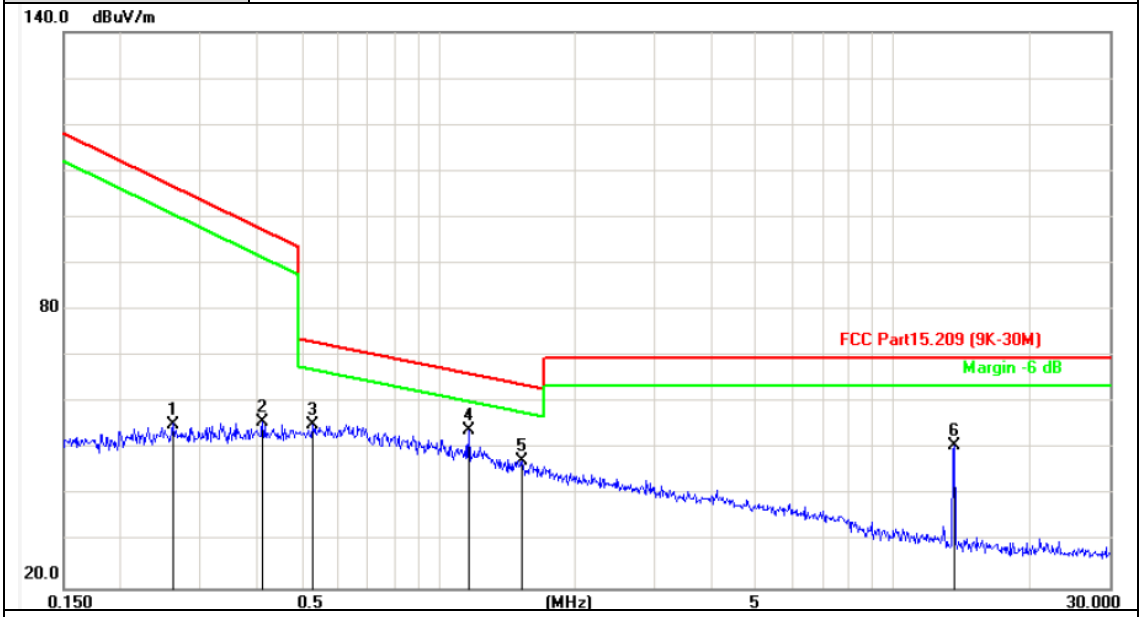

No.	Frequency (MHz)	Factor (dB/m)	Reading (dBuV)	Level (dBuV/m)	Limit (dBuV/m)	Margin (dB)	Detector
1	0.2603	16.58	38.82	55.40	110.36	-54.96	QP
2	0.4105	16.53	39.39	55.92	99.53	-43.61	QP
3	0.5293	16.51	38.86	55.37	73.45	-18.08	QP
4	1.1657	16.61	37.55	54.16	67.79	-13.63	QP
5	1.5274	16.59	30.87	47.46	64.58	-17.12	QP
6	13.6228	16.60	34.10	50.70	69.50	-18.80	QP

Remarks:
1.Factor (dB/m) = Antenna Factor (dB/m)+Cable Factor (dB)-Pre-amplifier Factor
2.Margin value = Level -Limit value

Ant. Pol.	Vertical

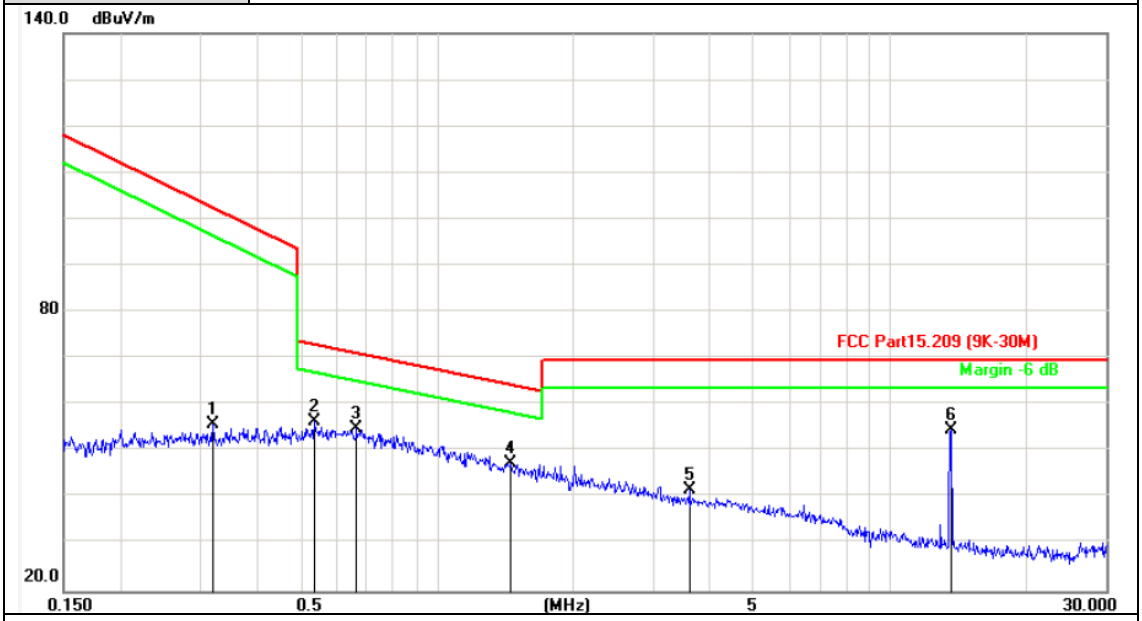

No.	Frequency (MHz)	Factor (dB/m)	Reading (dBuV)	Level (dBuV/m)	Limit (dBuV/m)	Margin (dB)	Detector
1	0.3200	16.56	39.32	55.88	106.06	-50.18	QP
2	0.5378	16.51	40.00	56.51	73.37	-16.86	QP
3	0.6648	16.53	38.28	54.81	72.25	-17.44	QP
4	1.4562	16.58	30.91	47.49	65.21	-17.72	QP
5	3.6034	16.58	25.03	41.61	69.50	-27.89	QP
6	13.6228	16.60	38.18	54.78	69.50	-14.72	QP

Remarks:
1.Factor (dB/m) = Antenna Factor (dB/m)+Cable Factor (dB)-Pre-amplifier Factor
2.Margin value = Level -Limit value

30MHz-1GHz

Ant. Pol.	Horizontal

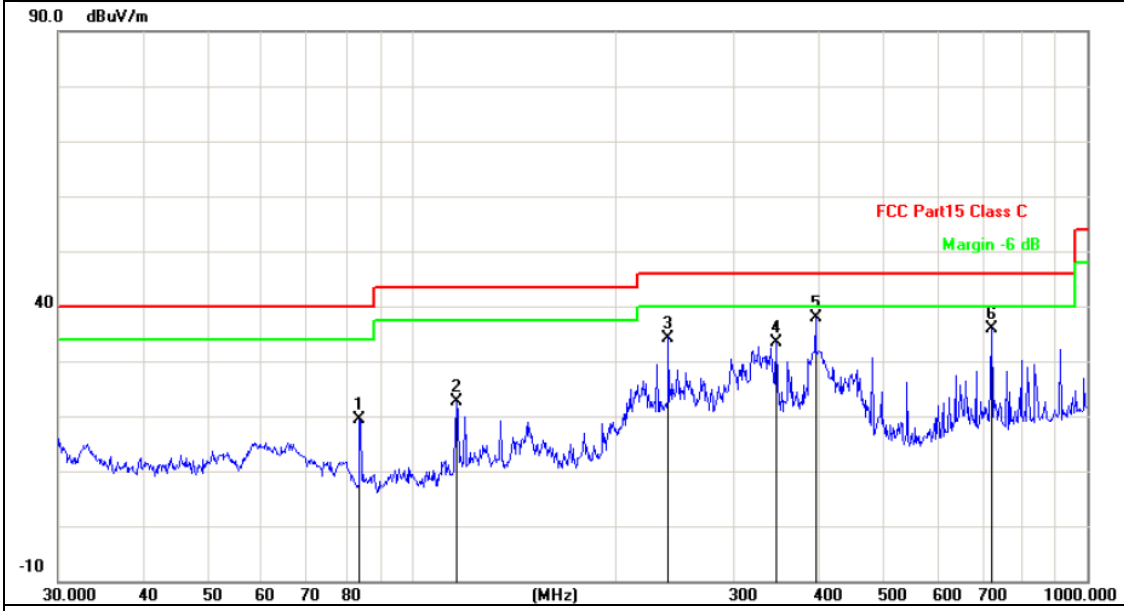

No.	Frequency (MHz)	Factor (dB/m)	Reading (dBuV)	Level (dBuV/m)	Limit (dBuV/m)	Margin (dB)	Detector
1	83.8156	-21.85	41.14	19.29	40.00	-20.71	QP
2	116.5401	-19.59	42.34	22.75	43.50	-20.75	QP
3	239.9873	-19.48	53.73	34.25	46.00	-11.75	QP
4	346.8092	-16.79	50.24	33.45	46.00	-12.55	QP
5	396.2415	-15.86	53.76	37.90	46.00	-8.10	QP
6	721.7259	-10.47	46.39	35.92	46.00	-10.08	QP

Remarks:
1.Factor (dB/m) = Antenna Factor (dB/m)+Cable Factor (dB)-Pre-amplifier Factor
2.Margin value = Level -Limit value

Ant. Pol.	Vertical

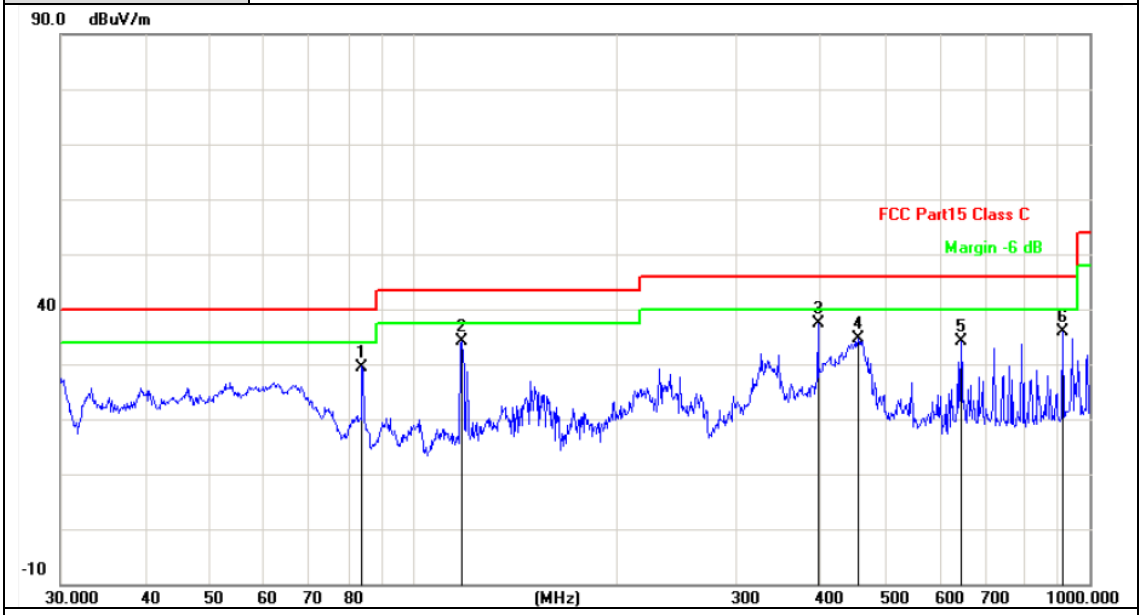

No.	Frequency (MHz)	Factor (dB/m)	Reading (dBuV)	Level (dBuV/m)	Limit (dBuV/m)	Margin (dB)	Detector
1	83.8155	-21.85	51.35	29.50	40.00	-10.50	QP
2	117.7725	-19.49	53.61	34.12	43.50	-9.38	QP
3	396.2415	-15.86	53.14	37.28	46.00	-8.72	QP
4	454.3099	-14.44	49.08	34.64	46.00	-11.36	QP
5	645.1194	-11.55	45.64	34.09	46.00	-11.91	QP
6	912.8620	-8.08	43.85	35.77	46.00	-10.23	QP

Remarks:
1.Factor (dB/m) = Antenna Factor (dB/m)+Cable Factor (dB)-Pre-amplifier Factor
2.Margin value = Level -Limit value

2.3. Occupied Bandwidth 20 dB Bandwidth

Limit

FCC CFR Title 47 Part 15 Subpart C Section 15.215
Intentional radiators must be designed to ensure that the 20dB emission bandwidth in the specific band.

Test Configuration

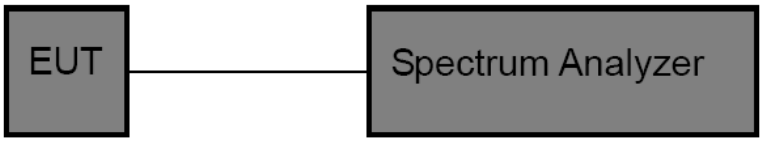

Test Procedure

1. The EUT was directly connected to the spectrum analyzer and antenna output port as show in the block diagram above.
2. Spectrum Setting:
   (1) Set RBW = 10 kHz.
   (2) Set the video bandwidth (VBW) ≥ RBW.
   (3) Detector = Peak.
   (4) Trace mode = Max hold.
   (5) Sweep = Auto couple.

Test Mode

Please refer to the clause 1.7.

Test Results

Channel Frequency(MHz)	Occupied Bandwidth (kHz)	20dB Bandwidth (kHz)	Result
13.56	10.42	12.45	PASS

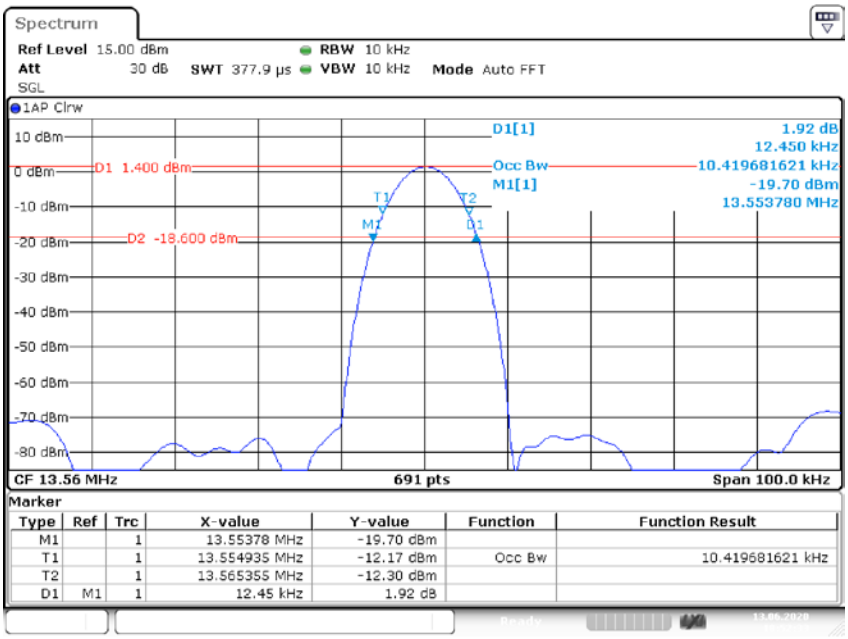

2.4. Field Strength of the Fundamental

Limit

FCC CFR Title 47 Part 15 Subpart C Section 15.225(a)(b)(c)

Fundamental frequency(MHz)	Field strength of fundamental (uV/m @30m)	Field strength of fundamental (dBuV/m @3m)
13.553-13.567	15848	124.0
13.410-13.553&13.567-13.710	334	90.5
13.110-13.410&13.710-14.010	106	80.5

Note: Limit dBuV/m @3m =Limit dBuV/m @30m +40*log(30/3)= Limit dBuV/m @30m + 40.

Test Configuration

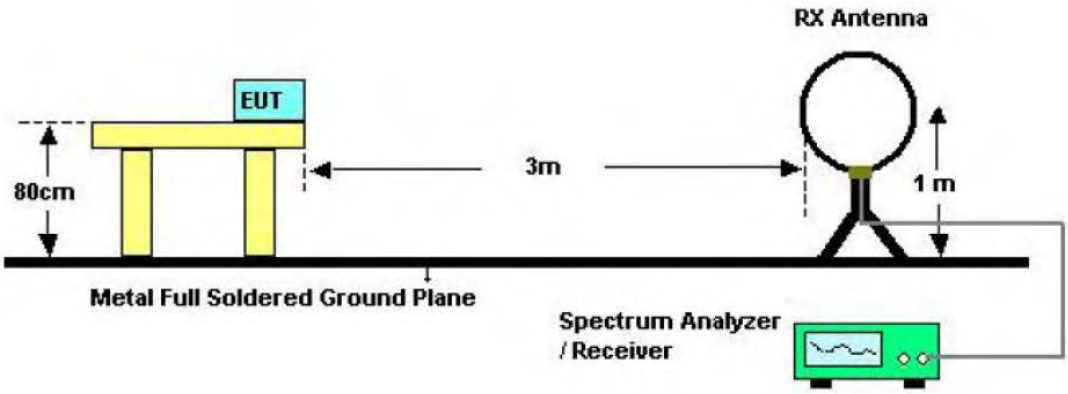

Below 30MHz Test Setup

Test Procedure

1. The EUT was setup and tested according to ANSI C63.10:2013 requirements.
2. The EUT is placed on a turn table which is 0.8 meter above ground. The turn table is rotated 360 degrees to determine the position of the maximum emission level.
3. The EUT was positioned such that the distance from antenna to the EUT was 3 meters.
4. The antenna is scanned from 1 meter to 4 meters to find out the maximum emission level. This is repeated for both horizontal and vertical polarization of the antenna. In order to find the maximum emission, all of the interface cables were manipulated according to ANSI C63.10:2013 on radiated measurement.

Test Mode

Please refer to the clause 1.7.

Test Result

Ant. Pol.	Horizontal

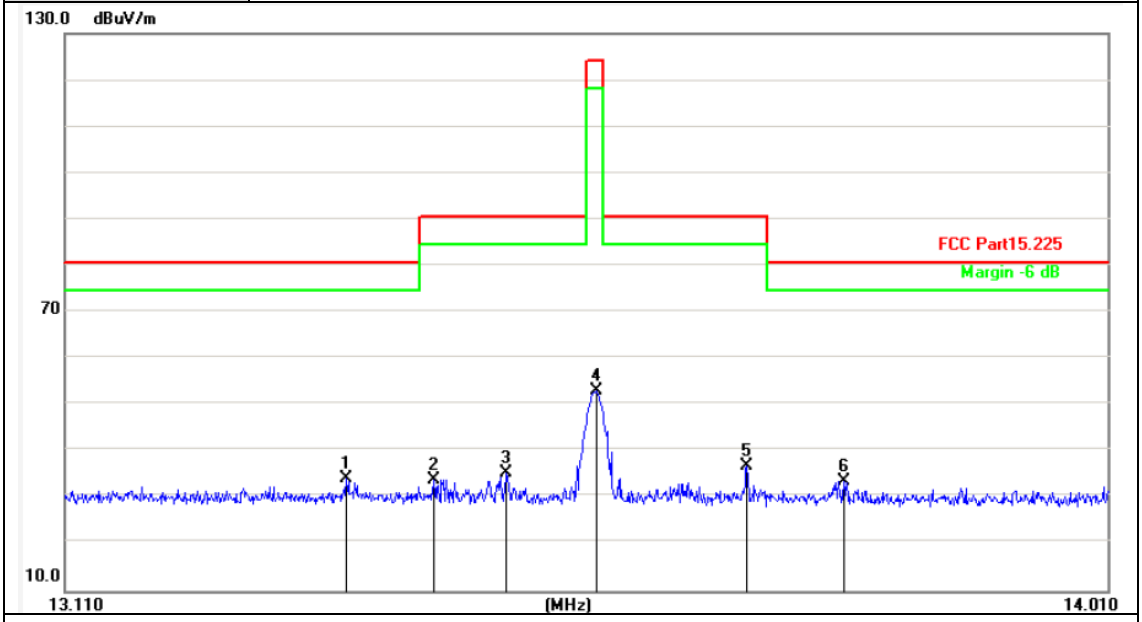

No.	Frequency (MHz)	Factor (dB/m)	Reading (dBuV)	Level (dBuV/m)	Limit (dBuV/m)	Margin (dB)	Detector
1	13.3476	16.60	17.42	34.02	80.50	-46.48	QP
2	13.4223	16.60	17.32	33.92	90.50	-56.58	QP
3	13.4835	16.60	18.68	35.28	90.50	-55.22	QP
4	13.5618	16.60	36.32	52.92	124.00	-71.08	QP
5	13.6923	16.60	20.34	36.94	90.50	-53.56	QP
6	13.7769	16.60	17.00	33.60	80.50	-46.90	QP

Remarks:
1.Factor (dB/m) = Antenna Factor (dB/m)+Cable Factor (dB)-Pre-amplifier Factor
2.Margin value = Level -Limit value

Ant. Pol.	Vertical

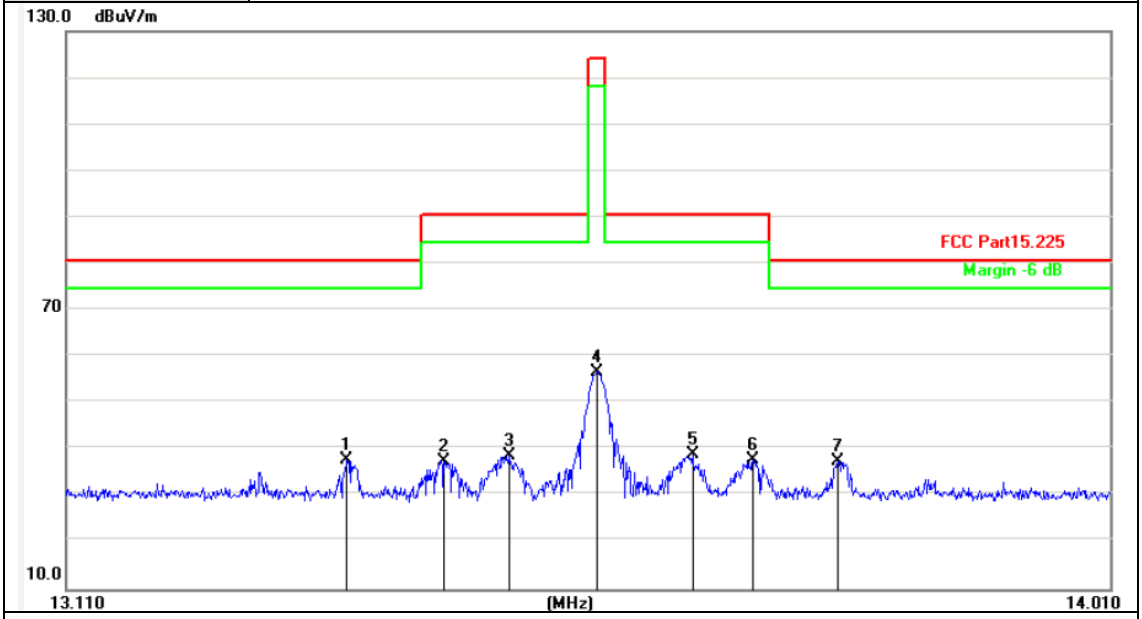

No.	Frequency (MHz)	Factor (dB/m)	Reading (dBuV)	Level (dBuV/m)	Limit (dBuV/m)	Margin (dB)	Detector
1	13.3467	16.60	21.09	37.69	80.50	-42.81	QP
2	13.4295	16.60	20.96	37.56	90.50	-52.94	QP
3	13.4844	16.60	22.06	38.66	90.50	-51.84	QP
4	13.5600	16.60	40.03	56.63	124.00	-67.37	QP
5	13.6437	16.60	22.41	39.01	90.50	-51.49	QP
6	13.6959	16.60	21.05	37.65	90.50	-52.85	QP
7	13.7697	16.60	20.87	37.47	80.50	-43.03	QP

Remarks:
1.Factor (dB/m) = Antenna Factor (dB/m)+Cable Factor (dB)-Pre-amplifier Factor
2.Margin value = Level -Limit value

2.5. Frequency Stability

Limit

The frequency tolerance of the carrier signal shall be maintained within ±0.01% of the operating frequency over a temperature variation of −20 degrees to + 50 degrees C at normal supply voltage, and for a variation in the primary supply voltage from 85% to 115% of the rated supply voltage at a temperature of 20 degrees C. For battery operated equipment, the equipment tests shall be performed using a new battery.

Test Configuration

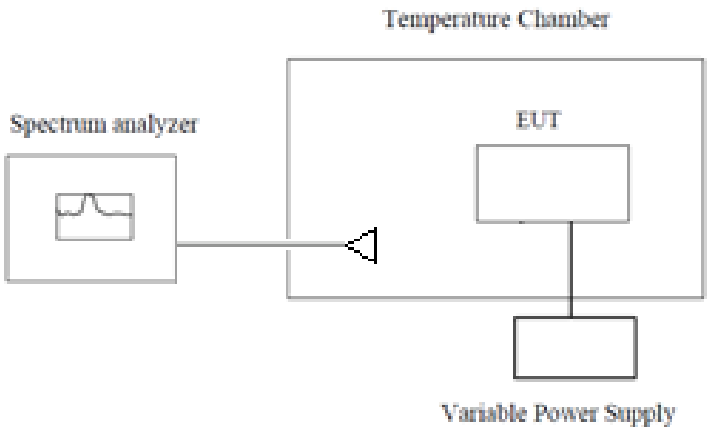

Test Procedure

1. The equipment under test was connected to an external power supply.
2. RF output was connected to a frequency counter or spectrum analyzer via feed through attenuators.
3. The EUT was placed inside the temperature chamber.
4. Set the spectrum analyzer RBW low enough to obtain the desired frequency resolution and measure EUT 25 ℃ operating frequency as reference frequency.
5. Turn EUT off and set the chamber temperature to -20℃. After the temperature stabilized for approximately 30 minutes recorded the frequency.
6. Repeat step measure with 10℃ increased per stage until the highest temperature of +50℃ reached.

Test Mode:

Please refer to the clause 1.7

Test Result

Test Environment		Frequency Reading(MHz)	Frequency Error(%)	Limit	Result
Voltage	Temperature(℃)				
DC 12.0V	-20	13.56015	0.0011%	±0.01%	Pass
	-10	13.56008	0.0006%	±0.01%	Pass
	0	13.56006	0.0004%	±0.01%	Pass
	10	13.56010	0.0007%	±0.01%	Pass
	20	13.56011	0.0008%	±0.01%	Pass
	30	13.56007	0.0005%	±0.01%	Pass
	40	13.56002	0.0001%	±0.01%	Pass
	50	13.56011	0.0008%	±0.01%	Pass
DC 13.2V	20	13.56007	0.0005%	±0.01%	Pass
DC 10.8V	20	13.56003	0.0002%	±0.01%	Pass

2.6. Antenna requirement

Requirement

FCC CFR Title 47 Part 15 Subpart C Section 15.203:

An intentional radiator shall be designed to ensure that no antenna other than that furnished by the responsible party shall be used with the device. The use of a permanently attached antenna or of an antenna that uses a unique coupling to the intentional radiator, the manufacturer may design the unit so that a broken antenna can be replaced by the user, but the use of a standard antenna jack or electrical connector is prohibited.

Refer to statement below for compliance.

The manufacturer may design the unit so that the user can replace a broken antenna, but the use of a standard antenna jack or electrical connector is prohibited. Further, this requirement does not apply to intentional radiators that must be professionally installed.

Test Result

The directional gain of the antenna less than 6dBi, please refer to the EUT internal photographs antenna photo.

**********THE END**********