User Manual

Parts Of The Camera

1. IR LED
2. Microphone
3. Lens
4. Front motion sensor
5. DC adapter port
6. Side motion sensor
7. Indicator light
8. Memory card slot
9. USB jack
10. Left/playback button
11. ON-TEST-OFF button
12. Down/Capture Button
13. Menu Button
14. OK/Shot button
15. Right button
16. Up/Video Button
17. Speaker
18. Display screen

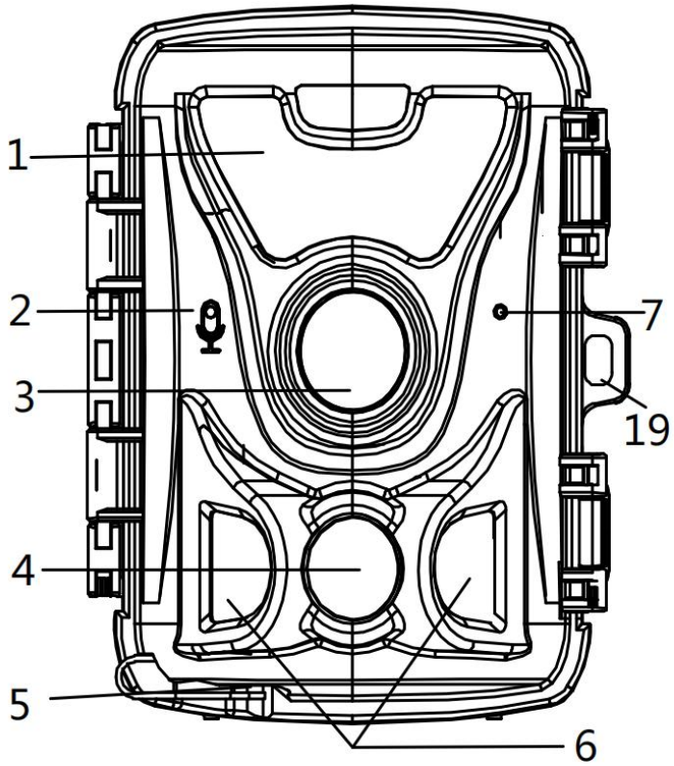

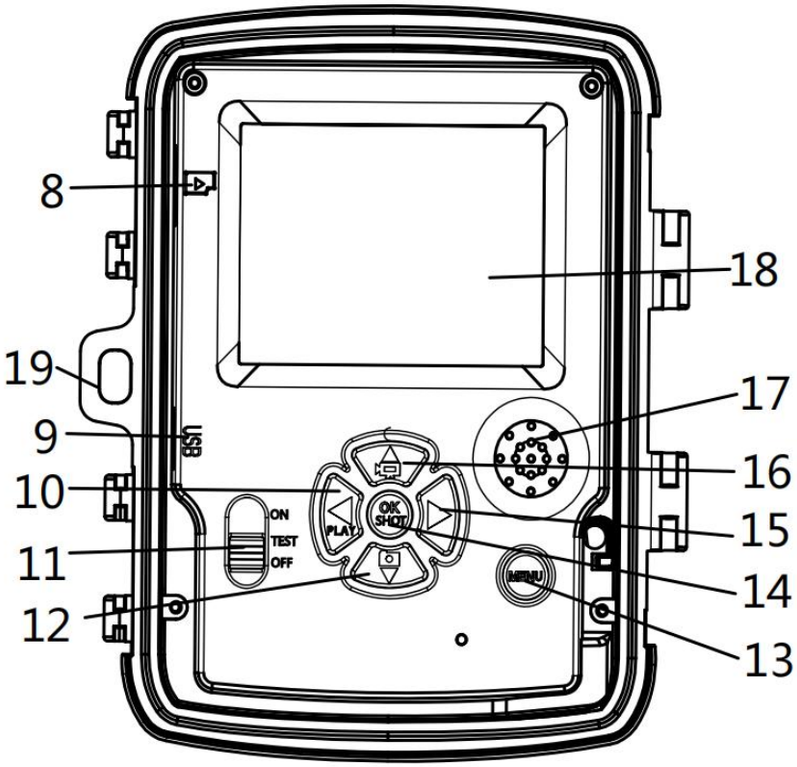

19. Lock hole

Power Supply

Before using the device, users can choose battery charging or DC power supply according to their needs. If you choose battery power, please insert the batteries first. This device supports 1.5 V AA batteries and 3.7V 18650 lithium batteries.

♦ If you choose to use 1.5 V AA batteries, please open the device and find the battery compartment, insert 4*1.5 V AA batteries. When inserting the battery, make sure that the battery polarity is correct.

♦ If you choose to use 3.7V 18650 lithium battery, please open the device and find the corresponding battery compartment, which can be loaded with 1 or 2 3.7V 18650 lithium battery. When installing the battery, ensure that the battery polarity is correct. (The 3.7V 18650 lithium battery of the device can be charged with a USB charger above DC5V1.5A, the indicator light of the case will turn on red when charging and the red light will turn off when fully charged)

♦When using the power adapter above DC6V1.5A (not provided) to charge, please find the DC adapter port on the bottom of the device and open the rubber, connect one end of the power adapter to the device and the other end to the power supply for supply power.

Inserting The Memory Card

Please prepare a memory card and insert it into the camera for saving files. Before recording, please format the memory card first.

♦ Support memory card,up to 512GB. Suggest to use class 6 or above high speed card.

♦ To avoid malfunction, the memory card should be far away from water, strong vibration,dust, hot source and direct sunlight.

♦ Do not insert the memory card forcibly. Please refer to the marking on the camera.

♦ For the first time use, please wait for the memory card temperature reach the ambient temperature.The camera will be

short-circuit influenced by environment temperature and humidity. Please notice protection for the camera when using it outdoor.

♦ If the capacity of memory card is full, the camera will stop recording automatically.

♦ Press the edge of the card gently to pop-up the memory card.

Basic Operation

Turn On And Off The Camera

Switch the Mode Button to“Test/On”to turn on the camera.After power on, it will pop up the battery type selection interface: 1.5V alkaline battery/3.7V lithium battery, press the up and down keys to select the corresponding battery, press the OK button to confirm.

Switch the Mode Button to “Off” to turn off the camera.

System Setup

Switch Mode Button to “Test”, then you can set the system parameters.

1. Press Menu button to open the setup menu.
2. Press Up/Down button to scan all menu. Then press OK button to enter the options interface.
3. Press Up/Down button to scan all options. And press OK button to confirm options.
4. Press Menu button again to turn back to last menu or exit the setup menu.

Setup menu and function as below:

Mode

Set the working mode. In photo mode,the camera just take pictures. In Video mode,the camera just record video. In photo&video mode, the camera will take a photo first, then start to record video.

Options : [Photo]/[Video]/[Photo&Video].

Photo Resolution

Set the still image resolution.

Options : [20MP(6144x3456P)] /[16MP(5376x3024P)] /[12MP (4608x2592P)]/[8MP(3840x2160P)]/[5MP(3072x1728P)]/

[3MP(2304 x 1296P)] /[1MP(1280x720P)].

Photo Series

Set the photo number of continuous shooting. In photo mode, the camera will take photos continuously.

Options : [1 photo]/[2 photos in series]/[3 photos in series]/[10 photos in series].

Video Resolution

Set the video resolution. The higher the resolution, the shorter the video duration that can be stored, and vice versa .

Options : [1920x1080P]/[1280x720P]/[848x480P]/[720x480P]/ [640x480P]/[320x240P].

TL Video Resolution

Set the resolution of time lapse video . Options: [8MP (3840 x 2160P)]/[5MP (3072 x1728P)]/[3MP(2304x1296P)].

Video Length

Set the duration of recording a video clip. The shortest time is 3 seconds and the longest time is 2 minutes.

Options : 3 seconds~2 minutes.

Audio Recording

Open this function,the camera will record audio when recording video. Options : [On] /[Off].

Shot Lag

Set the time of delay shooting when the camera detects the motion. In the selected time, the camera will not record any image or video. This function can avoid to store too much same event and save more capacity.

Options : 5 seconds~60 minutes.

Sensitivity Motion Sensors

Set the sensitivity of the sensor. Environmental impact is small indoors, you can choose “Low”. In outdoor, choose “Middle”in normal condition. Choose “High”if the environment impact is

huge outdoors. The temperature can also influence the sensor sensitivity. “High Sensitivity”applies to mild environment. ”Low Sensitivity ”applies to cold environment.

Options：[Low] /[Middle] /[High].

Target Recording Time

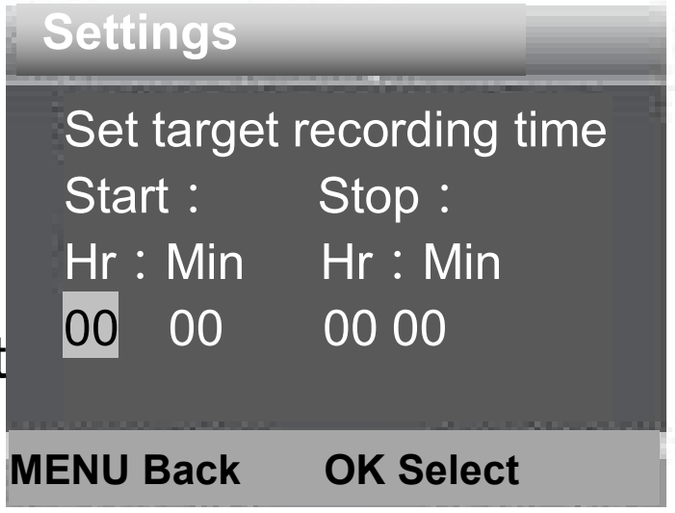

Set the target recording time. As shown in below picture, you can set the start and stop time. The camera will work just in the stated time slot. In other time, the camera will keep in standby state.

Options：[On]/ [Off].

Target Recording Time 2

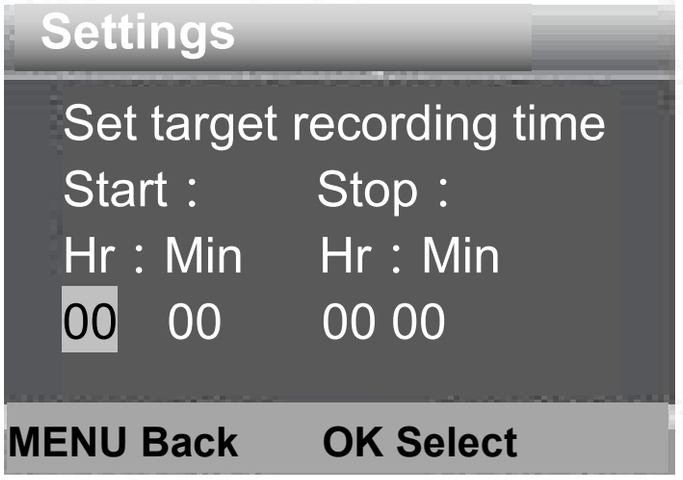

Set the target recording time. As shown in below picture, you can set the start and stop time. The camera will work just in the stated time slot. In other time, the camera will keep in standby state. Options：[On]/ [Off].

Time Lapse

In Time lapse menu, there are three options as below.

[Normal]: The camera will take pictures automatically as per set time interval. For example,set the interval time to 1 hour, the camera will take a photo each hour. If you want to observe that a plant blooms, the camera will take 24 photos in 24 hours to record the whole process of blooming.

[TL Video]: You can set the interval time.The time range is from 1 second to 24 hours. For example, set the interval to 1 hour, the camera will take a photo each hour. If the camera works for 24 hours,there will be 24 photos. These photos will be converted into a video.

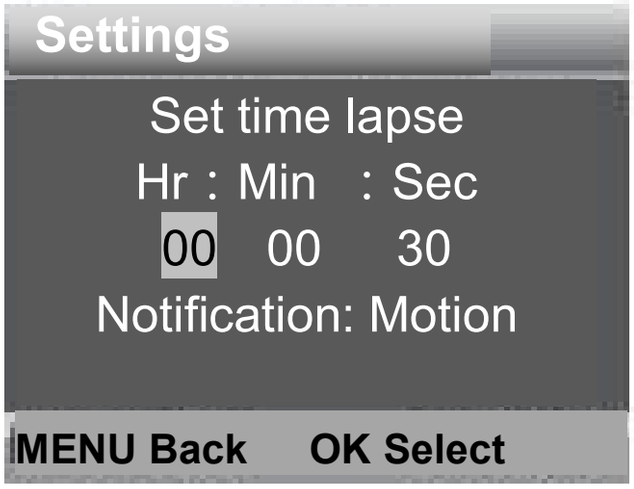

[Off]: Close the time lapse function.

Language

Set the language display on screen.Options：[English]/ [Deutsch] /[Dansk]/[Suomi]/[Svenska]/[Español]/[Français]/[Italiano]/ [Nederlands]/[Portugués] /[简体中文]/ [繁体中文] /[日本语].

Endless Capture

Set the camera to record video in loop.

Options：[On]/[Off].

Time & Date

Set the date and time of camera.

The date format: dd/mm/yyyy, yyyy/mm/dd，mm/dd/yyyy.

The time format: 24h，12h.

Press Right button to choose the item.Press Up/Down button to adjust the value. And press OK button to confirm.

Options：[Set time&date] /[Time format]/[Date format].

Photo Stamp

Stamp the date&time on the photos or not.

Options：[Time&date] /[Date] /[Off].

Password Protection

Set the power-on password of the camera. The password is four digits，each digit ranges from 0 to 9 and A to Z.

If you forget the password, please reset the camera. Then all

parameters will reset to the factory settings.
Options：[On]/[Off].

WIFI SSID

You can view the WIFI name of the device.

WIFI Password

Set and change the WIFI password.

Beep Sound

Open/close the button sound.
Options：[On]/[Off].

Format Memory Card

Formatting the memory card will delete all data permanently. Before using a new memory card or a card that has been used in another device previously ,please format the memory card.
Options：[Yes]/ [No].

Serial NO.

Set the unique serial number for the camera. The number is four digits，each digit ranges from 0 to 9 and A to Z.

Options：[On]/[Off].

Reset Settings

Restore the camera to factory default settings including password,serial number and so on. Options：[On]/[Off].

Version

Look up the Firmware information of the camera.

➢ Take Photos、Record Video、Playback

Switch the Mode Button to “Test”. In this mode,you can take photos, record video and playback files manually.

♦ Take Photos：Press Capture button to switch to photo mode. Press Shot button to take a picture.

♦ Record Video：Press Video button to switch to video mode.Press Shot button to start to record a video clip. Press Shot button again to stop recording.

♦ Playback:Press Playback button to enter the playback interface. Press Up/Down button to scan photos or video. When playback video, press OK button to play the video. Press OK

button again to have a pause. Press Menu button to stop playback. Press Playback button again to exit the playback mode.

Playback Menu：

1) **Delete current file** : Delete the current photo or video. Options : 【Cancel】/【Delete】.

2)**Delete all files :**Delete all photo and video files in the memory card. Options : 【Cancel】/【Delete】.

3) **Activate slide show :** Playback the photos in slide way. Each photo display 3 seconds. Press OK button to stop playing.

4) **Write protect :** Lock the file. It can avoid accident deletion. Options : 【Write-protect current file】/【Write-protect all files】/【Unlock current file】/【Unlock all files】.

➢ Working Mode

Switch the Mode Button to “On”. After turn on the camera,the screen will display 15 seconds countdown. Then the LEDs and screen will go out. The camera begins to operate independently and enter standby mode.

If the wild animals enter the detection range of the motion sensors , the camera will be activated and detect the motion trail. If the wild animals continue to move to the detection zone of the sensor, the camera will take photos or record video automatically.

When the wild animals leave the detection zone of the sensors , the camera will be deactivated and turn back to standby mode.

➢ Night Mode

In night mode,the pictures just can display white and black.

When record a video for long time in the evening, the low voltage may have a great influence on the stability of the machine. Do not record video with low voltage in the evening.

Using the wall bracket

You can mount the camera on a wall or tree by the supplied wall bracket. Before mounting the wall bracket you should ensure that all existing screws are tight.The best installation height distance from the ground about 1 meter.

Components

1.Tripod screw

2. Lock nut

3. Pivot bolts

4. Drill holes

5. Hexagonal screw

6. Wall plugs

7. Screws

Mounting the wall bracket

Required tools

■ Drill

■ 6 mm masonry/concrete drill bit

■ Phillips head screwdriver

Caution

♦ Ensure that there are no electric lines, water or heating pipes installed at the proposed drilling location.

♦ The supplied wall plugs are only suitable for mounting on concrete or stone. Before starting the installation, please check

your installation location carefully for its suitability for the plugs. The assembly material used must be suitable for the respective location. If in doubt, consult a professional.

Install Steps

♦ Mark the drill holes by holding the foot of the wall bracket at the desired mounting location and marking the hole positions.

♦ Use a drill with a 6 mm drill bit to drill the required holes and insert the plugs and insert the wall plugs flush with the wall.

♦ Screw the wall bracket to the wall using the supplied screws .

♦ Mount the camera on the tripod screw and screw the camera a little way on (about three turns).

♦ Turn the camera in the desired direction and lock it with the lock nut .

♦ To move the camera into its final position, undo the two pivot bolts a little, position the camera and fix the position by tightening the two pivot bolts .

➢ Remote Control by Mobile App/ Wi-Fi Connecting

This camera can be remotely operated almost full functions via a Pad or Smartphone. Before perform remote control of this camera, an APP named “GcamPro” should be downloaded from “Apple App Store” or from “Google Play Store” and installed to your Pad or Smartphone.You can also scan this QR code to download directly.

➢ Connect of Camera and Pad/Smartphone via WiFi

1. Download and install the "GcamPro" APP on the mobile phone in the app store and turn on the Bluetooth and WIFI functions on the mobile phone.
2. Switch the power button of camera from "OFF" to "ON".
3. After the 15 seconds countdown finishing, the camera enter sleep working mode.(if the camera is already under working mode, please ignore step 2 and step 3.)
4. Open the "GcamPro" APP and click the "Add Camera" button,

a new interface will pop up, please click the device you want to connect and click “+Add” to jump to the Bluetooth list.If you find the Bluetooth hotspot of GcamPro and click it, will pop up"Send bluetooth instructions..." then will pop on "WIFI on please connect" and the WIFI list will pop up automatically. Find the WIFI hotspot with the name "GcamPro******" (if you could not

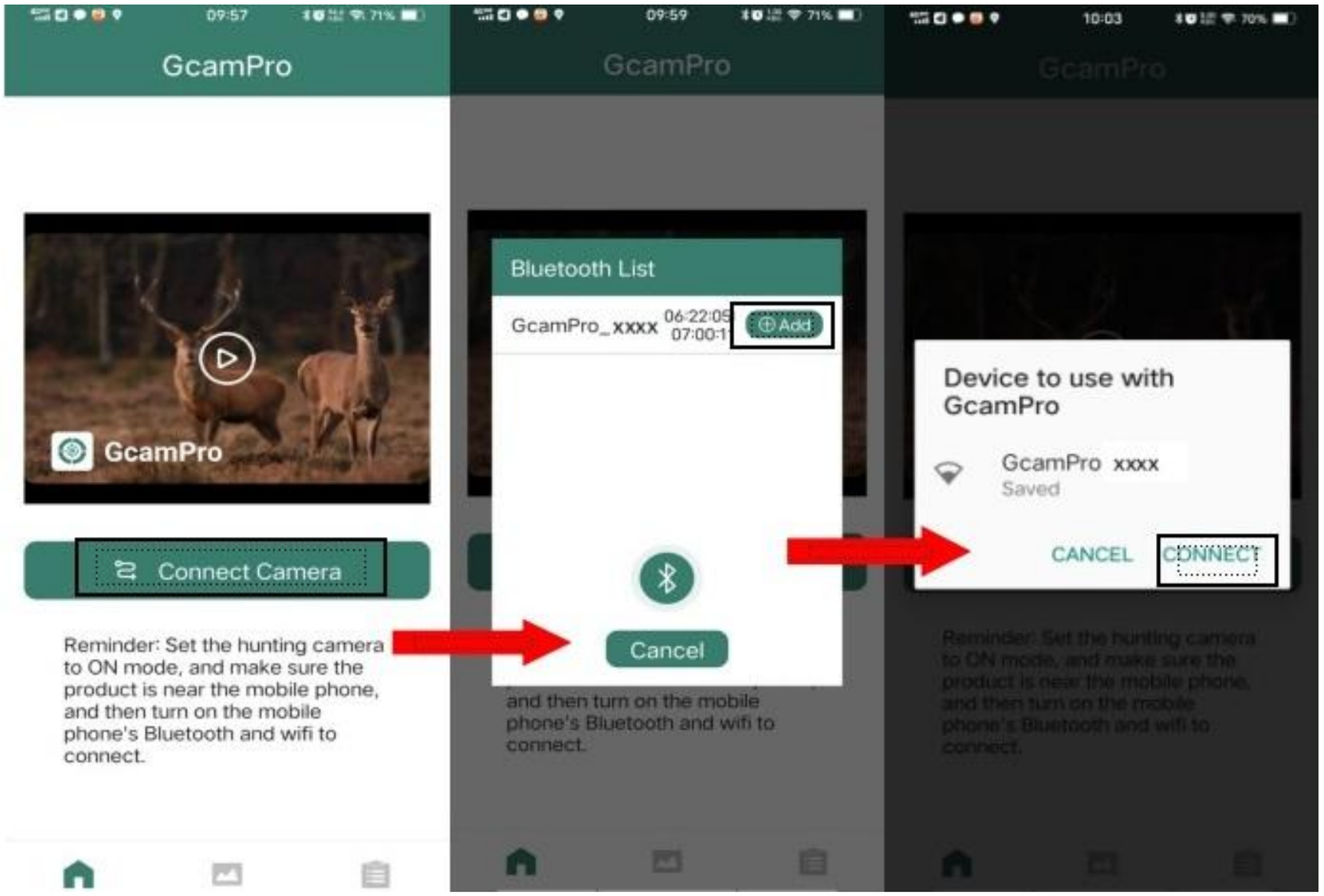

see this hotspot , please to wait or refresh), then enter the initial password "12345678" to enter the WIFI connection;

5. After WIFI connection is successful, please turn back to APP.Users can operate the corresponding functions in the APP (view files of the memory card, settings, device information preview, albums,etc.);

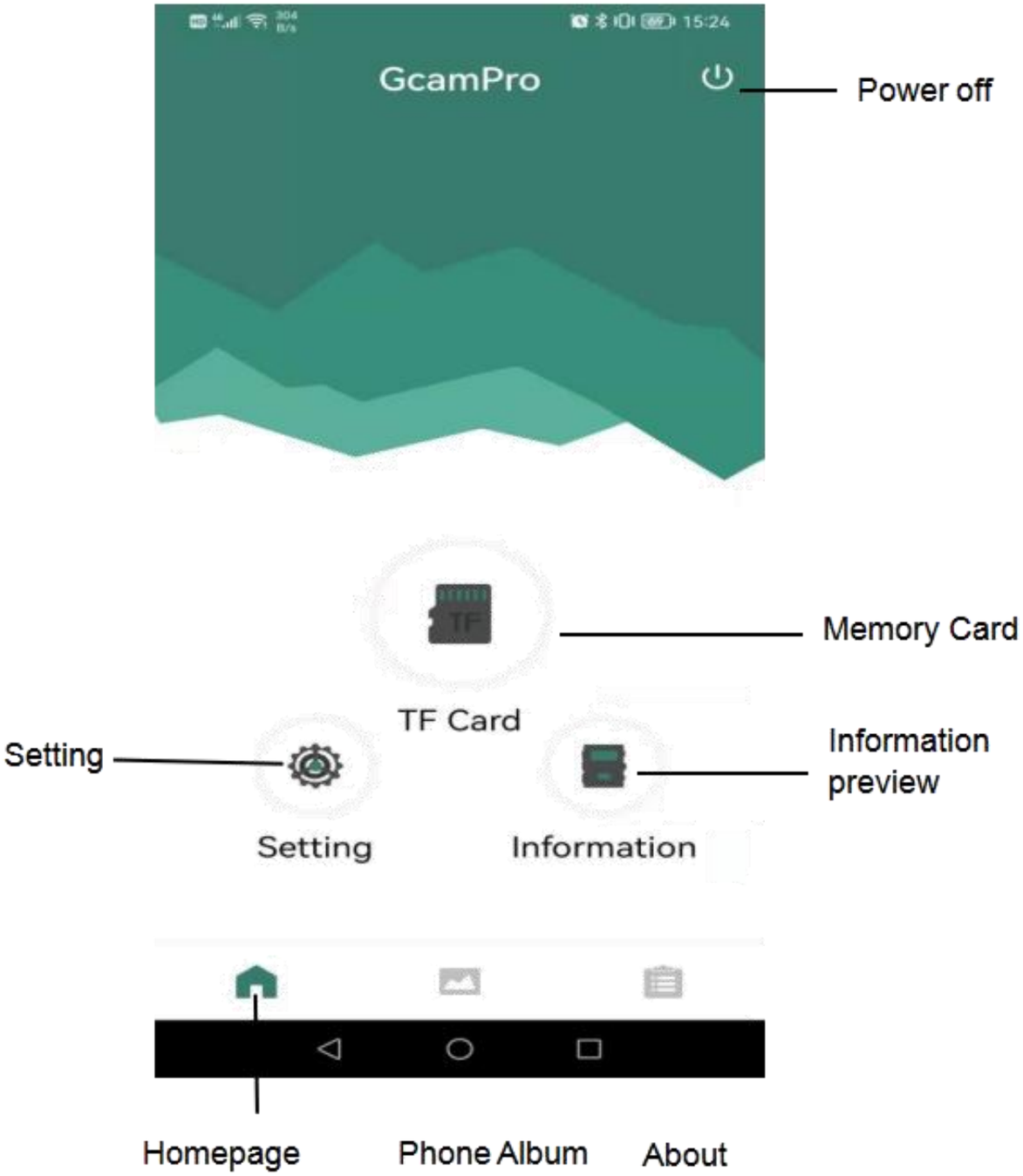

◆ Power button

Click the power button will prompt a confirmation:Is the camera turned off? Options:CANCEL/AGREE.

If you choice the agree,will exit WIFI connection and exit the APP, the device will enters the sleep hunting mode.

◆ Memory card button

Click memory card button, user will see the photo and video files stored in the memory card. Click the icon EDIT on the top right corner, then can choose the pictures or videos to download,delete or share the files,you also can select all.

◆ Setting button

Click Setting button, user will see the setup menu list of camera. Can set the parameters of camera on APP.

◆ Information preview button

Click information preview button, user will see the interface shown as below: Camera storage,Number of files and Battery.

User also can see the see real-time images from the camera. Click the refresh icon, can refresh image and can store the current image to your phone album.

Click the Album button to view the photo and video of the memory card.Click on the photo which you want to save to your phone. Click the icon EDIT on the top right corner, then can choose the pictures or videos to download, delete or share the files,you also can select all.

Click the Setting button,user will see the setup menu list of camera and can set the parameters of camera on APP.

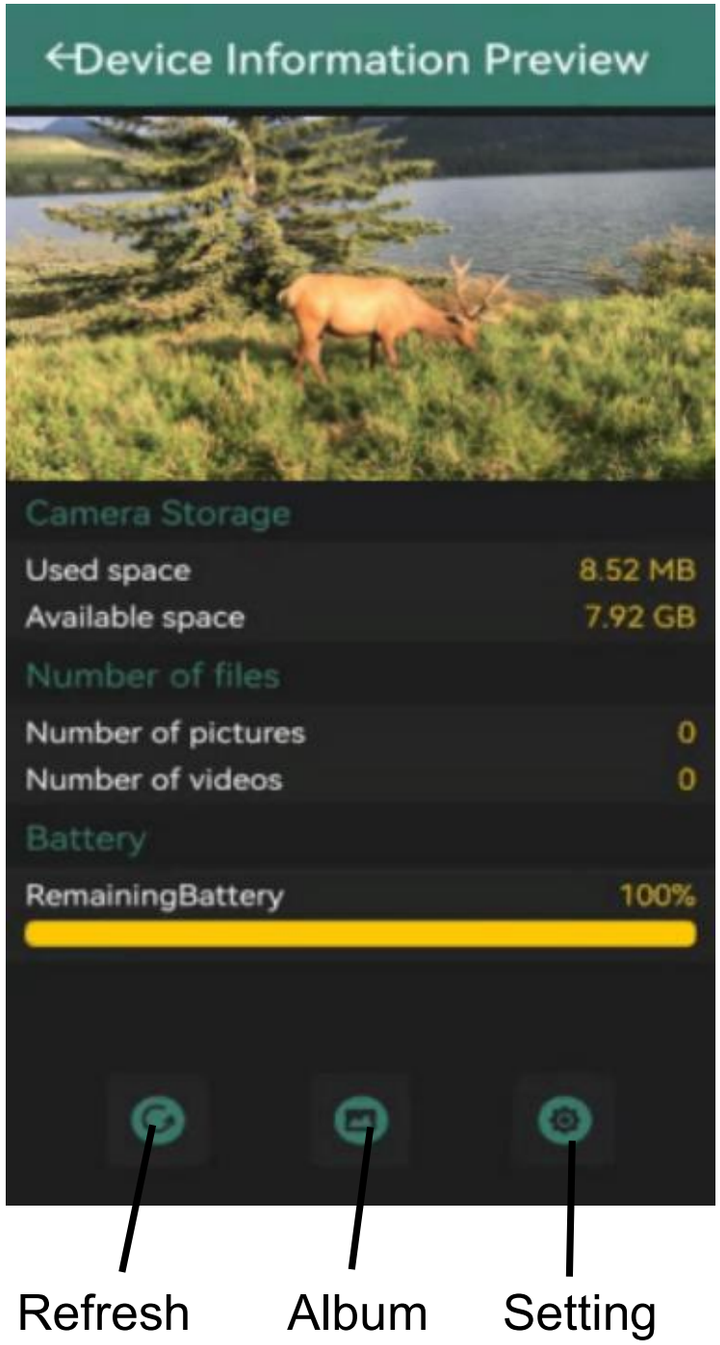

◆ Phone Album

User can review the photo and

video what have downloaded in the pad or smartphone album. Can zoom in image,
playback,choose, delete and share files.

6. After the APP operation is completed, return to the main interface, click the Power off button in the upper right corner to shut down and exit the WIFI connection, the device will enters the sleep-hunting mode.

Tips:

1.When connecting to WIFI, if the distance between the phone and the camera is closer, the WIFI signal will be stronger, the stability will be better, and the download speed will be faster;
2. After the operation of the APP, it is suggested to click the Power- off button in the upper right corner to shut down the APP. The camera will enter the sleep-hunting mode to save battery power;
3. When the product enters WIFI mode, if the mobile phone fails to connect WIFI after 3 minutes, the product will automatically

enter sleep-hunting mode;

4.When WIFI connection is successful. If there is no information interaction between the camera and the mobile phone, the camera will automatically disconnect after 3 minutes and enter the sleep-hunting mode.

5.After the device has been added to the APP, when opening the APP again, you only need to connect the camera, and then click the device to be connected, no need to add a network.

Download Files To The Computer

There are two ways to download files from the memory card to a computer:

By inserting the memory card into a card reader

By connecting the camera to a computer using the supplied USB cable.

➢ Using a Card Reader

1. Pop-up the memory card from the camera and insert it into a card reader.Then connect the card reader to a computer.

2. Open [My Computer] or [Windows Explorer] and double-click the removable disk icon that represents the memory card.

3. Copy image or video files from the memory card to your computer.

➢ Connecting the Camcorder to a PC by the USB Cable

1. Connect the camera to the computer via USB cable.Turn on the camera,the screen will display″ MSDC ″.

2. Open [My Computer] or [Windows Explorer]. A"Removable Disk" appears in the drive list. Double-click the "Removable Disk" icon to view its contents. All files are stored in the folder named ″ DCIM″ .

3. Copy the photos or files to your computer.

使用说明书

外形结构

1. 红外感应
2. 麦克风
3. 镜头
4. 主传感器
5. 外接电源孔
6. 辅传感器
7. 指示灯
8. TF 卡槽
9. USB 接口
10. 向左键/回放键
11. 开机-测试-关机档位开关
12. 向下/拍照模式键
13. 菜单键
14. 确认/快门键
15. 向右键
16. 向上/录像模式键
17. 扬声器
18. 显示屏

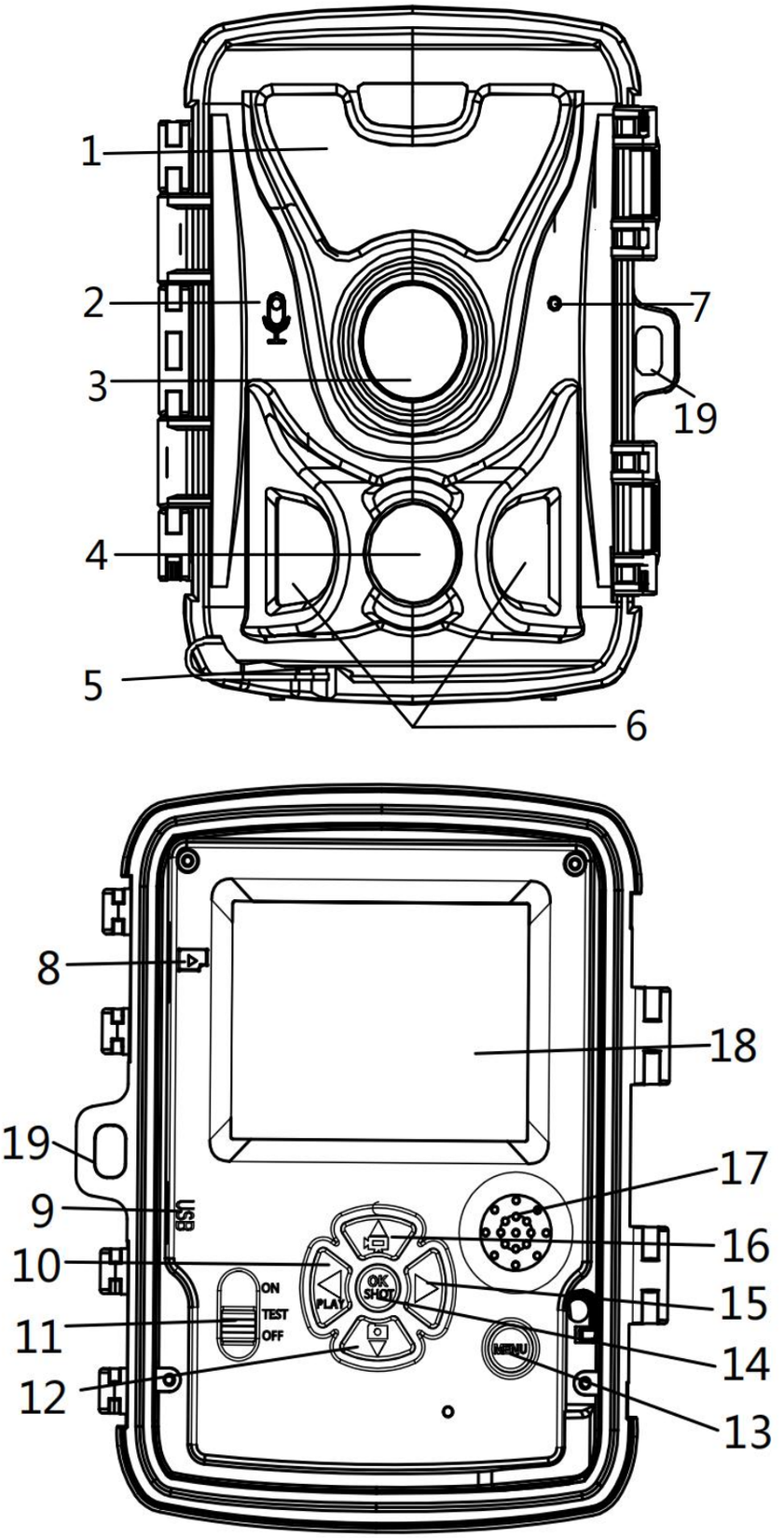

19. 锁扣

电池充电

使用本产品前，用户可根据需要进行选择电池充电或者 DC 供电。若选择电池供电，请先插入电池。本机器支持使用 1.5 V AA 电池和 3.7V 18650 锂电池。

♦ 若选择使用 1.5 V AA 电池时，请打开打猎机，找到电池仓，装入 4 节 1.5 V AA 电池。装入电池时候请确保电池极性方向正确。

♦ 若选择使用 3.7V 18650 锂电池时，请打开打猎机，找到对应电池仓，可装入 1~2 节 3.7V 18650 锂电池。装入电池时请确保电池极性方向正确。（可用 DC5V1.5A 以上的 USB 充电器对机器的 3.7V 18650 锂电池进行充电，充电时面壳的指示灯会亮红灯，充满红灯灭）

♦ 当使用 DC6V1.5A 以上电源适配器(不提供)充电时，在相机的底部找到橡胶密封圈并打开，用电源适配器的一端连接打猎机，另一端接入电源，进行供电。

插入内存卡

本产品没有内置内存,请在使用前，先准备一张 TF 卡。如果不插入存储卡，相机将不能保存任何数据。拍摄前，请先将 TF 卡格式化，可提高电池寿命和快门速度。

♦ 支持 TF 卡，最大容量为 512 GB。建议用户使用 6 级或以上的高速卡。

♦ 为了避免故障，储存卡应远离水源，避免强烈振动、粉尘、热源和
阳光直射。

♦ 不要强行插入存储卡，按照产品上标识的方向插入。

♦ 第一次使用时，应该待存储卡温度达到环境温度后再进行拍摄。打猎机可能会受到环境温湿度的影响而导致短路 ,所以在室外使用时应注意对产品的保护。

♦ 当存储卡空间已满时，摄像机将会自动停止拍照、录像。

♦ 拔出 TF 卡时，轻轻按下卡的突出边缘，弹出存储卡。

基本操作

➢ 开关机

插入电池或者接入电源后，将模式开关拨到“测试”/“开机”档位，开机。开机后进入电池类型选择界面：1.5V 碱性电池/3.7V 锂电池，按上下键选择对应电池，按 OK 键确认。
将模式开关拨到“关闭”档位，摄像机关机。

➢ 系统设置

将模式开关拨到“测试”档位，可对摄像机进行设置操作。
1. 按菜单键打开设置菜单。
2. 按上/下键浏览菜单。按确认键打开选项界面。
3. 按上/下键浏览选项。按确认键确认设置。
4. 再次按菜单键返回上一级或退出设置。

设置菜单及功能如下：

工作模式

设置摄像机工作时的模式。拍照模式下摄像机只拍摄图片。录像模式下摄像机录制视频。拍照&录像模式下，摄像机会先拍摄一张图片，然后开始录像。选项：【拍照】/【录像】/【拍照&录像】。

照片分辨率

设置静止图片的分辨率。

选项：【20MP(6144x3456P)】/【16MP(5376x3024P)】/【12MP(4608x2592P)】/【8MP(3840x2160P)】/【5MP (3072 x1728P)】/【3MP(2304x1296P)】/【1MP(1280x720P)】.

连续拍照

设置相机连续拍照数量。拍照模式下，相机会连续自动拍摄相应张数的照片。

选项：【拍照 1 张】/【连续拍照 2 张】/【连续拍照 3 张】/【连续拍照 10 张】。

录像分辨率

设置视频分辨率。分辨率越高，能够存储的视频时长越短，反之越长。选项：【1920x1080P】/【1280x720P】/【848x480P】/【720x480P】/【640x480P】/【320x240P】.

缩时录像分辨率

设置缩时录像的分辨率。

选项:【8MP(3840x2160P)】/【5MP (3072 x1728P)】/【3MP(2304x1296P)】.

录像长度

设置录制一段视频的时间长度。最短为 3 秒，最长为 2 分钟。
选项：3 秒~2 分钟。

录音

设置录像时是否同时录制声音。
选项：【开】/【关】。

移动感应推迟

设置相机感应到移动后，延迟拍摄的时间。在选定的时长内，相机不会记录任何图像或视频。以防止内存卡存储太多同一事件，占用内存容量。
选项：5 秒~60 分钟。

移动感应灵敏度

设置传感器的灵敏度。在室内所受到的环境影响很小，应选择”高灵敏度“，在室外时，环境正常情况下选择“中灵敏度”，当外界环境对拍摄有很大影响时选择”低灵敏度“。温度也会影响到灵敏度。“高灵敏度”设置适用于温和环境，“低灵敏度”试用于寒冷

的环境中。选项：【低】/【中】/【高】。

监控时段

设置摄像机的监控时间，可设置相机录制的具体时间段。如图所示，可以设置摄像机录制的起始时间和结束时间。设置完成后，每天摄像机只会在设定的时间段内录制，其他时间处于待机状态。

选项：【开】/【关】。

监控时段 2

设置摄像机的监控时间，可设置相机录制的具体时间段。如图所示，可以设置摄像机录制的起始时间和结束时间。设置完成后，每天摄像机只会在设定的时间段内录制，其他时间处于待机状态。

选项：【开】/【关】。

定时拍照

此菜单下有三个选项。

【标准】：可设置摄像机的定时拍照间隔时间。例如，设置间隔时间为 1 小时，机器就会在每 1 小时拍摄一张照片。若想观察植物的开花过程，将机器放置 24 小时，就会有 24 张照片，开花的全过程即可记录下来。

【缩时录影】：可设置间隔时间。间隔时间可以从 1 秒-24 小时自行调节设定。例如，设定时间为 1 小时，机器每隔 1 小时自动定时拍一张照片。如放置 24 小时，即 1*24=24 张照片，最后机器会将这些照片自动合成一个录像文件。

【关】：关闭此功能。

语言

设置屏幕显示语言。选项 :[English]/[Deutsch]/[Dansk] /[Suomi] /[Svenska]/[Español]/[Français]/[Italiano]/[Nederlands] /[Portugués]/ [简体中文]/[繁体中文] /[日本语]

循环录像

开启循环录像功能，机器将循环录制视频。

选项：【开】/【关】。

日期&时间

设置摄像机的日期和时间。

设置日期格式：日/月/年, 年/月/日，月/日/年。

设置时间格式：24 小时制，12 小时制。

按左/右键选择要修改的位置 ,按上/下键修改数值的大小,按 OK 键确认。

选项：【设定时间&日期】/【时间格式】/【日期格式】。

照片标记

设置是否在拍摄照片时，在照片上保留拍摄的日期&时间/日期。

选项：【时间&日期】/【日期】/【关】。

密码保护

设置摄像机的开机密码，密码为 4 位数，每位数可在 0-9 之间和 A-Z 之间选择。

如果忘记开机密码，可对摄像机进行复位操作，恢复到出厂默认设置。选项：【开】/【关】

WIFI 名称

可查看设备的 WIFI 名称。

WIFI 密码

设置和修改 WIFI 密码。由 8 位数组成，每个数在 0-9 和 A-Z 的大小写字母字母之间选择。

提示音

打开/关闭按键声音。

选项：【开】/【关】。

格式化记忆卡

格式化存储卡将永久删除存储卡内的所有数据。当你使用一个新的存储卡或使用的存储卡曾被用于另一个设备时，应先将存储卡格式化。

选项：【是】/【否】。

系列号

为摄像机设置一个唯一的系列号，系列号为 4 位数，每位数可在 0-9 之间和 A-Z 之间选择。

选项：【开】/【关】。

恢复设置

将摄像机所有的设置都恢复到出厂时的默认设置。包括设置的密码、序列号等。

选项：【是】/【否】。

版本

查看摄像机固件版本信息。

➢ 拍照、录影、回放

将模式开关拨到“测试”档位。可手动进行拍照、录影以及回放录制的文件。

♦ 拍照：按拍照键切换至拍照模式。按快门键拍摄一张照片。

♦ 录像：按录像键切换至摄像模式。按快门键开始录像，再次按快门键停止录像。

♦ 回放：按回放键进入回放界面，按上/下键浏览已保存的照片和视频。回放视频时，按确认键播放，再次按确认键暂停，按菜单键停止播放。再次按下回放键退出回放模式。

回放下菜单：

1）删除当前文档：删除当前照片或视频。选项：【取消】/【删除】。

2）删除所有文档：删除卡内全部文件。选项：【取消】/【删除】。
3）幻灯片展示：以幻灯片方式自动播放存储卡中的照片，每张照片显示 3 秒，按确认键停止幻灯片播放。
4）写入保护：锁定文件，以防文件被意外删除。选项：【当前文档防写】/【所有文档防写】/【解除当前文档防写】/【解除所有文档防写】。

➢ 工作模式

将模式开关拨到“开机”档位。机器开机后，屏幕上显示倒计时 15 秒后，屏幕将会熄灭，摄像机开始独立运作并进入待机模式。此时若有动物进入了传感器的检测范围，摄像机将被激活并检测运动轨迹。如果物体继续向传感器检测的区域移动，摄像机将自动进行拍照或摄像。如果物体离开了传感器检测的区域，摄像机回到待机模式。

➢ 夜间模式

在夜间模式下，所拍摄的画面只能显示黑色或白色。当长时间记录

视频时，低电压可能对机器的稳定性有很大的影响。所以在夜间低电压情况下,不要录制视频。

安装支架

你可以使用附带的支架将摄像机安装在墙上或树上。安装时要确保所有的螺丝被拧紧，安装的最佳高度为离地面 1 米左右。

元件

1. 三脚架螺杆
2. 锁紧螺母
3. 枢轴螺栓
4. 固定孔
5. 六角螺栓
6. 墙式插座
7. 螺丝

工具

- 钻孔机
- 6 毫米钻头
- 十字螺丝刀

警告

♦ 确保安装位置没有电缆，水或暖气管等经过。

♦ 提供的墙式插座只适合安装在混凝土或石头墙上。在开始安装之前,请检查安装位置是否适用此插座。如果有疑问，请咨询专业人员。

安装步骤

♦ 使用钻孔机在所需的安装位置打出安装孔。

♦ 用 6 毫米钻头钻出合适的洞，并插入墙式插座。

♦ 用螺丝固定支架。

♦ 拧紧三脚架螺杆和枢轴螺栓。

♦ 调整摄像机的方向，并用螺母锁定。

♦ 移动摄像机到最终位置，稍微拧松枢轴螺栓，将摄像机的位置调

整好后，再次拧紧枢轴螺栓固定。

➢ 通过手机 App/ Wi-Fi 连接远程控制

这款相机可以通过平板电脑或者智能手机远程操作几乎所有功能。在远程控制本设备之前，需要从“Apple APP Store”或“谷歌 Play Store”下载一个名为“GcamPro”的应用程序，并安装到您的 Pad 或智能手机上。也可以直接扫描二维码下载。

➢ 通过蓝牙启动 WiFi 连接相机和 Pad/智能手机

1．在应用商店中下载并安装“ GcamPro” APP 到手机/Pad 上，并开启手机上的蓝牙和 WIFI 功能。

2．将相机的按钮从“ OFF”切换到“ ON”。

3．倒计时 15 秒后，照相机进入睡眠工作模式。（如果照相机已经处于工作模式，则可以忽略步骤 2 和步骤 3）。

4．打开“ GcamPro” APP，然后点击击“添加相机”按钮。将弹出新界面跳到蓝牙列表，找到 GcamPro_XXXX 的蓝牙热点并

点击添加，会出现提示输入密码，然后输入原始密码“12345678”进入连接中，机器屏幕亮一下，当跳出如下界面点击连接后进入WIFI 连接;

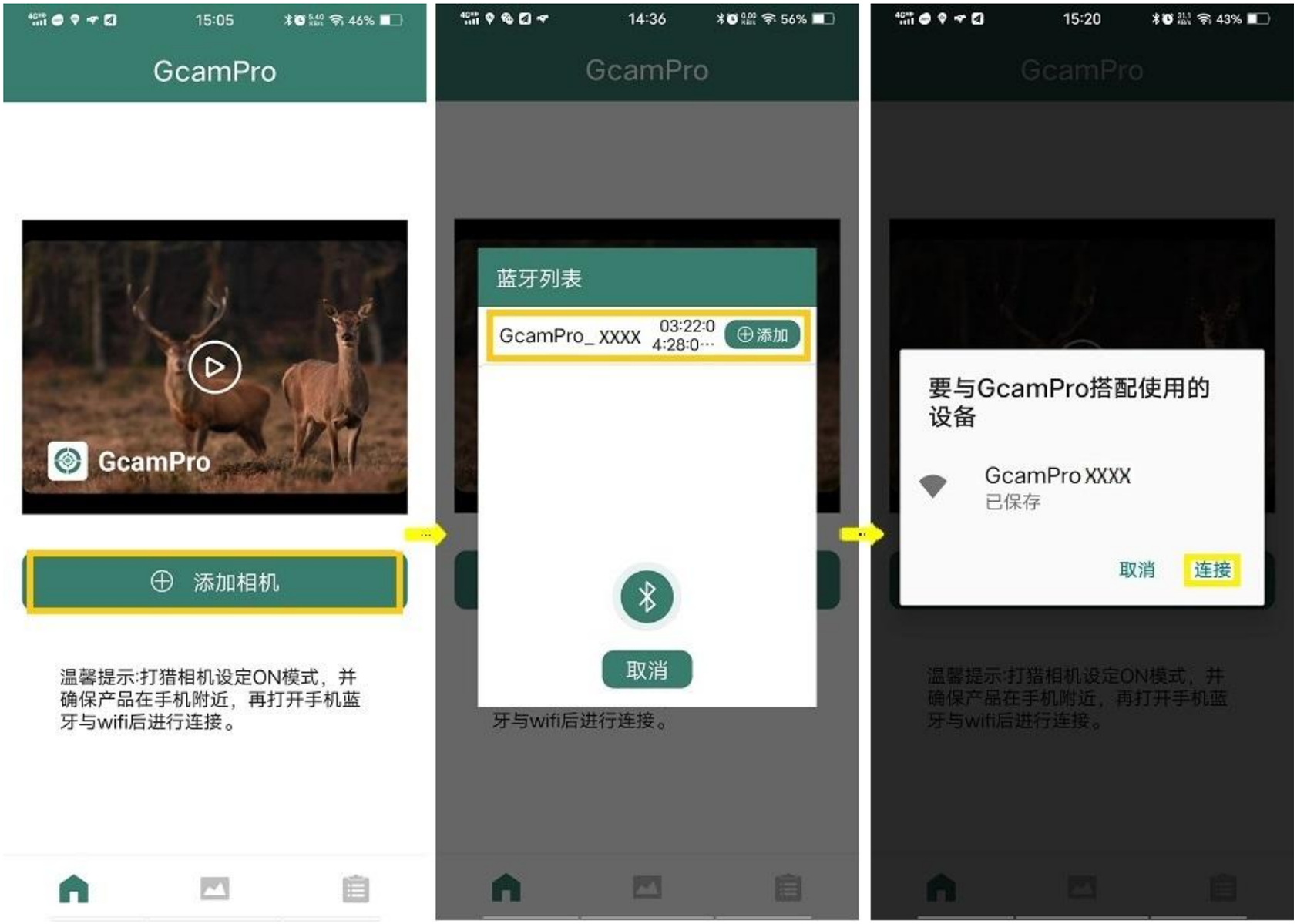

5．WIFI 热点连接成功后，返回到 APP 界面，可进行 APP 内的相应功能操作（查看 TF 卡内的文件、设置、设备信息预览、相册等）；

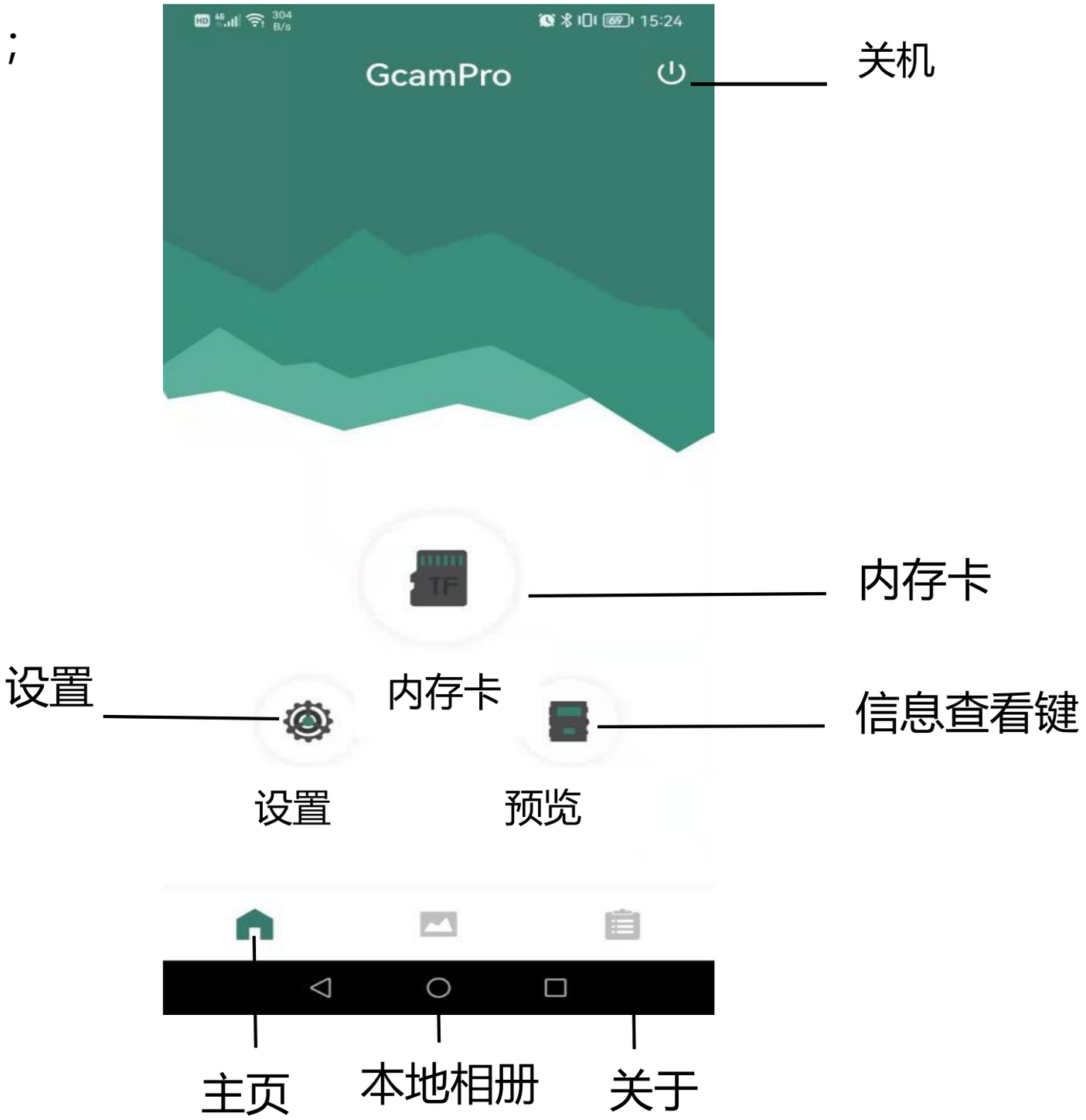

◆ 关机

点击关机键会出现一个确认提示：是否关闭相机？选项：取消/确认。若点击确认，进行关机（退出 WIFI 连接），退出 APP，产品进入睡眠打猎模式。

◆ 内存卡

点击内存卡键，用户将看到以下界面显示存储在 TF 卡的照片和视频文件。点击右上角的图标可进行编辑，可选择图片或视频下载或删除文件，也可以全选。

◆ 设置

点击设置键，用户可以看到相机设置菜单列表。可以在 APP 上设置摄像头参数。

◆ 预览

点击预览即信息查看键，用户将看到下面界面显示的相机存储信息，文件数量和电量。用户还可以看到当前的图像观看相机。

点击刷新图标，可以刷新图像，并将当前图像存储在手机相册中。

点击图片键可以查看内存卡的图片和视频，点击想保存到手机相册的图片就可以保存到手机。点击设置图片，用户可以看到相机设置菜单列表。可以在 APP 上设置摄像头参数。

◆ 本地相册

用户可以查看 pad 或手机相册中下载的照片和视频文件。可以放大图像，回放、选择、删除、共享文件。

6．APP 操作设定完成后，返回到主界面，点击右上角的关机按钮进行关机（退出 WIFI 连接），退出 APP，产品进入睡眠打猎模式。

➢ **温馨提示**

1．连接 WIFI 时，若手机与产品的距离越近，WIFI 信号会越强，稳定性会越好，下载速度会越快；

2．如 APP 操作完毕，建议点击右上角的关机按钮进行关机，产品进入睡眠打猎模式，节省电池电量；

3．当产品进入 WIFI 模式，如手机在 3 分钟后没有去连接 WIFI，产品会自动进入睡眠打猎模式；

4．当 WIFI 连接成功，如产品与手机没有任何信息交互， 3 分钟后产品自动断开连接，进入睡眠打猎模式。

5．APP 已添加设备后，重新打开 APP 时，只需链接相机，然后点击需要链接的机器，无需再添加网络。

下载文件到电脑

有两种方法可以将图像从摄像机的存储卡下载到计算机中：

- 将 TF 卡插入闪存读卡器中
- 用附带的 USB 线将摄像机和电脑相连。

➢ 使用读卡器

1. 从摄像机中弹出存储卡然后将其插入到电脑的读卡器中。

2. 打开[我的电脑]或 windows 资源管理器，然后双击代表存储卡的可移动图标。

3. 将图像从存储卡上复制到计算机中你选择的目录下。

➢ 通过 USB 线将摄像机连接到计算机

1. 通过 USB 线将摄像机连接到计算机，开启摄像机。液晶屏上显示 ” MSDC “。

2. 打开[我的电脑]或 windows 资源管理器，然后双击代表存储卡的可移动图标。所有文件存储在一个名为 “DCIM” 的文件夹中。

3. 将图像从 “DCIM” 文件夹中复制到计算机中你选择的目录下。

FCC WARNING

This device complies with part 15 of the FCC Rules. Operation is subject to the following two conditions: (1) this device may not cause harmful interference, and (2) this device must accept any interference received, including interference that may cause undesired operation.

Any changes or modifications not expressly approved by the party responsible for compliance could void the user's authority to operate the equipment.

NOTE: This equipment has been tested and found to comply with the limits for a Class B digital device, pursuant to Part 15 of the FCC Rules. These limits are designed to provide reasonable protection against harmful interference in a residential installation. This equipment generates, uses and can radiate radio frequency energy and, if not installed and used in accordance with the instructions, may cause harmful interference to radio communications. However, there is no guarantee that interference will not occur in a particular installation.

If this equipment does cause harmful interference to radio or television reception, which can be determined by turning the equipment off and on, the user is encouraged to try to correct the interference by one or more of the following measures:

-- Reorient or relocate the receiving antenna.

-- Increase the separation between the equipment and receiver.

-- Connect the equipment into an outlet on a circuit different from that to which the receiver is connected.

-- Consult the dealer or an experienced radio/TV technician for help.

To maintain compliance with FCC’s RF Exposure guidelines, This equipment should be installed and operated with minimum distance between 20cm the radiator your body: Use only the supplied antenna.