QUICK START

1. Download the free **RecoverX app** on an iOS or Android device.
2. Place device directly on skin.

3. Fasten straps so the device is snug against the skin. See “Troubleshooting” if straps are not sized correctly.
4. Press the power button on the device. Status light will pulse green.

5. Open the **RecoverX app** and follow the onscreen instructions.

DEVICE

Contents:

- Contrast Knee Device
- Charger
- Extender Box
- Shortener Box
- Carrying Bag
- User Manual

Components:

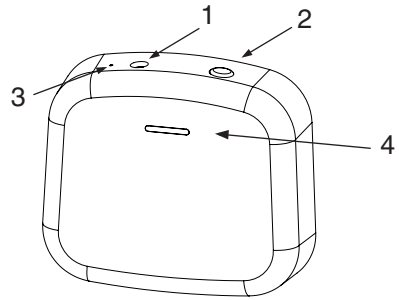

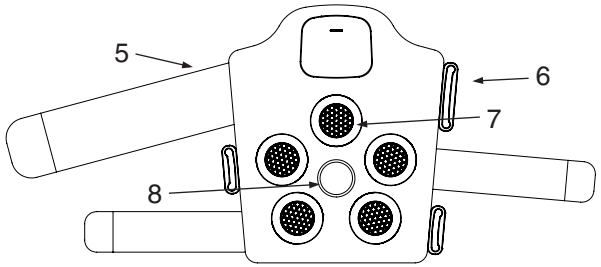

1	Charging port
2	Power button
3	Charging light
4	Status light
5	Straps
6	Loops
7	Modules
8	Kneecap ring

CHARGING

- Charging light red = charging.
- Charging light green = fully charged.
- Device can be run from battery power or while plugged into an outlet.

TROUBLESHOOTING

More troubleshooting found at www.recoverx.io/FAQ

I can’t start the device.

The device is controlled through the **RecoverX app**. Be sure to download the free app on your iOS or Android device.

The straps are too short.

Open the “Extender Box” and follow the instructions in the box.

The straps are too long.

Open the “Shortener Box” and follow the instructions in the box.

Device doesn’t get cold enough.

The device is sustaining optimum therapy temperatures, which is **NOT** ice cold.

Device isn’t responding.

Reset the device by plugging in the wall charger and holding the power button down for 10 seconds.

A NOTE ABOUT COLD THERAPY

Ice is too cold! Heat packs don't retain their heat! This has always been a problem because effective cold and heat therapy requires consistent, precise temperatures to be sustained over a set time. The RecoverX Contrast constantly regulates the temperature it delivers to ensure that the tissue stays in the optimal therapeutic range for the full session!

Try Cold therapy for...

- Recovering after strenuous activity.
- Reducing inflammation.
- Managing acute pain.

Try Heat therapy for...

- Warming up before exercise or activity.
- Relaxing after inflammation has gone down.
- Managing chronic pain or joint stiffness.

Try Contrast therapy for...

- Recovering after light activity.
- Recovering from strain injuries.
- Managing acute pain if cold therapy is too uncomfortable.

CONTACT

www.RecoverX.io
support@RecoverX.io

RecoverX, Inc.
3636 Camino Del Rio North
Suite 240
San Diego CA, 92108

Thank you for your support!

REGULATORY

FCC ID: 2AWOM-1040001
IC ID: 26209-1040001
HVIN: 104-0001

This device complies with part 15 of the FCC Rules and contains license-exempt transmitter(s)/receiver(s) that comply with Innovation, Science and Economic Development Canada's license exempt RSS(s). Operation is subject to the following two conditions: (1) This device may not cause harmful interference, and (2) this device must accept any interference received, including interference that may cause undesired operation.

Ce dispositif contient les émetteurs/récepteurs autoriser-exempts qui sont conformes au permis RSS exempt du Canada d'innovation, de la Science et de développement économique. L'opération est sujette aux deux conditions suivantes: (1) Ce dispositif peut ne pas causer l'interférence. (2) Ce dispositif doit accepter n'importe quelle interférence, y compris l'interférence qui peut causer le fonctionnement peu désiré du dispositif.

Innovation, Science and Economic Development Canada ICES 003 Compliance Label: CAN ICES-3 (B)/NMB-3(B)

Cet appareil numérique de classe B est conforme à la norme canadienne ICES-003.

NOTE: This equipment has been tested and found to comply with the limits for a Class B digital device, pursuant to part 15 of the FCC Rules. These limits are designed to provide reasonable protection against harmful interference in a residential installation. This equipment generates, uses and can radiate radio frequency energy and, if not installed and used in accordance with the instructions, may cause harmful interference to radio communications. However, there is no guarantee that interference will not occur in a particular installation. If this equipment does cause harmful interference to radio or television reception, which can be determined by turning the equipment off and on, the user is encouraged to try to correct the interference by one or more of the following measures: reorient or relocate the receiving antenna; increase the separation between the equipment and receiver; connect the equipment into an outlet on a circuit different from that to which the receiver is connected; consult the dealer or an experienced radio/TV technician for help.

RECOVERX

CONTRAST
knee

ATTENTION

- **Download the RecoverX app** to operate the device.
- **Do not block airflow to the fans.**
- Only clean with sanitation wipes as device is **not waterproof.**
- Only use for therapy, device does **not provide support or bracing** of the knee.