DM10x Controller

Datasheet Rev 1.05

- Controller for FCU, PTAC and other HVAC equipment
- 5 line-voltage relays
- Low voltage digital inputs and outputs
- Analog inputs and outputs
- NTC temperature probe inputs
- Built-in 802.15.4 radio
- Removable headers
- DIN-rail mounted
- Slim package for high density controller setup

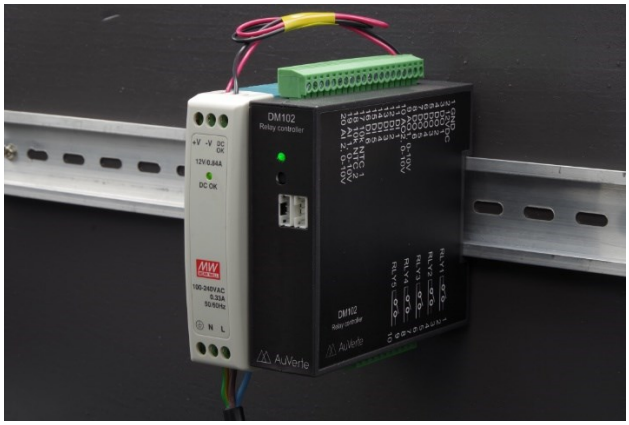

Contents

OVERVIEW **2**

APPLICATIONS **3**

DM101 Controlling a Fan Coil Unit 3
DM102 Controlling a Fan Coil Unit with Proportional Valves 4
DM10x Front-Side Bus as Low-Voltage I/O 5
DM10x Controlling Master Contactor Relay 6
DM10x Overcoming RF Limitations in Sheet Metal Housings 7

INSTALLATION **8**

DIAGNOSTICS **9**

SPECIFICATIONS **10**

User Interface 10
Radio 10
Software 10
Device 10
Environmental and Physical Specification 10
Relays 11
Digital Input 11
Digital Output 11
Analog Inputs 11
Analog Outputs 11
Temperature Probe Inputs 11
Bus Ports 11
Ordering Information 11

DIMENSIONS **12**

HEADER ASSIGNMENT **12**

DM101 HEADER ASSIGNMENT 12
DM102 HEADER ASSIGNMENT 12

Disclaimer: This document contains information that is the proprietary and confidential property of AuVerte. By acceptance hereof, each recipient agrees to use the information contained herein only for the purpose anticipated by AuVerte, and not to disclose to others, copy or reproduce, any part hereof without the written consent of AuVerte. The recipient agrees to return this document to AuVerte immediately upon request.

Overview

The DM10x is a high-density DIN-rail mounted controller assembly. It is designed for room automation systems and is used in several different application situations. Common applications are the control of HVAC systems, such as Fan Coil Units (FCU) or Packaged Air Conditioning (PTAC).

The controller is powered with 12VDC from an external power supply. For load control, five built-in relays can directly control line-voltage loads and there is full galvanic decoupling of the low voltage side from the line-voltage side.

The controller features pluggable headers for a simplified maintenance should equipment have to be exchanged during the operating phase.

The DM101 is a basic controller with just the five relays while the DM102 contains an array of low-voltage digital and analog inputs and outputs to support more advanced application scenarios.

For networking, the DM10x controllers can daisy chained with other controllers that are part of a load center. Further, the DM10x has a built-in Rf radio for direct communication with other room automation system components.

Applications

DM101 Controlling a Fan Coil Unit

The diagram below shows a basic configuration for controlling a fan coil unit (FCU). The five relays do not share any commons which means that each of the five loads is controlled galvanically decoupled. If for example the heating and cooling valve use the same power, then these power signals have to be wired together externally to the DM10x controller.

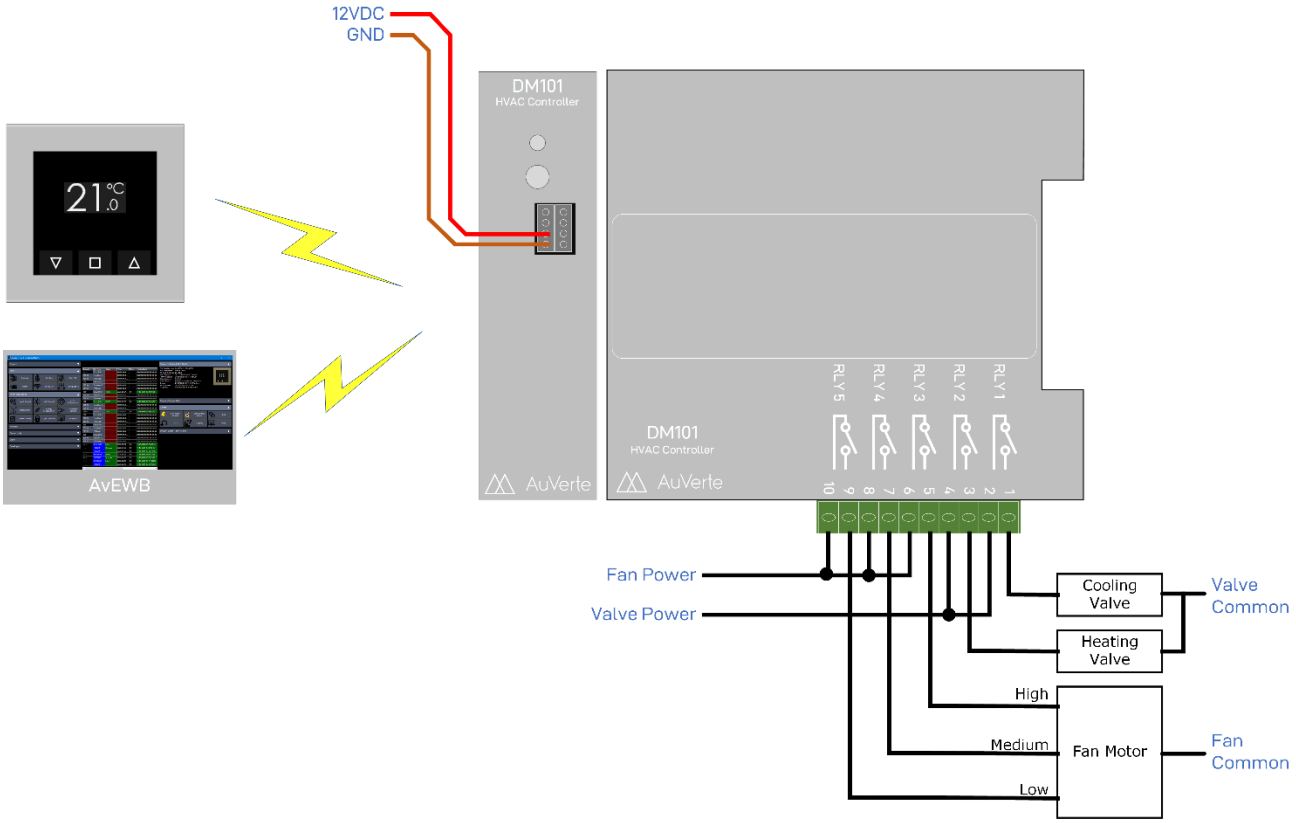

DM102 Controlling a Fan Coil Unit with Proportional Valves

In the diagram below, we see a more elaborate HVAC control schema that utilizes the DM102. In this sample application, three relays are allocated to drive the fan motor of a FCU. A fourth relay is used to engage a secondary heat. The primary heating and cooling valves are based on a 0-10V analog signal and driven by the analog outputs of the DM102. An additional return-air temperature sensor in the form of a 10k NTC probe is attached to provide the control algorithm with a reading of the return air temperature.

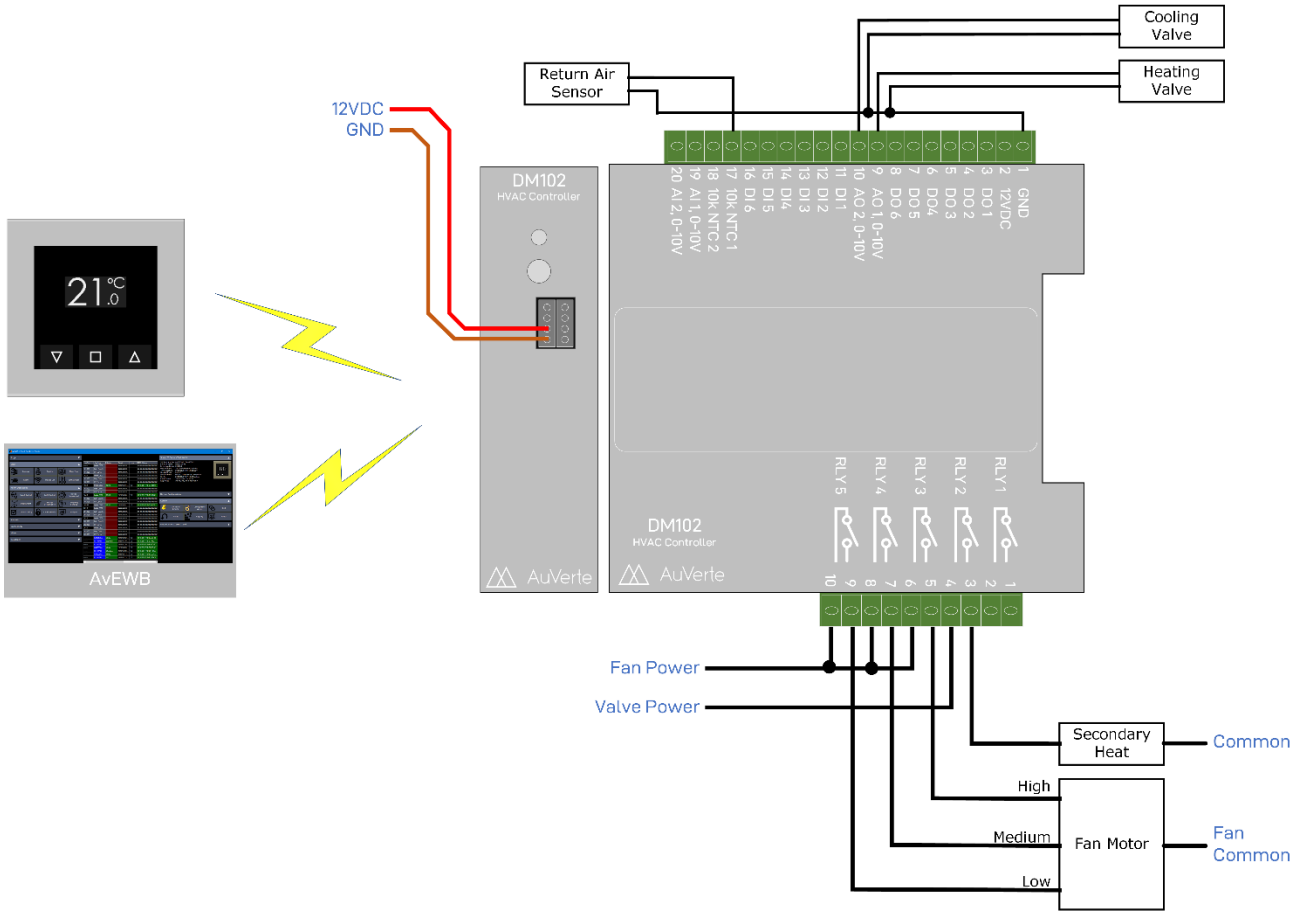

DM10x Front-Side Bus as Low-Voltage I/O

When configured correspondingly, the two four-pin bus headers can be used as additional low-voltage I/Os. Each port can be individually configured to either act as a communication bus or as a digital I/O. When configured as a digital I/O, each header features one digital input and one digital output.

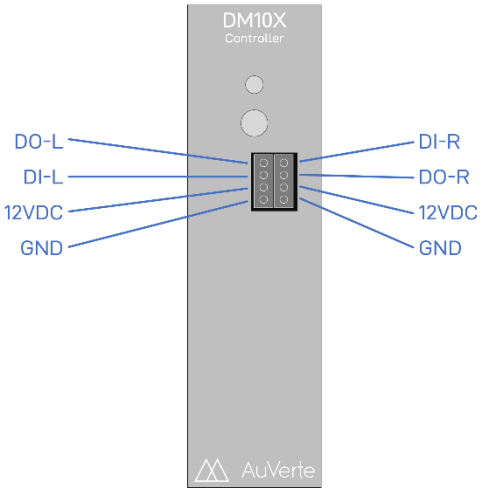

The figure below shows an example how the front-side I/Os can be used. The left digital output (DO-L) is used to drive a relay with a 12VDC coil. DO-L and DO-R both feature a free-run diode to avoid damaging the output when the relay is turned off. The right digital output (DO-R) is driving directly an LED. Both outputs feature a current setting capability that run 1mA through the pushed output. This avoids that the LED will require an external current limiting resistor.

The digital inputs (DI-L, DI-R) are connected to each a dry-contact input. This could be a momentary pushbutton or a toggle switch.

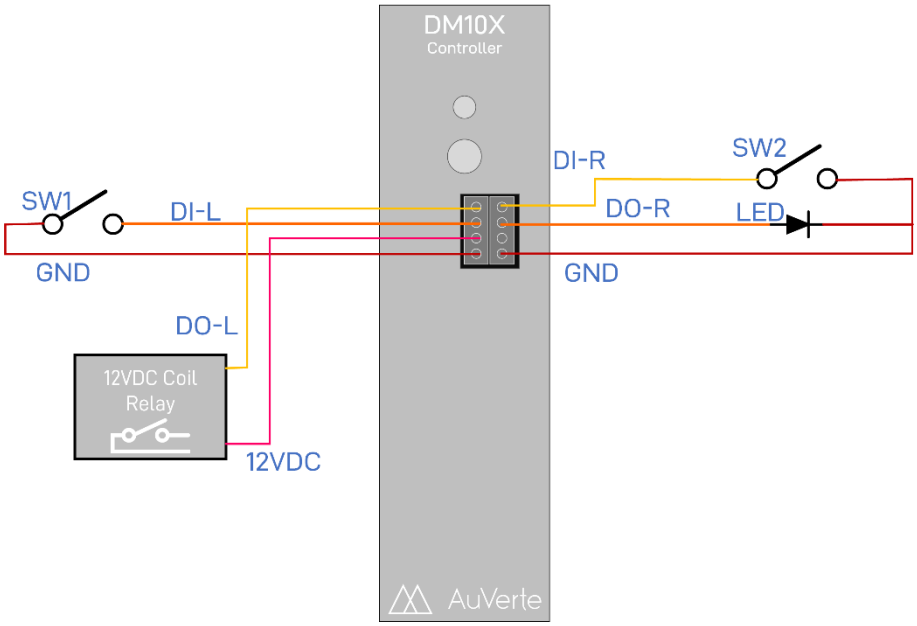

DM10x Controlling Master Contactor Relay

If the signals on the right-side front connector are not otherwise used, then a master contactor relay coil can be directly operated by the DM101. To enable this feature, the function needs to be engaged as part of the device configuration. The DM10x can directly drive a 12VDC coil up and has all the necessary protection circuits built in.

This master relay will be under software control and typically be engaged when the room is occupied. In this case, all outlets and loads that generally are not needed when the room is not occupied can be turned off when the occupant has left the space.

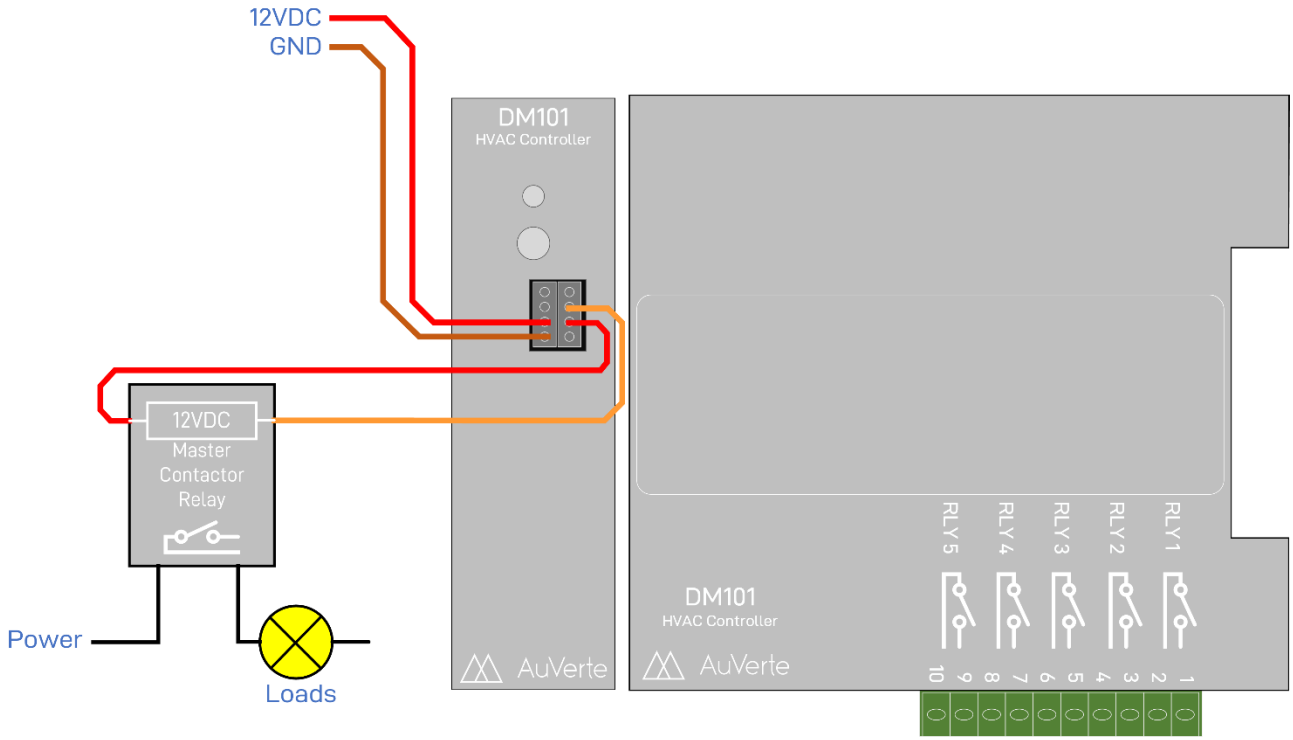

As an example, the chassis-mount T9AP1D52-12 by TE Connectivity Potter & Brumfield Relays can be used for such an application. The designer of such a deployment needs to assure that all local electrical code requirements have been met.

DM10x Overcoming Rf Limitations in Sheet Metal Housings

The Rf communication with the DM10x might be negatively impacted if the device is housed in a sheet metal enclosure. It can often be observed in real deployment that some Rf capabilities still exist, such as when the AvEWB laptop is brought into proximity to the enclosure. However, the Rf signal is significantly attenuated and a reliable communication with equipment a bit further away might be questionable. Any further signal attenuation, such as if a mesh network should be formed with equipment in other rooms, is typically not achievable any longer. To overcome this condition, the DM10x controller can use a RD102.RFB (Rf Bridge). This matchbox sized device will reside outside the sheet metal enclosure and will provide nominal Rf performance to the controllers inside the enclosure.

If multiple controllers reside inside the enclosure, only a single Rf bridge will be required. As the controllers inside the enclosure are daisy chained, they can share the Rf bridge resource.

The diagram below shows only the key elements pertaining to the Rf bridge. There is no impact on the I/O headers of the controllers.

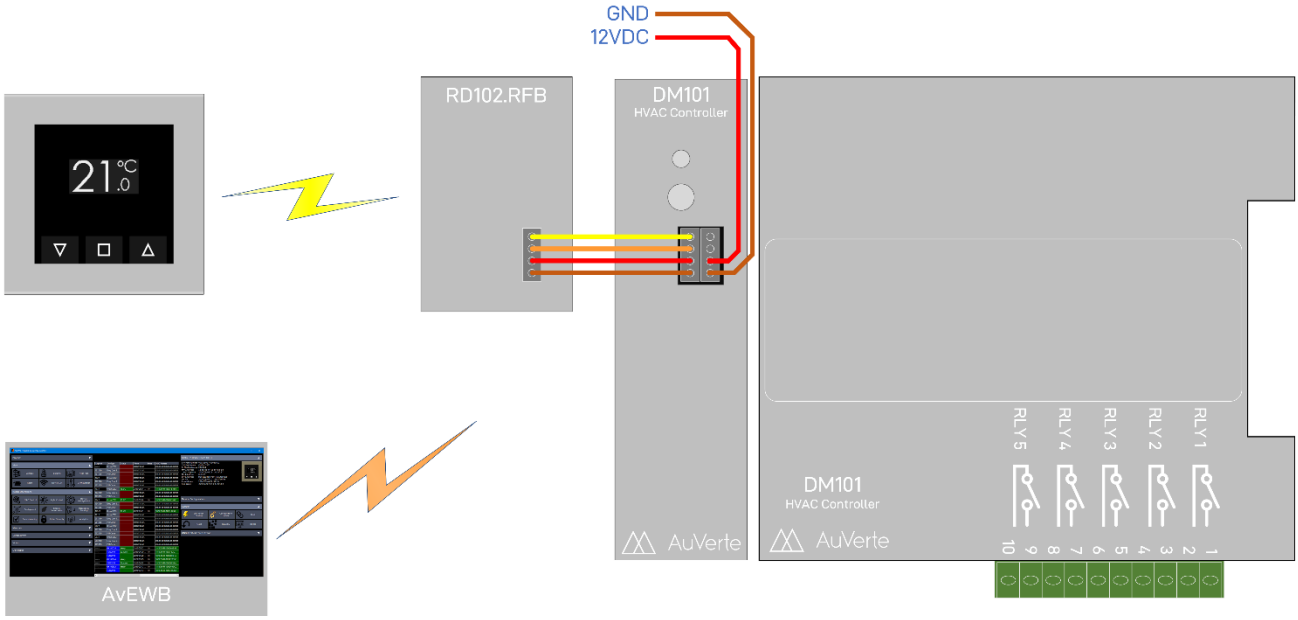

The image to the right shows how a number of daisy chained DM10x controllers use the RD102RFB device to provide communication capabilities when fully enclosed in a sheet metal housing.

The RD102RFB is the smaller black device to the left of the Meanwell power supply

Installation

The DM10x controller is mounted on a standard 35mm DIN rail. It features a clip that locks the product in place. All electrical connections are made through the pluggable terminals so that the product can be swapped out without requiring a full re-wiring of the device.

The product is onboarded with the AuVerte workbench software.

Diagnostics

The AvEWB features a built-in diagnostics capability that allows the user to monitor ongoing activities of the DM10x controller. This feature can be used to visualize the sensor and controls algorithms and how these signals are interfaced with the physical world.

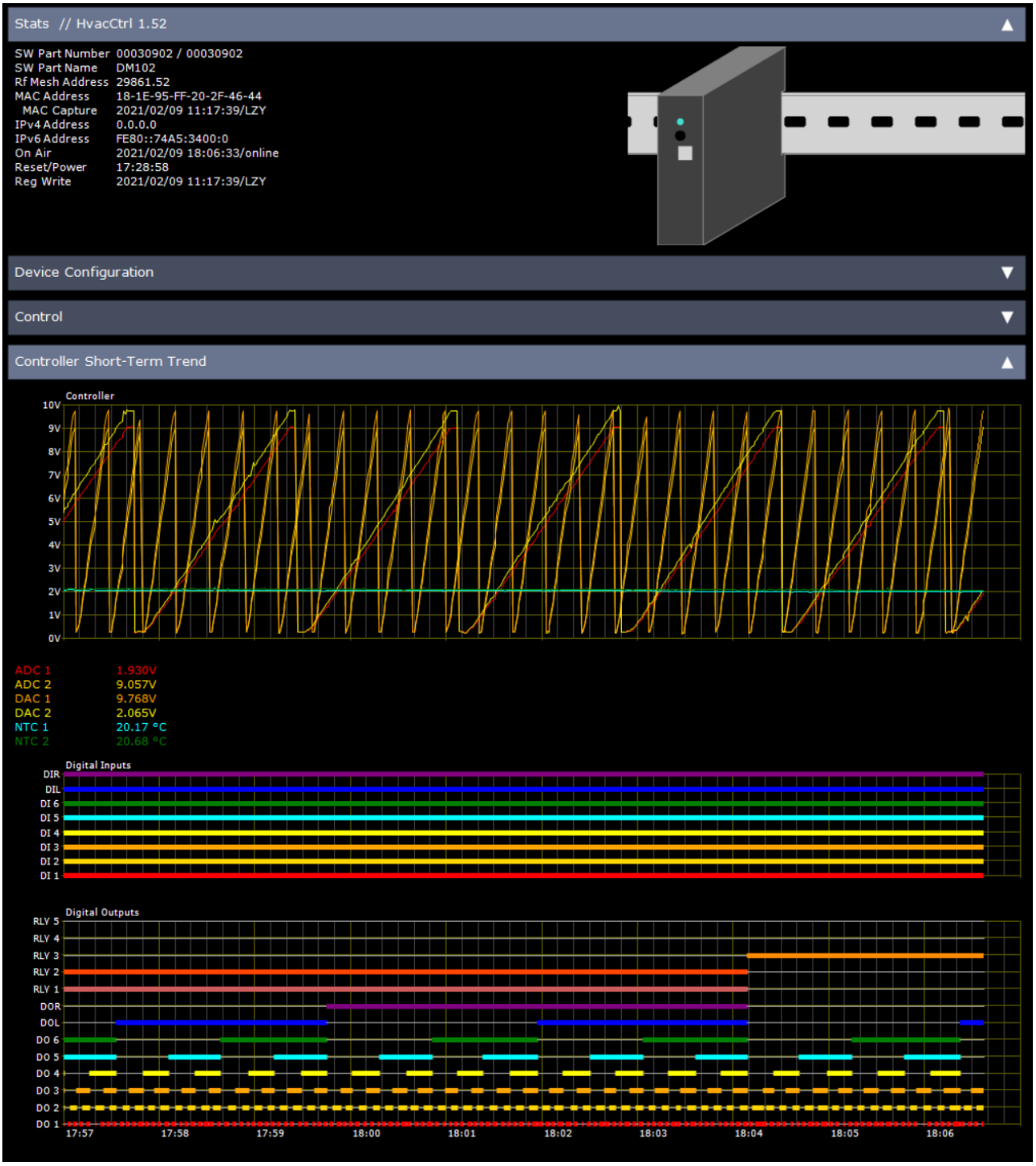

Specifications

User Interface

LED	RGB LED for status indication
Pushbutton	To trigger setup and diagnostic functions

Radio

Standard	IEEE 802.15.4
Frequency band	ISM 2.4 GHz
Interference immunity	DSSS (Direct sequence spread spectrum)
Data rate	250 kbps
Antenna	Built-in
Indoor range	Up to 50 m (150 ft)
Transmit power	+3 dBm
Receiver sensitivity	-95 dBm
Channels	16 (11 to 26, default 25)
Protocol	AuVerte mesh, IPv6 over 802.15.4 with forward error correction (FEC-ECC)

Software

IPv4	Not supported
IPv6	ICMPv6, IP, UDP, CoAP
Encryption	AES128
Hashing	SHA256, AES-CMAC
Key Exchange	ECDH
Routing	UDP – AuVerte mesh IPv6 – IPv6 over 802.15.4
App Security	DTLS
Cyber security	Packet authentication, packet inspection, certificate-based access control, configurable encryption keys with no backdoors , JTAG disabled Configurable port-based firewall

Device

Power	12VDC / 250mA
Mounting	DIN-rail mounted (35 rail)
Color	Dark gray

Environmental and Physical Specification

Dimensions	Without headers: 86mm x 95mm x 26mm With headers: 104mm x 95mm x 26mm
Weight	200g
Operating temperature	10 °C to 40 °C (50 °F to 104 °F)
Storage temperature	-20 °C to 50 °C (--4 °F to 122 °F)
Operating humidity	10 % to 95 %RH, non-condensing
Storage humidity	5 % to 90 %RH, non-condensing
Electromagnetic emissions	FCC Part 15C EN 62311 (EMR) ETSI EN 300 328 (2.5GHz ISM Band) ETSI EN 301489 (EMC)
Safety approvals	EN62368-1
Environmental	RoHS
Cleaning	Mild cleaning liquid, soft towel
Recycling	Repairable by AuVerte. Recycling limited to housing with most of the weight attributed to the electronics.
Safety	All termination and connection work to be performed when electrical power to the installation box is removed
Installation location	Electrical enclosures meeting local codes

Relays

Count / Type	5 SPST-NO, Form-A
Contact rating	Rated load: 240VAC 16A Max switching voltage: 277VAC Max switching capacity: 3500VA
Application design ratings	277VAC 10A per relay 5000VA for all five relays
Color	Dark gray

Digital Input

Count	0 (DM101), 6 (DM102)
Type	10kΩ pull-up to 12VDC
Actuation	External pull-down (dry contact, optocoupler, NPN transistor) with at least 2mA driving capability.
Activation threshold	Active: pull low to below 2VDC Inactive: release to above 8VDC

Digital Output

Count	0 (DM101), 6 (DM102)
Type	NPN pull-down transistors (to GND) with 1.2kΩ current protection resistor on emitter.
Typical applications	Driving of external LED (10mA at 12VDC) Driving of compatible digital inputs in other devices

Analog Inputs

Count	0 (DM101), 2 (DM102)
Type	0-10VDC
Input impedance	100kΩ
ADC Resolution	12 bits

Analog Outputs

Count	0 (DM101), 2 (DM102)
Type	0-10VDC
Drive capability	5mA
ADC Resolution	12 bits

Temperature Probe Inputs

Count	0 (DM101), 2 (DM102)
Type	10kΩ NTC
Temperature range	0° - 110°C
Accuracy	± 2°C

Bus Ports

Count	2
Typical application	Bus interface for daisy chaining controllers
Alternate application	One low-voltage digital input and one low-voltage digital output

Ordering Information

Part numbers	003044.DM101 , 003044.DM102
Package content	DM10x controller, screw terminals, short interconnect harness
Options	RD102RFB (external Rf bridge)
Power Supplies	Recommended power supplies: • Meanwell MDR-10-12 • Meanwell MDR-20-12 • Meanwell MDR-40-12 • Meanwell MDR-60-12 • Meanwell MDR-100-12

Dimensions

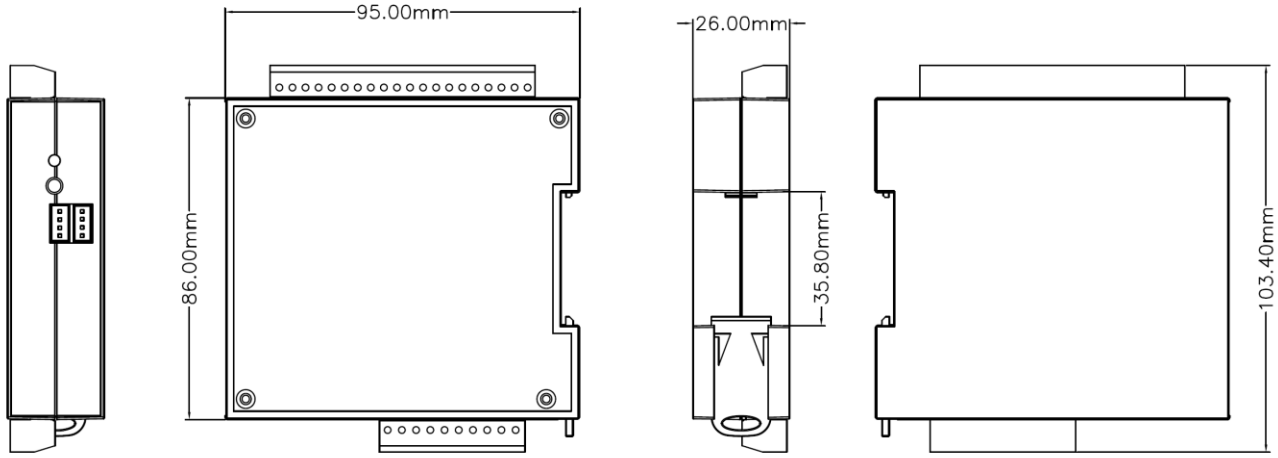

Header Assignment

DM101 Header Assignment

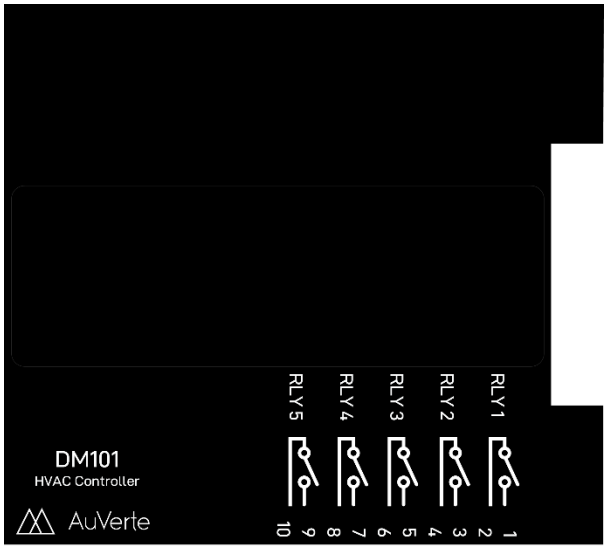

DM102 Header Assignment

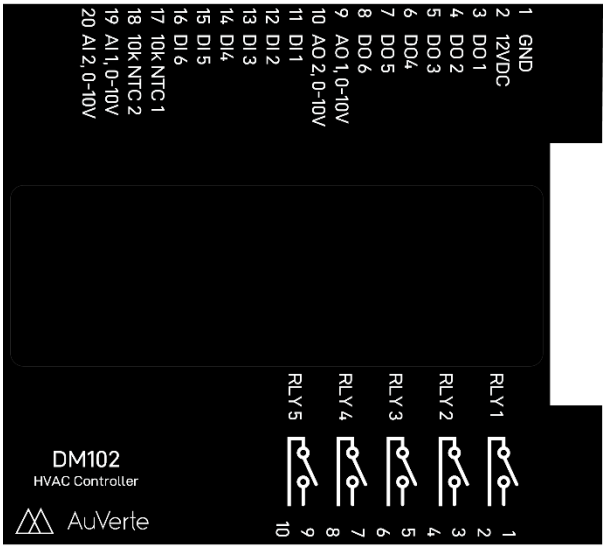

AuVerte AG
Rothusmatt 14
CH-6300 Zug
Switzerland
www.auverte.com

FCC Warning

This device complies with part 15 of the FCC Rules. Operation is subject to the following two conditions: (1) This device may not cause harmful interference, and (2) this device must accept any interference received, including interference that may cause undesired operation.

Any Changes or modifications not expressly approved by the party responsible for compliance could void the user's authority to operate the equipment.

Note: This equipment has been tested and found to comply with the limits for a Class B digital device, pursuant to part 15 of the FCC Rules. These limits are designed to provide reasonable protection against harmful interference in a residential installation. This equipment generates uses and can radiate radio frequency energy and, if not installed and used in accordance with the instructions, may cause harmful interference to radio communications. However, there is no guarantee that interference will not occur in a particular installation. If this equipment does cause harmful interference to radio or television reception, which can be determined by turning the equipment off and on, the user is encouraged to try to correct the interference by one or more of the following measures:

-Reorient or relocate the receiving antenna.

-Increase the separation between the equipment and receiver.

-Connect the equipment into an outlet on a circuit different from that to which the receiver is connected.

-Consult the dealer or an experienced radio/TV technician for help.

This equipment complies with FCC radiation exposure limits set forth for an uncontrolled environment. This equipment should be installed and operated with minimum distance 20cm between the radiator & your body.