AuVerte

SC801 SpiritCatcher Thermostat

Contents

OVERVIEW **2**

CHANGING BATTERY **3**

COMMISSIONING AND VERIFICATION **4**

SPECIFICATIONS **5**

User Interface 5
Temperature Sensor 5
Motion Detector 5
HVAC User Interface 5
Radio 5
Software 5
Device 6
Environmental and Physical Specification 6
Ordering Information 6

Disclaimer: This document contains information that is the proprietary and confidential property of AuVerte. By acceptance hereof, each recipient agrees to use the information contained herein only for the purpose anticipated by AuVerte, and not to disclose to others, copy or reproduce, any part hereof without the written consent of AuVerte. The recipient agrees to return this document to AuVerte immediately upon request.

Overview

The SC801 SpiritCatcher thermostat from AuVerte is part of a modern room automation solution. This thermostat has been designed for retrofitability where the cost of pulling wires for the installation of an EMS or room automation system is prohibitively expensive. The SC801 solves this by being a battery-powered wireless device that, in conjunction with long lasting batteries, creates a low total cost of ownership.

As the unit does not need to be wired into a controls solution, the device can be freely located where the building occupant accessibility, the temperature sensing performance and the motion detection performance, can be ideally balanced.

The use of this thermostat has been designed as such to be very easy on hotel guests. This is reflected by the fact that only three buttons are necessary to operate the HVAC equipment of the controlled space.

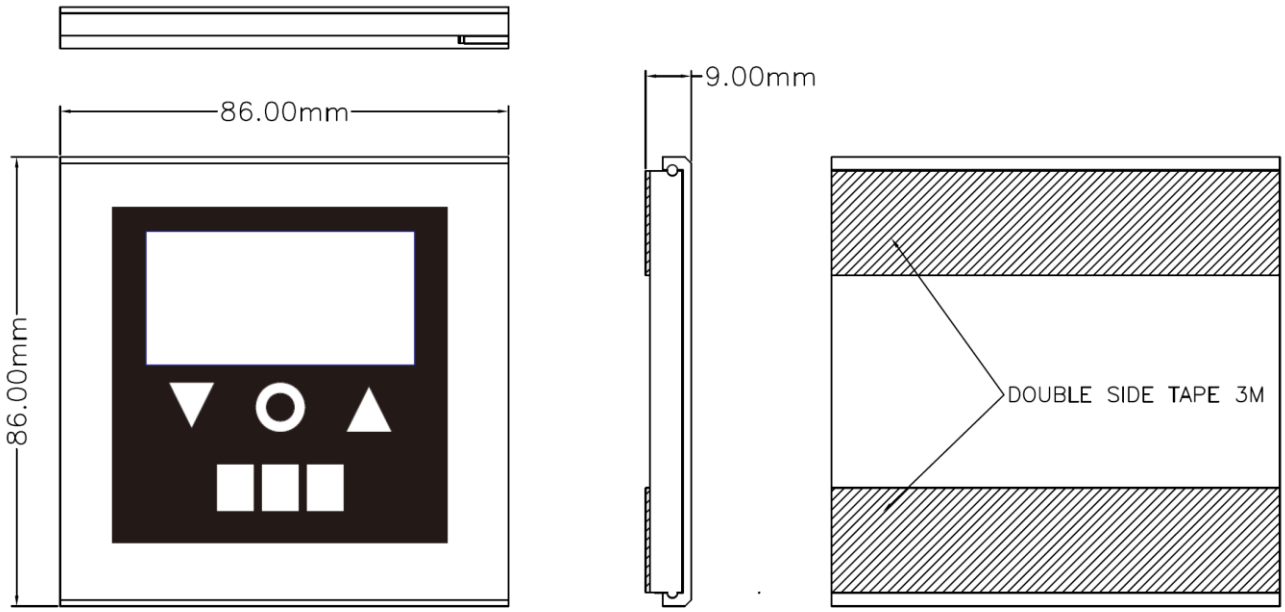

© AuVerte AG

Changing Battery

The CR2450 coin cell battery needs to be inserted as follows:

1. With a small pointy tool (small Philips screwdriver, pointy end of a paper clip), slide open the battery cover of the SC device.

2. The battery cover is now open.

3. Extract the battery with a magnet.

4. Insert the battery with the positive (+) terminal facing the wall.

5. Confirm the startup of the device.

© AuVerte AG

Commissioning and Verification

Follow the steps below to commission and verify the proper operation of an SC801 thermostat:

- △ In AvEWB, select the corresponding room where the device is located.
- △ Await the transmission of the next device status message that will be displayed in the AvEWB.

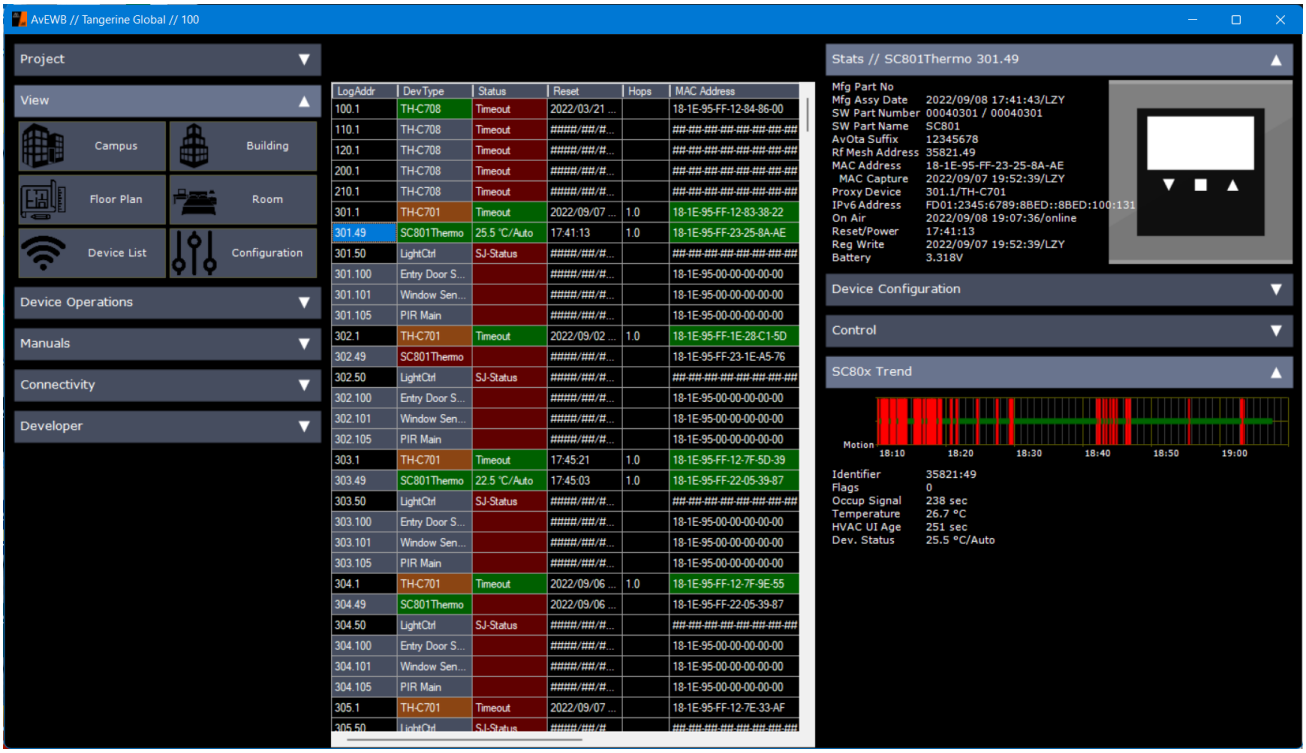

Review the following fields:

- △ Reset/Power date/time
- △ Battery voltage
- △ Plausible trend signal history
- △ Correctly measured room temperature
- △ Correct HVAC mode (On/Off, target temperature, fan speed)
- △ Correct housing color

© AuVerte AG

Specifications

User Interface

Display	ePaper, 250x128 pixels
Keys	Three capacitive touch sensors (up, mode, down)
Key enable, keyclick, and key function	Individually configurable
Keypad sensitivity	Configurable (0 – 15)
Temperature scale	Configurable °C / °F
Temperature steps	Configurable, full or half °C / °F

Temperature Sensor

Temperature sensor	10 °C to 35 °C, accuracy +/- 0.5 °C
Temperature offset	Configurable +/- 10.00 °C with 0.01 °C resolution
Temperature sampling interval	2 seconds
Temperature filtering	Delta-filter
Temperature reporting resolution	30 seconds

Motion Detector

Sensor type	Passive infrared (PIR) sensor
Coverage distance	7.5 meters
Coverage spread	120 degrees
Motion history	3600 seconds
Motion sampling interval	2 seconds
Motion reporting resolution	2 seconds
Motion assignment	Configurable to differentiate motion types and zones

HVAC User Interface

Display units	Configurable °C / °F
Target temperature resolution	Configurable 0.5 °C / °F or 1.0 °C / °F
Target temperature range	Configurable in host controller
Mode button	Configurable mode rotation: OFF – AUTO – LOW – MED – HIGH

Radio

Standard	IEEE 802.15.4
Frequency band	ISM 2.4 GHz
Interference immunity	DSSS (Direct sequence spread spectrum)
Data rate	250 kbps
Antenna	Built-in
Indoor range	Up to 50 m (150 ft)
Transmit power	+3 dBm
Receiver sensitivity	-95 dBm
Channels	16 (11 to 26, default 25)
Protocol	AuVerte mesh IPv6 over 802.15.4 with forward error correction (FEC-ECC) via proxy

Software

Encryption	AES128
Routing	UDP over AuVerte Rf mesh and through an IPv6 proxy device
Cyber security	Packet authentication, configurable encryption keys with no backdoors, JTAG disabled
MAC Address	18.1E.95.xx.xx.xx.xx.xx (IEEE assigned to AuVerte)
Firmware OTA	Software downloaded over-the-air during bind process

© AuVerte AG

Device

Power	CR2450 3V/620mAh coin-cell (not included) Approved battery vendors: • Panasonic • Mitsubishi • Murata Batteries and their cells shall comply with the relevant IEC standards for batteries as listed below: IEC 60086-4, IEC 60086-5, IEC 60896-11, IEC 60896-21, IEC 60896-22, IEC 61056-1, IEC 61056-2, IEC 61427, IEC/TS 61430, IEC 61434, IEC 61959, IEC 62133, IEC 62281 and IEC 62485-2. Note: Other battery safety standards are under development and are intended to be included in the future.
Battery life	5 years
Mounting	Surface mount, double-sided adhesive tape.
Cleaning	Mild cleaning liquid (moist, not wet), soft towel

Environmental and Physical Specification

Dimensions	86mm x 86mm x 9mm
Weight	0.065 kg, 2.22oz (incl. battery) 0.060 kg, 2.12oz (without battery)
Operating temperature	10 °C to 40 °C (50 °F to 104 °F)
Storage temperature	-20 °C to 50 °C (--4 °F to 122 °F)
Operating humidity	10 % to 95 %RH, non-condensing
Storage humidity	5 % to 90 %RH, non-condensing
Environmental light	Keep installed device from direct or strong exposure to sun and illumination devices.
Electromagnetic emissions	FCC Part 15C EN 62311 (EMR) ETSI EN 300 328 (2.5GHz ISM Band) ETSI EN 301489 (EMC)
Safety approvals	EN62368-1
Environmental	RoHS
Recycling weights	22g ABS, 3g polycarbonate, 17g aluminium, 18g electronics, 5g battery

Ordering Information

Part numbers	003007.SC801
Package content	3 SC801 Thermostats
Frame Material Options	• Plastic • Aluminium
Color Options	• Plastic: Black and White • Aluminium: See color specification
Options	Wireless temperature, humidity and motion sensors. Wireless door and window sensors. EM9xx HVAC controller DM10x HVAC controller RD101 HVAC split controller RD103ME Mitsubishi VRF controller

AuVerte AG
Rothusmatt 14
CH-6300 Zug
Switzerland
www.auverte.com

© AuVerte AG

FCC Warning

This device complies with part 15 of the FCC Rules. Operation is subject to the following two conditions: (1) This device may not cause harmful interference, and (2) this device must accept any interference received, including interference that may cause undesired operation.

Any Changes or modifications not expressly approved by the party responsible for compliance could void the user's authority to operate the equipment.

Note: This equipment has been tested and found to comply with the limits for a Class B digital device, pursuant to part 15 of the FCC Rules. These limits are designed to provide reasonable protection against harmful interference in a residential installation. This equipment generates uses and can radiate radio frequency energy and, if not installed and used in accordance with the instructions, may cause harmful interference to radio communications. However, there is no guarantee that interference will not occur in a particular installation. If this equipment does cause harmful interference to radio or television reception, which can be determined by turning the equipment off and on, the user is encouraged to try to correct the interference by one or more of the following measures:

-Reorient or relocate the receiving antenna.

-Increase the separation between the equipment and receiver.

-Connect the equipment into an outlet on a circuit different from that to which the receiver is connected.

-Consult the dealer or an experienced radio/TV technician for help.

The device has been evaluated to meet general RF exposure requirement. The device can be used in portable exposure condition without restriction.