# RADIO TEST REPORT
# FCC ID:2AWOZCTYV195A

**Product:** 19.5 Tablet
**Trade Mark:** CITYROW
**Model No.:** CTYV195A
**Family Model:** N/A
**Report No.:** S20060806002002
**Issue Date:** 15 Jul. 2020

**Prepared for**

CITYROW Holdings,Inc

1409 3rd Avenue New York, NY 10075

**Prepared by**

Shenzhen NTEK Testing Technology Co., Ltd.
1/F, Building E, Fenda Science Park, Sanwei Community,
Xixiang Street Bao'an District, Shenzhen 518126 P.R. China
Tel.: +86-755-6115 6588
Fax.: +86-755-6115 6599
Website:http://www.ntek.org.cn

# TABLE OF CONTENTS


**1 TEST RESULT CERTIFICATION ..... 3**

**2 SUMMARY OF TEST RESULTS ..... 4**

**3 FACILITIES AND ACCREDITATIONS ..... 5**

3.1 FACILITIES ..... 5
3.2 LABORATORY ACCREDITATIONS AND LISTINGS ..... 5
3.3 MEASUREMENT UNCERTAINTY ..... 5

**4 GENERAL DESCRIPTION OF EUT ..... 6**

**5 DESCRIPTION OF TEST MODES ..... 8**

**6 SETUP OF EQUIPMENT UNDER TEST ..... 9**

6.1 BLOCK DIAGRAM CONFIGURATION OF TEST SYSTEM ..... 9
6.2 SUPPORT EQUIPMENT ..... 10
6.3 EQUIPMENTS LIST FOR ALL TEST ITEMS ..... 11

**7 TEST REQUIREMENTS ..... 13**

7.1 CONDUCTED EMISSIONS TEST ..... 13
7.2 RADIATED SPURIOUS EMISSION ..... 16
7.3 6DB BANDWIDTH ..... 25
7.4 DUTY CYCLE ..... 26
7.5 PEAK OUTPUT POWER ..... 28
7.6 POWER SPECTRAL DENSITY ..... 29
7.7 CONDUCTED BAND EDGE MEASUREMENT ..... 31
7.8 SPURIOUS RF CONDUCTED EMISSIONS ..... 32
7.9 ANTENNA APPLICATION ..... 33

**8 TEST RESULTS ..... 34**

8.1 MAXIMUM CONDUCTED OUTPUT POWER ..... 34
8.2 OCCUPIED CHANNEL BANDWIDTH ..... 36
8.3 MAXIMUM POWER SPECTRAL DENSITY LEVEL ..... 40
8.4 BAND EDGE ..... 42
8.5 CONDUCTED RF SPURIOUS EMISSION ..... 44

# 1 TEST RESULT CERTIFICATION

| | |
|---|---|
| Applicant's name.....: | CITYROW Holdings,Inc |
| Address.....: | 1409 3rd Avenue New York, NY 10075 |
| Manufacturer's Name.....: | Visionsky (SZ) Industrial Co., Ltd Shiyan Branch |
| Address.....: | Floor 4, building a, east Shilongzi road, Shuitian community, Shiyan Street, Bao 'an district, Shenzhen |
| Product description | |
| Product name.....: | 19.5 Tablet |
| Model and/or type reference .....: | CTYV195A |
| Family Model.....: | N/A |

Measurement Procedure Used:

| APPLICABLE STANDARDS | |
|---|---|
| APPLICABLE STANDARD/ TEST PROCEDURE | TEST RESULT |
| FCC 47 CFR Part 2, Subpart J<br>FCC 47 CFR Part 15, Subpart C<br>ANSI C63.10-2013<br>KDB 558074 D01 15.247 Meas Guidance v05r02 | Complied |

This device described above has been tested by Shenzhen NTEK Testing Technology Co., Ltd., and the test results show that the equipment under test (EUT) is in compliance with the FCC requirements. And it is applicable only to the tested sample identified in the report.
This report shall not be reproduced except in full, without the written approval of Shenzhen NTEK Testing Technology Co., Ltd., this document may be altered or revised by Shenzhen NTEK Testing Technology Co., Ltd., personnel only, and shall be noted in the revision of the document.
The test results of this report relate only to the tested sample identified in this report.

Date of Test : 10 Jun. 2020 ~ 13 Jul, 2020

Testing Engineer : Allen Liu
(Allen Liu)

Technical Manager : Jason chen
(Jason Chen)

Authorized Signatory : Sam. Chen
(Sam Chen)

## 2 SUMMARY OF TEST RESULTS

| FCC Part15 (15.247), Subpart C | | | |
|---|---|---|---|
| **Standard Section** | **Test Item** | **Verdict** | **Remark** |
| 15.207 | Conducted Emission | PASS | |
| 15.247 (a)(2) | 6dB Bandwidth | PASS | |
| 15.247 (b) | Peak Output Power | PASS | |
| 15.209 (a)<br>15.205 (a) | Radiated Spurious Emission | PASS | |
| 15.247 (e) | Power Spectral Density | PASS | |
| 15.247 (d) | Band Edge Emission | PASS | |
| 15.247 (d) | Spurious RF Conducted Emission | PASS | |
| 15.203 | Antenna Requirement | PASS | |

Remark:
1. "N/A" denotes test is not applicable in this Test Report.
2. All test items were verified and recorded according to the standards and without any deviation during the test.

# 3 FACILITIES AND ACCREDITATIONS

## 3.1 FACILITIES

All measurement facilities used to collect the measurement data are located at
1/F, Building E, Fenda Science Park, Sanwei Community, Xixiang Street, Bao'an District, Shenzhen 518126 P.R. China.
The sites are constructed in conformance with the requirements of ANSI C63.7, ANSI C63.10 and CISPR Publication 22.

## 3.2 LABORATORY ACCREDITATIONS AND LISTINGS

Site Description

| | | |
|---|---|---|
| CNAS-Lab. | : | The Laboratory has been assessed and proved to be in compliance with CNAS-CL01:2006 (identical to ISO/IEC 17025:2005)<br>The Certificate Registration Number is L5516. |
| IC-Registration | | The Certificate Registration Number is 9270A.<br>CAB identifier:CN0074 |
| FCC- Accredited | | Test Firm Registration Number: 463705.<br>Designation Number: CN1184 |
| A2LA-Lab. | | The Certificate Registration Number is 4298.01<br>This laboratory is accredited in accordance with the recognized International Standard ISO/IEC 17025:2005 General requirements for the competence of testing and calibration laboratories.<br>This accreditation demonstrates technical competence for a defined scope and the operation of a laboratory quality management system (refer to joint ISO-ILAC-IAF Communiqué dated 8 January 2009). |
| Name of Firm | : | Shenzhen NTEK Testing Technology Co., Ltd. |
| Site Location | : | 1/F, Building E, Fenda Science Park, Sanwei Community, Xixiang Street, Bao'an District, Shenzhen 518126 P.R. China. |

## 3.3 MEASUREMENT UNCERTAINTY

The reported uncertainty of measurement y±U, where expended uncertainty U is based on a standard uncertainty multiplied by a coverage factor of k=2, providing a level of confidence of approximately 95 %.

| No. | Item | Uncertainty |
|---|---|---|
| 1 | Conducted Emission Test | ±2.80dB |
| 2 | RF power, conducted | ±0.16dB |
| 3 | Spurious emissions, conducted | ±0.21dB |
| 4 | All emissions, radiated(30MHz~1GHz) | ±2.64dB |
| 5 | All emissions, radiated(1GHz~6GHz) | ±2.40dB |
| 6 | All emissions, radiated(＞6GHz) | ±2.52dB |
| 7 | Temperature | ±0.5°C |
| 8 | Humidity | ±2% |

# 4 GENERAL DESCRIPTION OF EUT

| Product Feature and Specification | |
|---|---|
| Equipment | 19.5 Tablet |
| Trade Mark | CITYROW |
| FCC ID | 2AWOZCTYV195A |
| Model No. | CTYV195A |
| Family Model | N/A |
| Model Difference | N/A |
| Operating Frequency | 2402MHz~2480MHz |
| Modulation | GFSK |
| Number of Channels | 40 Channels |
| Bluetooth Version | BT V5.0 |
| Antenna Type | FPC Antenna |
| Antenna Gain | 2.57dBi |
| Power supply | ☒DC supply:<br>DC 12V from Adapter. |
| | ☒Adapter supply:<br>Model: J651-1205000DI<br>Input: 100-240V~50/60Hz 1.5A<br>Output: 12V⎓5000mA |
| HW Version | F215Q_V2_20190905/F215Q_SUB V2_20200420 |
| SW Version | full_tb8176p1_64_bsp-userdebug 8.1.0 O11019 1588992299 release-keys |
| Firmware version | full_tb8176p1_64_bsp-userdebug 8.1.0 O11019 1588992299 release-keys |

Note: Based on the application, features, or specification exhibited in User's Manual, the EUT is considered as an ITE/Computing Device. More details of EUT technical specification, please refer to the User's Manual.

**Revision History**

| Report No. | Version | Description | Issued Date |
|---|---|---|---|
| S20060806002002 | Rev.01 | Initial issue of report | Jul 15, 2020 |
| | | | |
| | | | |
| | | | |
| | | | |
| | | | |
| | | | |
| | | | |
| | | | |
| | | | |
| | | | |
| | | | |
| | | | |
| | | | |
| | | | |

# 5 DESCRIPTION OF TEST MODES

To investigate the maximum EMI emission characteristics generates from EUT, the test system was pre-scanning tested base on the consideration of following EUT operation mode or test configuration mode which possible have effect on EMI emission level. Each of these EUT operation mode(s) or test configuration mode(s) mentioned above was evaluated respectively.

The Transmitter was operated in the normal operating mode. The TX frequency was fixed which was for the purpose of the measurements.

Test of channel included the lowest and middle and highest frequency to perform the test, then record on this report.

Those data rates (1Mbps for GFSK modulation) were used for all test.

The EUT was pretested with 3 orientations placed on the table for the radiated emission measurement –X, Y, and Z-plane. The X-plane results were found as the worst case and were shown in this report.

Carrier Frequency and Channel list:

| Channel | Frequency(MHz) |
|---|---|
| 0 | 2402 |
| 1 | 2404 |
| … | … |
| 19 | 2440 |
| 20 | 2442 |
| … | … |
| 38 | 2478 |
| 39 | 2480 |

Note: fc=2402MHz+k×2MHz k=0 to 39

The following summary table is showing all test modes to demonstrate in compliance with the standard.

| **Test Cases** | |
|---|---|
| Test Item | Data Rate/ Modulation |
| | Bluetooth 5.0_LE / GFSK |
| AC Conducted Emission | Mode 1: normal link mode |
| Radiated Test Cases | Mode 1: normal link mode |
| | Mode 2: Bluetooth Tx Ch00_2402MHz_1Mbps |
| | Mode 3: Bluetooth Tx Ch19_2440MHz_1Mbps |
| | Mode 4: Bluetooth Tx Ch39_2480MHz_1Mbps |
| Conducted Test Cases | Mode 2: Bluetooth Tx Ch00_2402MHz_1Mbps |
| | Mode 3: Bluetooth Tx Ch19_2440MHz_1Mbps |
| | Mode 4: Bluetooth Tx Ch39_2480MHz_1Mbps |

Note:
1. The engineering test program was provided and the EUT was programmed to be in continuously transmitting mode.
2. AC power line Conducted Emission was tested under maximum output power.
3. For radiated test cases, the worst mode data rate 1Mbps was reported only, because this data rate has the highest RF output power at preliminary tests, and no other significantly frequencies found in conducted spurious emission.

# 6 SETUP OF EQUIPMENT UNDER TEST

## 6.1 BLOCK DIAGRAM CONFIGURATION OF TEST SYSTEM

For AC Conducted Emission Mode

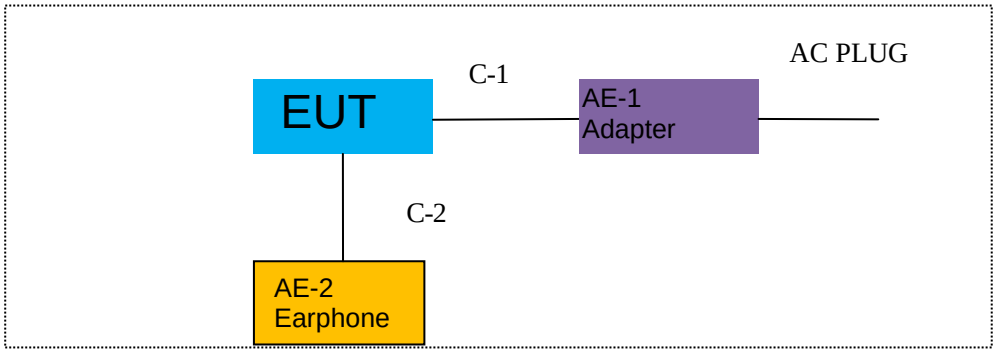


For Radiated Test Cases

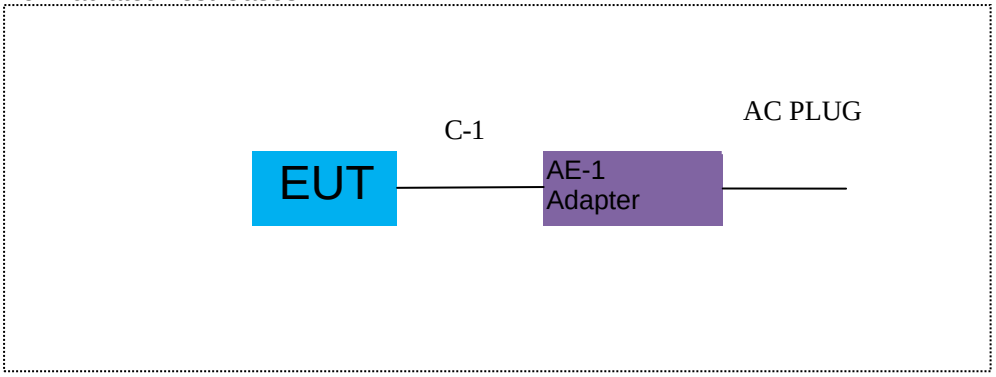


For Conducted Test Cases

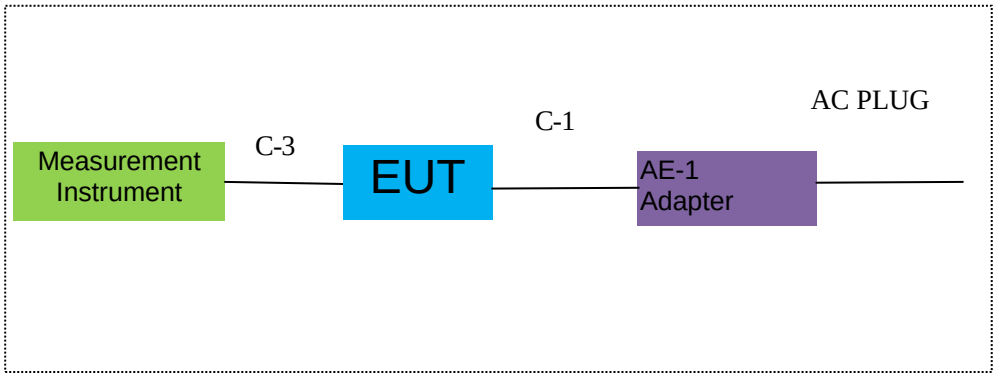


Note:The temporary antenna connector is soldered on the PCB board in order to perform conducted tests and this temporary antenna connector is listed in the equipment list.

## 6.2 SUPPORT EQUIPMENT

The EUT has been tested as an independent unit together with other necessary accessories or support units. The following support units or accessories were used to form a representative test configuration during the tests.

| Item | Equipment | Mfr/Brand | Model/Type No. | Series No. | Note |
|---|---|---|---|---|---|
| AE-1 | Adapter | N/A | J651-1205000DI | N/A | Peripherals |
| AE-2 | Earphone | N/A | N/A | N/A | Peripherals |
| | | | | | |
| | | | | | |
| | | | | | |

| Item | Cable Type | Shielded Type | Ferrite Core | Length |
|---|---|---|---|---|
| C-1 | DC Cable | NO | NO | 1.0m |
| C-2 | Earphone Cable | NO | NO | 1.2m |
| C-3 | RF Cable | YES | NO | 0.1m |
| | | | | |
| | | | | |
| | | | | |
| | | | | |

**Notes:**

(1) The support equipment was authorized by Declaration of Confirmation.
(2) For detachable type I/O cable should be specified the length in cm in『Length』column.
(3) “YES” is means “shielded” “with core”; “NO” is means “unshielded” “without core”.

## 6.3 EQUIPMENTS LIST FOR ALL TEST ITEMS

Radiation& Conducted Test equipment

| Item | Kind of Equipment | Manufacturer | Type No. | Serial No. | Last calibration | Calibrated until | Calibration period |
|---|---|---|---|---|---|---|---|
| 1 | Spectrum Analyzer | Aglient | E4407B | MY45108040 | 2020.05.11 | 2021.05.10 | 1 year |
| 2 | Spectrum Analyzer | Agilent | N9020A | MY49100060 | 2019.08.28 | 2020.08.27 | 1 year |
| 3 | Spectrum Analyzer | R&S | FSV40 | 101417 | 2019.08.28 | 2020.08.27 | 1 year |
| 4 | Test Receiver | R&S | ESPI7 | 101318 | 2020.05.11 | 2021.05.10 | 1 year |
| 5 | Bilog Antenna | TESEQ | CBL6111D | 31216 | 2020.04.11 | 2021.04.10 | 1 year |
| 6 | 50Ω Coaxial Switch | Anritsu | MP59B | 6200983705 | 2020.05.11 | 2023.05.10 | 3 year |
| 7 | Horn Antenna | EM | EM-AH-10180 | 2011071402 | 2020.04.11 | 2021.04.10 | 1 year |
| 8 | Broadband Horn Antenna | SCHWARZBECK | BBHA 9170 | 803 | 2019.12.10 | 2020.12.09 | 1 year |
| 9 | Amplifier | EMC | EMC051835SE | 980246 | 2019.08.06 | 2020.08.05 | 1 year |
| 10 | Active Loop Antenna | SCHWARZBECK | FMZB 1519 B | 055 | 2019.12.11 | 2020.12.10 | 1 year |
| 11 | Power Meter | DARE | RPR3006W | 15I00041SNO84 | 2019.08.06 | 2020.08.05 | 1 year |
| 12 | Test Cable (9KHz-30MHz) | N/A | R-01 | N/A | 2019.08.06 | 2022.08.05 | 3 year |
| 13 | Test Cable (30MHz-1GHz) | N/A | R-02 | N/A | 2019.08.06 | 2020.08.05 | 1 year |
| 14 | High Test Cable(1G-40GHz) | N/A | R-03 | N/A | 2019.06.28 | 2022.06.27 | 3 year |
| 15 | High Test Cable(1G-40GHz) | N/A | R-04 | N/A | 2020.04.11 | 2021.04.10 | 1 year |
| 16 | Filter | TRILTHIC | 2400MHz | 29 | 2019.08.06 | 2020.08.05 | 1 year |
| 17 | temporary antenna connector (Note) | NTS | R001 | N/A | N/A | N/A | N/A |

Note:

We will use the temporary antenna connector (soldered on the PCB board) When conducted test
And this temporary antenna connector is listed within the instrument list

AC Conduction Test equipment

| Item | Kind of Equipment | Manufacturer | Type No. | Serial No. | Last calibration | Calibrated until | Calibration period |
|---|---|---|---|---|---|---|---|
| 1 | Test Receiver | R&S | ESCI | 101160 | 2020.05.11 | 2021.05.10 | 1 year |
| 2 | LISN | R&S | ENV216 | 101313 | 2020.04.11 | 2021.04.10 | 1 year |
| 3 | LISN | SCHWARZBECK | NNLK 8129 | 8129245 | 2020.05.11 | 2021.05.10 | 1 year |
| 4 | 50Ω Coaxial Switch | ANRITSU CORP | MP59B | 6200983704 | 2020.05.11 | 2023.05.10 | 3 year |
| 5 | Test Cable (9KHz-30MHz) | N/A | C01 | N/A | 2020.05.11 | 2023.05.10 | 3 year |
| 6 | Test Cable (9KHz-30MHz) | N/A | C02 | N/A | 2020.05.11 | 2023.05.10 | 3 year |
| 7 | Test Cable (9KHz-30MHz) | N/A | C03 | N/A | 2020.05.11 | 2023.05.10 | 3 year |

Note: Each piece of equipment is scheduled for calibration once a year except the Aux Equipment & Test Cable which is scheduled for calibration every 2 or 3 years.

# 7 TEST REQUIREMENTS

## 7.1 CONDUCTED EMISSIONS TEST

### 7.1.1 Applicable Standard

According to FCC Part 15.207(a)

### 7.1.2 Conformance Limit

| Frequency(MHz) | Conducted Emission Limit | |
|---|---|---|
| | Quasi-peak | Average |
| 0.15-0.5 | 66-56* | 56-46* |
| 0.5-5.0 | 56 | 46 |
| 5.0-30.0 | 60 | 50 |

Note: 1. *Decreases with the logarithm of the frequency
2. The lower limit shall apply at the transition frequencies
3. The limit decreases in line with the logarithm of the frequency in the range of 0.15 to 0.50MHz.

### 7.1.3 Measuring Instruments

The Measuring equipment is listed in the section 6.3 of this test report.

### 7.1.4 Test Configuration

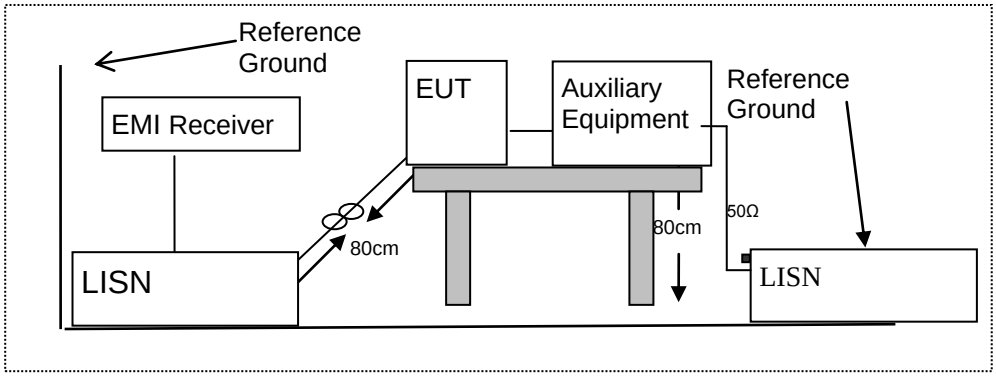


### 7.1.5 Test Procedure

According to the requirements in Section 13.1.4.1 of ANSI C63.10-2013 Conducted emissions the EUT measured in the frequency range between 0.15 MHz and 30 MHz using CISPR Quasi-Peak and average detector mode.

1. The EUT was placed 0.4 meter from the conducting wall of the shielding room.
2. The EUT was placed on a table which is 0.8m above ground plane.
3. Connect EUT to the power mains through a line impedance stabilization network (LISN). All other support equipments powered from additional LISN(s). The LISN provide 50 Ohm/ 50uH of coupling impedance for the measuring instrument.
4. Interconnecting cables that hang closer than 40 cm to the ground plane shall be folded back and forth in the center forming a bundle 30 to 40cm long.
5. I/O cables that are not connected to a peripheral shall be bundled in the center. The end of the cable may be terminated, if required, using the correct terminating impedance. The overall length shall not exceed 1 m.
6. LISN at least 80 cm from nearest part of EUT chassis.
7. The frequency range from 150KHz to 30MHz was searched.
8. Set the test-receiver system to Peak Detect Function and specified bandwidth(IF bandwidth=9KHz) with Maximum Hold Mode
9. For the actual test configuration, please refer to the related Item –EUT Test Photos.

### 7.1.6 Test Results

| | | | |
|---|---|---|---|
| EUT： | 19.5 Tablet | Model Name ： | CTYV195A |
| Temperature： | 26 ℃ | Relative Humidity： | 54% |
| Pressure： | 1010hPa | Phase : | L |
| Test Voltage ： | DC 12V from Adapter AC 120V/60Hz | Test Mode： | Mode 1 |

| Frequency (MHz) | Reading Level (dBμV) | Correct Factor (dB) | Measure-ment (dBμV) | Limits (dBμV) | Margin (dB) | Remark |
|---|---|---|---|---|---|---|
| 0.1539 | 44.74 | 9.56 | 54.30 | 65.78 | -11.48 | QP |
| 0.1539 | 29.01 | 9.56 | 38.57 | 55.78 | -17.21 | AVG |
| 0.2740 | 32.28 | 9.54 | 41.82 | 60.99 | -19.17 | QP |
| 0.2740 | 20.80 | 9.54 | 30.34 | 50.99 | -20.65 | AVG |
| 0.3899 | 29.63 | 9.55 | 39.18 | 58.06 | -18.88 | QP |
| 0.3899 | 22.17 | 9.55 | 31.72 | 48.06 | -16.34 | AVG |
| 0.5100 | 32.17 | 9.55 | 41.72 | 56.00 | -14.28 | QP |
| 0.5100 | 24.50 | 9.55 | 34.05 | 46.00 | -11.95 | AVG |
| 0.8180 | 26.54 | 9.55 | 36.09 | 56.00 | -19.91 | QP |
| 0.8180 | 17.21 | 9.55 | 26.76 | 46.00 | -19.24 | AVG |
| 1.7420 | 24.02 | 9.58 | 33.60 | 56.00 | -22.40 | QP |
| 1.7420 | 14.55 | 9.58 | 24.13 | 46.00 | -21.87 | AVG |

Remark:

1. All readings are Quasi-Peak and Average values.
2. Factor = Insertion Loss + Cable Loss.

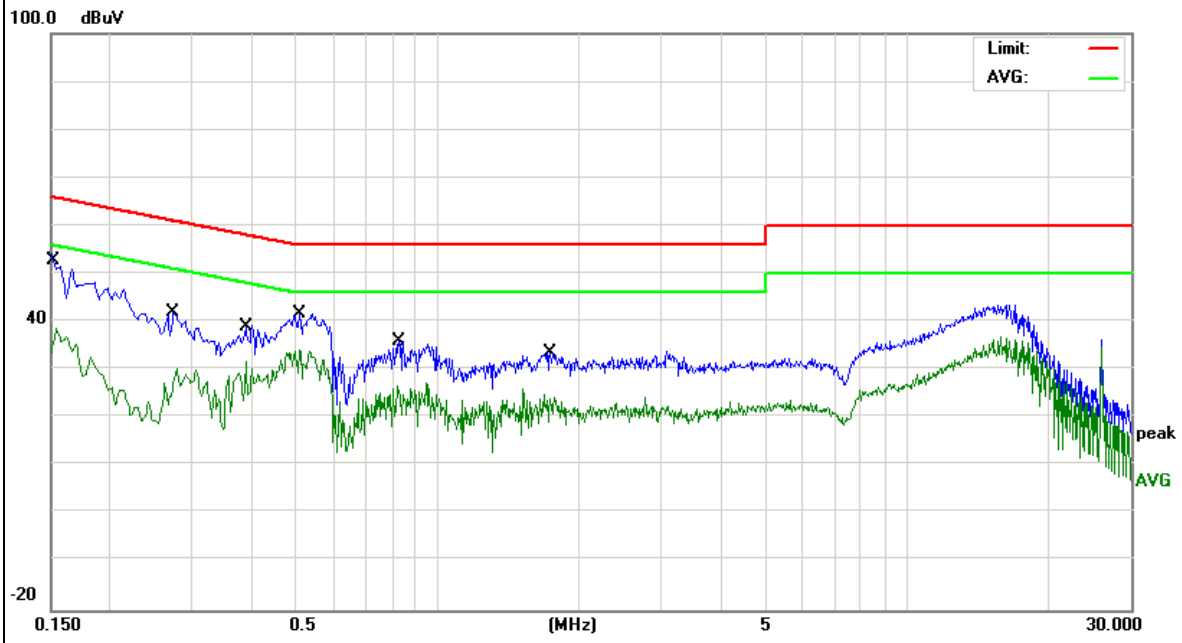

| | | | |
|---|---|---|---|
| EUT： | 19.5 Tablet | Model Name ： | CTYV195A |
| Temperature： | 26 ℃ | Relative Humidity： | 54% |
| Pressure： | 1010hPa | Phase : | N |
| Test Voltage ： | DC 12V from Adapter<br>AC 120V/60Hz | Test Mode： | Mode 1 |

| Frequency (MHz) | Reading Level (dBμV) | Correct Factor (dB) | Measure-ment (dBμV) | Limits (dBμV) | Margin (dB) | Remark |
|---|---|---|---|---|---|---|
| 0.1607 | 42.15 | 9.55 | 51.70 | 65.42 | -13.72 | QP |
| 0.1607 | 27.06 | 9.55 | 36.61 | 55.42 | -18.81 | AVG |
| 0.2740 | 31.48 | 9.53 | 41.01 | 60.99 | -19.98 | QP |
| 0.2740 | 20.95 | 9.53 | 30.48 | 50.99 | -20.51 | AVG |
| 0.3940 | 30.01 | 9.54 | 39.55 | 57.98 | -18.43 | QP |
| 0.3940 | 22.28 | 9.54 | 31.82 | 47.98 | -16.16 | AVG |
| 0.5460 | 32.36 | 9.54 | 41.90 | 56.00 | -14.10 | QP |
| 0.5460 | 24.96 | 9.54 | 34.50 | 46.00 | -11.50 | AVG |
| 0.8139 | 26.78 | 9.54 | 36.32 | 56.00 | -19.68 | QP |
| 0.8139 | 17.30 | 9.54 | 26.84 | 46.00 | -19.16 | AVG |
| 0.9540 | 26.25 | 9.55 | 35.80 | 56.00 | -20.20 | QP |
| 0.9540 | 16.45 | 9.55 | 26.00 | 46.00 | -20.00 | AVG |

Remark:

1. All readings are Quasi-Peak and Average values.
2. Factor = Insertion Loss + Cable Loss.

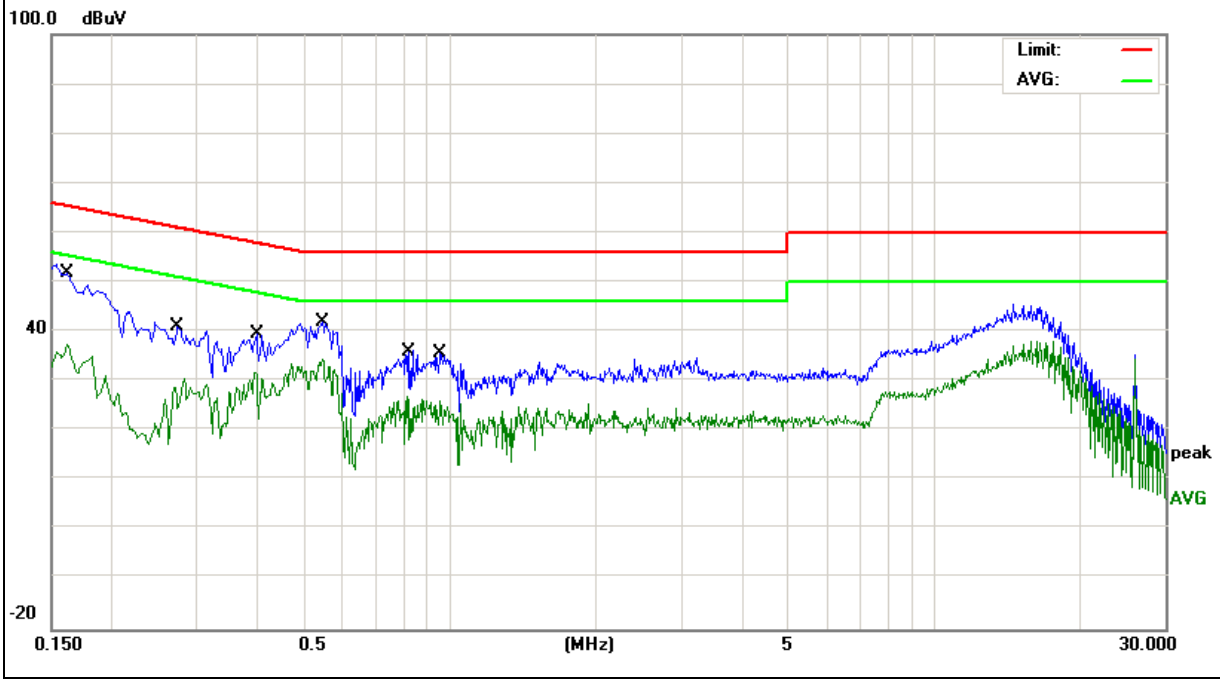

## 7.2 RADIATED SPURIOUS EMISSION

### 7.2.1 Applicable Standard

**According to FCC Part 15.247(d) and 15.209 and ANSI C63.10-2013**

### 7.2.2 Conformance Limit

According to FCC Part 15.247(d): radiated emissions which fall in the restricted bands, as defined in §15.205(a), must also comply with the radiated emission limits specified in §15.209(a) (see §15.205(c)).
According to FCC Part15.205, Restricted bands

| MHz | MHz | MHz | GHz |
|---|---|---|---|
| 0.090-0.110 | 16.42-16.423 | 399.9-410 | 4.5-5.15 |
| 0.495-0.505 | 16.69475-16.69525 | 608-614 | 5.35-5.46 |
| 2.1735-2.1905 | 16.80425-16.80475 | 960-1240 | 7.25-7.75 |
| 4.125-4.128 | 25.5-25.67 | 1300-1427 | 8.025-8.5 |
| 4.17725-4.17775 | 37.5-38.25 | 1435-1626.5 | 9.0-9.2 |
| 4.20725-4.20775 | 73-74.6 | 1645.5-1646.5 | 9.3-9.5 |
| 6.215-6.218 | 74.8-75.2 | 1660-1710 | 10.6-12.7 |
| 6.26775-6.26825 | 123-138 | 2200-2300 | 14.47-14.5 |
| 8.291-8.294 | 149.9-150.05 | 2310-2390 | 15.35-16.2 |
| 8.362-8.366 | 156.52475-156.52525 | 2483.5-2500 | 17.7-21.4 |
| 8.37625-8.38675 | 156.7-156.9 | 2690-2900 | 22.01-23.12 |
| 8.41425-8.41475 | 162.0125-167.17 | 3260-3267 | 23.6-24.0 |
| 12.29-12.293 | 167.72-173.2 | 3332-3339 | 31.2-31.8 |
| 12.51975-12.52025 | 240-285 | 3345.8-3358 | 36.43-36.5 |
| 12.57675-12.57725 | 322-335.4 | 3600-4400 | (2) |
| 13.36-13.41 | | | |

20dBc in any 100 kHz bandwidth outside the operating frequency band. In case the emission fall within the restricted band specified on 15.205(a), then the 15.209(a) limit in the table below has to be followed.

| Restricted Frequency(MHz) | Field Strength (μV/m) | Field Strength (dBμV/m) | Measurement Distance |
|---|---|---|---|
| 0.009~0.490 | 2400/F(KHz) | 20 log (uV/m) | 300 |
| 0.490~1.705 | 24000/F(KHz) | 20 log (uV/m) | 30 |
| 1.705~30.0 | 30 | 29.5 | 30 |
| 30-88 | 100 | 40 | 3 |
| 88-216 | 150 | 43.5 | 3 |
| 216-960 | 200 | 46 | 3 |
| Above 960 | 500 | 54 | 3 |

Limits of Radiated Emission Measurement(Above 1000MHz)

| Frequency(MHz) | Class B (dBuV/m) (at 3M) | |
|---|---|---|
| | PEAK | AVERAGE |
| Above 1000 | 74 | 54 |

Remark :1. Emission level in dBuV/m=20 log (uV/m)
2. Measurement was performed at an antenna to the closed point of EUT distance of meters.
3. For Frequency 9kHz~30MHz: Distance extrapolation factor =40log(Specific distance/ test distance)(dB); Limit line=Specific limits(dBuV) + distance extrapolation factor.
For Frequency above 30MHz: Distance extrapolation factor =20log(Specific distance/ test distance)(dB);
Limit line=Specific limits(dBuV) + distance extrapolation factor.

### 7.2.3 Measuring Instruments

The Measuring equipment is listed in the section 6.3 of this test report.

### 7.2.4 Test Configuration

(a) For radiated emissions below 30MHz

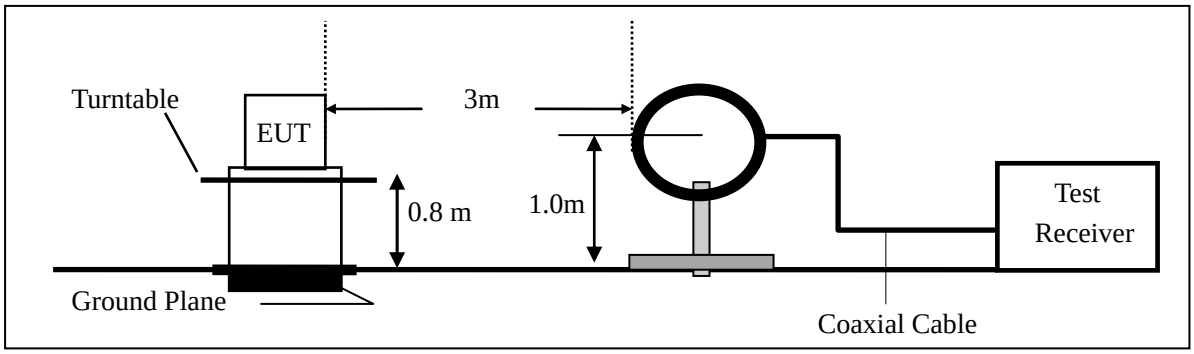


(b) For radiated emissions from 30MHz to 1000MHz

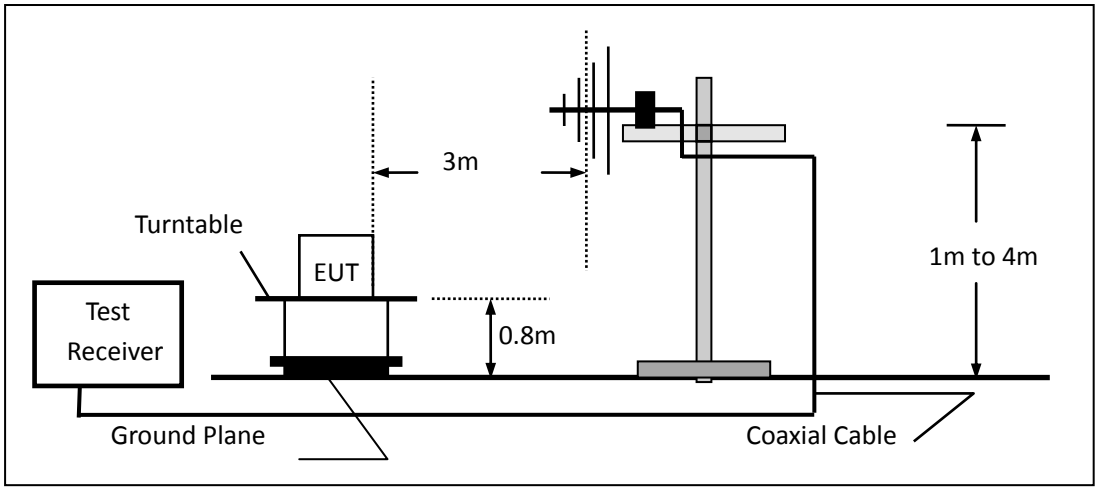


(c) For radiated emissions above 1000MHz

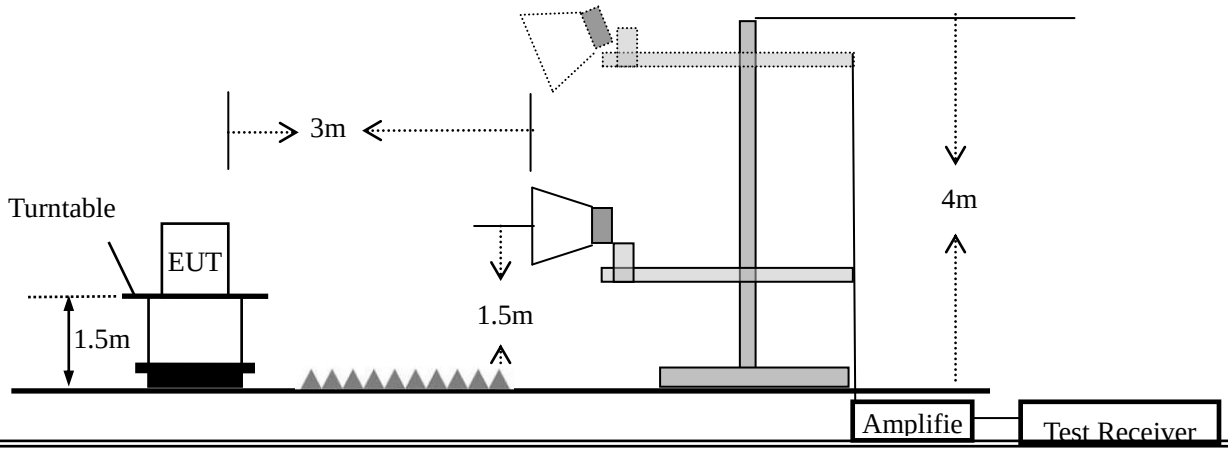

### 7.2.5 Test Procedure

The test site semi-anechoic chamber has met the requirement of NSA tolerance 4 dB according to the standards: ANSI C63.10-2013. The test distance is 3m.The setup is according to the requirements in Section 13.1.4.1 of ANSI C63.10-2013 and CAN/CSA-CEI/IEC CISPR 22.
This test is required for any spurious emission that falls in a Restricted Band, as defined in Section 15.205. It must be performed with the highest gain of each type of antenna proposed for use with the EUT.
Use the following spectrum analyzer settings:

| Spectrum Parameter | Setting |
|---|---|
| Attenuation | Auto |
| Start Frequency | 1000 MHz |
| Stop Frequency | 10th carrier harmonic |
| RB / VB (emission in restricted band) | 1 MHz / 1 MHz for Peak, 1 MHz / 1MHz for Average |

| Receiver Parameter | Setting |
|---|---|
| Attenuation | Auto |
| Start ~ Stop Frequency | 9kHz~150kHz / RB 200Hz for QP |
| Start ~ Stop Frequency | 150kHz~30MHz / RB 9kHz for QP |
| Start ~ Stop Frequency | 30MHz~1000MHz / RB 120kHz for QP |

a. The measuring distance of at 3 m shall be used for measurements at frequency up to 1GHz. For frequencies above 1GHz, any suitable measuring distance may be used.
b. The EUT was placed on the top of a rotating table 0.8 m for below 1GHz and 1.5m for above 1GHz the ground at a 3 meter. The table was rotated 360 degrees to determine the position of the highest radiation.
c. The height of the equipment or of the substitution antenna shall be 0.8 m for below 1GHz and 1.5m for above 1GHz; the height of the test antenna shall vary between 1 m to 4 m. Both horizontal and vertical polarizations of the antenna are set to make the measurement.
d. For the radiated emission test above 1GHz:
Place the measurement antenna away from each area of the EUT determined to be a source of emissions at the specified measurement distance, while keeping the measurement antenna aimed at the source of emissions at each frequency of significant emissions, with polarization oriented for maximum response. The measurement antenna may have to be higher or lower than the EUT, depending on the radiation pattern of the emission and staying aimed at the emission source for receiving the maximum signal. The final measurement antenna elevation shall be that which maximizes the emissions. The measurement antenna elevation for maximum emissions shall be restricted to a range of heights of from 1 m to 4 m above the ground or reference ground plane.
e. The initial step in collecting conducted emission data is a spectrum analyzer peak detector mode pre-scanning the measurement frequency range. Significant peaks are then marked and then Quasi Peak detector mode re-measured.
f. If the Peak Mode measured value compliance with and lower than Quasi Peak Mode Limit, the EUT shall be deemed to meet QP Limits and then no additional QP Mode measurement performed.
g. For the actual test configuration, please refer to the related Item –EUT Test Photos.

Note:

Both horizontal and vertical antenna polarities were tested
and performed pretest to three orthogonal axis. The worst case emissions were reported

During the radiated emission test, the Spectrum Analyzer was set with the following configurations:

| Frequency Band (MHz) | Function | Resolution bandwidth | Video Bandwidth |
|---|---|---|---|
| 30 to 1000 | QP | 120 kHz | 300 kHz |
| Above 1000 | Peak | 1 MHz | 1 MHz |
| | Average | 1 MHz | 1 MHz |

Note: for the frequency ranges below 30 MHz, a narrower RBW is used for these ranges but the measured value should add a RBW correction factor (RBWCF) where RBWCF [dB] =10*lg(100 [kHz]/narrower RBW [kHz]). , the narrower RBW is 1 kHz and RBWCF is 20 dB for the frequency 9 kHz to 150 kHz, and the narrower RBW is 10 kHz and RBWCF is 10 dB for the frequency 150 kHz to 30 MHz.

### 7.2.6 Test Results

■ Spurious Emission below 30MHz (9KHz to 30MHz)

| | | | |
|---|---|---|---|
| EUT: | 19.5 Tablet | Model No.: | CTYV195A |
| Temperature: | 20 ℃ | Relative Humidity: | 48% |
| Test Mode: | Mode2/Mode3/Mode4 | Test By: | Allen Liu |

| Freq. (MHz) | Ant.Pol. H/V | Emission Level(dBuV/m) | | Limit 3m(dBuV/m) | | Over(dB) | |
|---|---|---|---|---|---|---|---|
| | | PK | AV | PK | AV | PK | AV |
| -- | -- | -- | -- | -- | -- | -- | -- |

Note: the amplitude of spurious emission that is attenuated by more than 20dB below the permissible limit has no need to be reported.

■ Spurious Emission below 1GHz (30MHz to 1GHz)
All the modulation modes have been tested, and the worst result was report as below:

| | | | |
|---|---|---|---|
| EUT: | 19.5 Tablet | Model Name : | CTYV195A |
| Temperature: | 20 ℃ | Relative Humidity: | 48% |
| Pressure: | 1010hPa | Test Mode: | Mode 1 |
| Test Voltage : | DC 12V from Adapter | | |

| Polar (H/V) | Frequency (MHz) | Meter Reading (dBuV) | Factor (dB) | Emission Level (dBuV/m) | Limits (dBuV/m) | Margin (dB) | Remark |
|---|---|---|---|---|---|---|---|
| V | 74.3954 | 22.68 | 7.25 | 29.93 | 40.00 | -10.07 | QP |
| V | 106.7587 | 14.93 | 11.14 | 26.07 | 43.50 | -17.43 | QP |
| V | 150.0107 | 17.02 | 11.97 | 28.99 | 43.50 | -14.51 | QP |
| V | 223.7333 | 20.59 | 10.91 | 31.50 | 46.00 | -14.50 | QP |
| V | 309.9977 | 24.98 | 15.46 | 40.44 | 46.00 | -5.56 | QP |
| V | 605.6592 | 19.57 | 21.83 | 41.40 | 46.00 | -4.60 | QP |

**Remark:**
Absolute Level= ReadingLevel+ Factor, Margin= Absolute Level - Limit

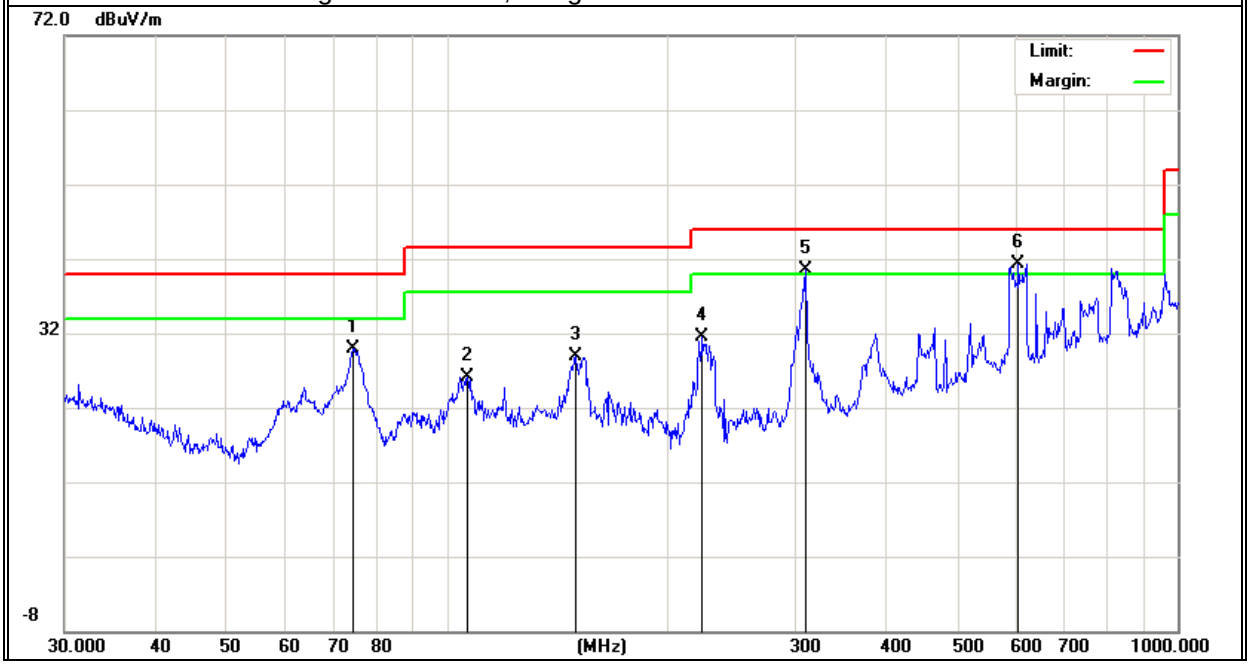

| Polar (H/V) | Frequency (MHz) | Meter Reading (dBuV) | Factor (dB) | Emission Level (dBuV/m) | Limits (dBuV/m) | Margin (dB) | Remark |
|---|---|---|---|---|---|---|---|
| H | 74.3954 | 19.21 | 7.25 | 26.46 | 40.00 | -13.54 | QP |
| H | 152.6640 | 22.52 | 11.82 | 34.34 | 43.50 | -9.16 | QP |
| H | 222.1698 | 27.27 | 10.93 | 38.20 | 46.00 | -7.80 | QP |
| H | 309.9977 | 24.84 | 15.46 | 40.30 | 46.00 | -5.70 | QP |
| H | 590.9737 | 18.87 | 21.43 | 40.30 | 46.00 | -5.70 | QP |
| H | 818.8341 | 16.32 | 25.18 | 41.50 | 46.00 | -4.50 | QP |

**Remark:**
Absolute Level= ReadingLevel+ Factor, Margin= Absolute Level - Limit

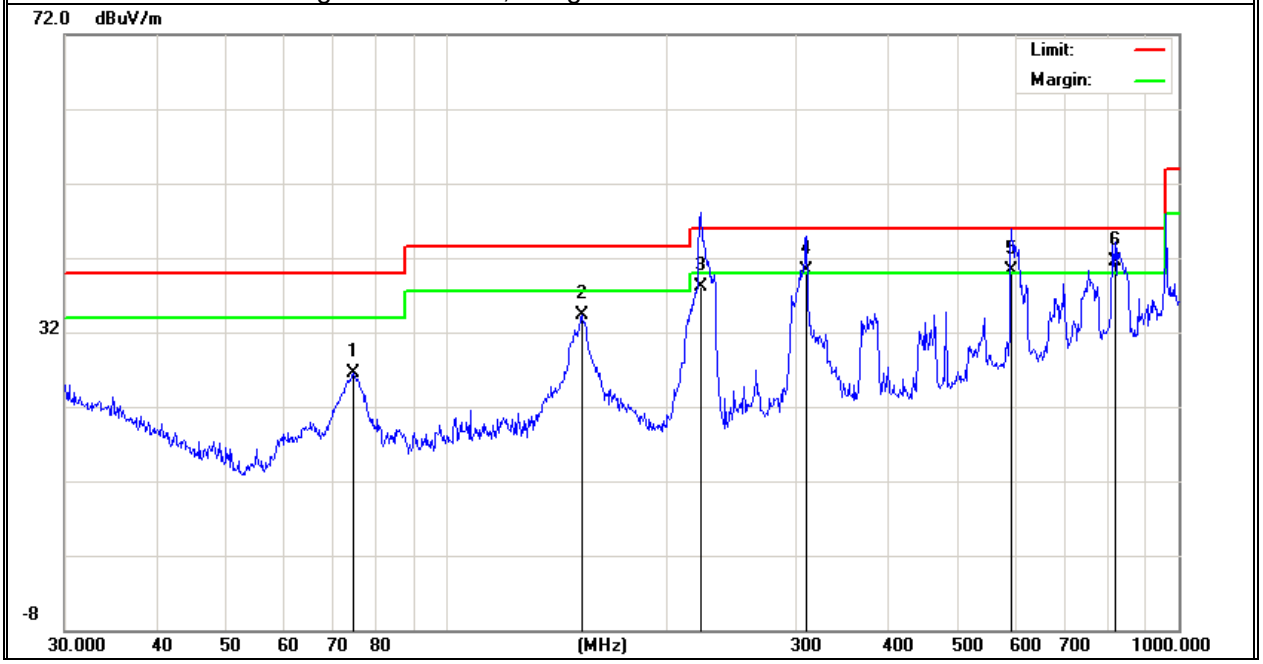

■ Spurious Emission Above 1GHz (1GHz to 25GHz)

| | | | |
|---|---|---|---|
| EUT: | 19.5 Tablet | Model No.: | CTYV195A |
| Temperature: | 20 ℃ | Relative Humidity: | 48% |
| Test Mode: | Mode2/Mode3/Mode4 | Test By: | Allen Liu |

| Frequency (MHz) | Read Level (dBμV) | Cable loss (dB) | Antenna Factor dB/m | Preamp Factor (dB) | Emission Level (dBμV/m) | Limits (dBμV/m) | Margin (dB) | Remark | Comment |
|---|---|---|---|---|---|---|---|---|---|
| Low Channel (2402 MHz)-Above 1G | | | | | | | | | |
| 4839.51 | 60.15 | 5.21 | 35.59 | 44.30 | 56.65 | 74.00 | -17.35 | Pk | Vertical |
| 4839.51 | 43.21 | 5.21 | 35.59 | 44.30 | 39.71 | 54.00 | -14.29 | AV | Vertical |
| 7206.76 | 60.55 | 6.48 | 36.27 | 44.60 | 58.70 | 74.00 | -15.30 | Pk | Vertical |
| 7206.76 | 43.26 | 6.48 | 36.27 | 44.60 | 41.41 | 54.00 | -12.59 | AV | Vertical |
| 4804.67 | 63.79 | 5.21 | 35.55 | 44.30 | 60.25 | 74.00 | -13.75 | Pk | Horizontal |
| 4804.67 | 44.01 | 5.21 | 35.55 | 44.30 | 40.47 | 54.00 | -13.53 | AV | Horizontal |
| 7206.71 | 63.64 | 6.48 | 36.27 | 44.52 | 61.87 | 74.00 | -12.13 | Pk | Horizontal |
| 7206.71 | 43.15 | 6.48 | 36.27 | 44.52 | 41.38 | 54.00 | -12.62 | AV | Horizontal |
| Mid Channel (2440 MHz)-Above 1G | | | | | | | | | |
| 4880.91 | 62.69 | 5.21 | 35.66 | 44.20 | 59.36 | 74.00 | -14.64 | Pk | Vertical |
| 4880.91 | 43.50 | 5.21 | 35.66 | 44.20 | 40.17 | 54.00 | -13.83 | AV | Vertical |
| 7320.30 | 62.57 | 7.10 | 36.50 | 44.43 | 61.74 | 74.00 | -12.26 | Pk | Vertical |
| 7320.30 | 43.11 | 7.10 | 36.50 | 44.43 | 42.28 | 54.00 | -11.72 | AV | Vertical |
| 4880.22 | 60.33 | 5.21 | 35.66 | 44.20 | 57.00 | 74.00 | -17.00 | Pk | Horizontal |
| 4880.22 | 43.69 | 5.21 | 35.66 | 44.20 | 40.36 | 54.00 | -13.64 | AV | Horizontal |
| 7320.40 | 64.50 | 7.10 | 36.50 | 44.43 | 63.67 | 74.00 | -10.33 | Pk | Horizontal |
| 7320.40 | 43.14 | 7.10 | 36.50 | 44.43 | 42.31 | 54.00 | -11.69 | AV | Horizontal |
| High Channel (2480 MHz)- Above 1G | | | | | | | | | |
| 4960.03 | 62.83 | 5.21 | 35.52 | 44.21 | 59.35 | 74.00 | -14.65 | Pk | Vertical |
| 4960.03 | 43.59 | 5.21 | 35.52 | 44.21 | 40.11 | 54.00 | -13.89 | AV | Vertical |
| 7440.10 | 64.40 | 7.10 | 36.53 | 44.60 | 63.43 | 74.00 | -10.57 | Pk | Vertical |
| 7440.10 | 43.42 | 7.10 | 36.53 | 44.60 | 42.45 | 54.00 | -11.55 | AV | Vertical |
| 4960.70 | 64.22 | 5.21 | 35.52 | 44.21 | 60.74 | 74.00 | -13.26 | Pk | Horizontal |
| 4960.70 | 43.63 | 5.21 | 35.52 | 44.21 | 40.15 | 54.00 | -13.85 | AV | Horizontal |
| 7440.55 | 61.10 | 7.10 | 36.53 | 44.60 | 60.13 | 74.00 | -13.87 | Pk | Horizontal |
| 7440.55 | 43.74 | 7.10 | 36.53 | 44.60 | 42.77 | 54.00 | -11.23 | AV | Horizontal |

Note:

(1) Emission Level= Antenna Factor + Cable Loss + Read Level - Preamp Factor

(2)All other emissions more than 20dB below the limit.

■ Spurious Emission in Restricted Band 2310-2390MHz and 2483.5-2500MHz

| | | | |
|---|---|---|---|
| EUT: | 19.5 Tablet | Model No.: | CTYV195A |
| Temperature: | 20 ℃ | Relative Humidity: | 48% |
| Test Mode: | Mode2/ Mode4 | Test By: | Allen Liu |

| Frequency (MHz) | Meter Reading (dBμV) | Cable Loss (dB) | Antenna Factor dB/m | Preamp Factor (dB) | Emission Level (dBμV/m) | Limits (dBμV/m) | Margin (dB) | Detector Type | Comment |
|---|---|---|---|---|---|---|---|---|---|
| GFSK | | | | | | | | | |
| 2310.00 | 67.81 | 2.97 | 27.21 | 43.80 | 54.19 | 74 | -19.81 | Pk | Horizontal |
| 2310.00 | 44.25 | 2.97 | 27.21 | 43.80 | 30.63 | 54 | -23.37 | AV | Horizontal |
| 2310.00 | 65.35 | 2.97 | 27.21 | 43.80 | 51.73 | 74 | -22.27 | Pk | Vertical |
| 2310.00 | 48.36 | 2.97 | 27.21 | 43.80 | 34.74 | 54 | -19.26 | AV | Vertical |
| 2390.00 | 66.28 | 3.14 | 27.21 | 43.80 | 52.83 | 74 | -21.17 | Pk | Vertical |
| 2390.00 | 48.41 | 3.14 | 27.21 | 43.80 | 34.96 | 54 | -19.04 | AV | Vertical |
| 2390.00 | 67.91 | 3.14 | 27.21 | 43.80 | 54.46 | 74 | -19.54 | Pk | Horizontal |
| 2390.00 | 48.23 | 3.14 | 27.21 | 43.80 | 34.78 | 54 | -19.22 | AV | Horizontal |
| 2483.50 | 67.83 | 3.58 | 27.70 | 44.00 | 55.11 | 74 | -18.89 | Pk | Vertical |
| 2483.50 | 48.83 | 3.58 | 27.70 | 44.00 | 36.11 | 54 | -17.89 | AV | Vertical |
| 2483.50 | 67.26 | 3.58 | 27.70 | 44.00 | 54.54 | 74 | -19.46 | Pk | Horizontal |
| 2483.50 | 48.14 | 3.58 | 27.70 | 44.00 | 35.42 | 54 | -18.58 | AV | Horizontal |

Note: (1) All other emissions more than 20dB below the limit.

■ Spurious Emission in Restricted Band 3260MHz-18000MHz

| | | | |
|---|---|---|---|
| EUT: | 19.5 Tablet | Model No.: | CTYV195A |
| Temperature: | 20 ℃ | Relative Humidity: | 48% |
| Test Mode: | Mode2/ Mode4 | Test By: | Allen Liu |

| Frequency (MHz) | Reading Level (dBμV) | Cable Loss (dB) | Antenna dB/m | Preamp Factor (dB) | Emission Level (dBμV/m) | Limits (dBμV/m) | Margin (dB) | Detector Type | Comment |
|---|---|---|---|---|---|---|---|---|---|
| 3260 | 63.98 | 4.04 | 29.57 | 44.70 | 52.89 | 74 | -21.11 | Pk | Vertical |
| 3260 | 43.82 | 4.04 | 29.57 | 44.70 | 32.73 | 54 | -21.27 | AV | Vertical |
| 3260 | 62.96 | 4.04 | 29.57 | 44.70 | 51.87 | 74 | -22.13 | Pk | Horizontal |
| 3260 | 44.09 | 4.04 | 29.57 | 44.70 | 33.00 | 54 | -21.00 | AV | Horizontal |
| 3332 | 64.21 | 4.26 | 29.87 | 44.40 | 53.94 | 74 | -20.06 | Pk | Vertical |
| 3332 | 44.57 | 4.26 | 29.87 | 44.40 | 34.30 | 54 | -19.70 | AV | Vertical |
| 3332 | 63.21 | 4.26 | 29.87 | 44.40 | 52.94 | 74 | -21.06 | Pk | Horizontal |
| 3332 | 44.25 | 4.26 | 29.87 | 44.40 | 33.98 | 54 | -20.02 | AV | Horizontal |
| 17797 | 47.02 | 10.99 | 43.95 | 43.50 | 58.46 | 74 | -15.54 | Pk | Vertical |
| 17797 | 34.65 | 10.99 | 43.95 | 43.50 | 46.09 | 54 | -7.91 | AV | Vertical |
| 17788 | 46.28 | 11.81 | 43.69 | 44.60 | 57.18 | 74 | -16.82 | Pk | Horizontal |
| 17788 | 34.76 | 11.81 | 43.69 | 44.60 | 45.66 | 54 | -8.34 | AV | Horizontal |

Note: (1) All other emissions more than 20dB below the limit.

## 7.3 6DB BANDWIDTH

### 7.3.1 Applicable Standard

According to FCC Part 15.247(a)(2) and KDB 558074 D01 15.247 Meas Guidance v05r02 Section 8.2.

### 7.3.2 Conformance Limit

The minimum permissible 6dB bandwidth is 500 kHz.

### 7.3.3 Measuring Instruments

The Measuring equipment is listed in the section 6.3 of this test report.

### 7.3.4 Test Setup

Please refer to Section 6.1 of this test report.

### 7.3.5 Test Procedure

The testing follows Subclause 11.8 of ANSI C63.10
The RF output of EUT was connected to the spectrum analyzer by RF cable and attenuator.
The path loss was compensated to the results for each measurement.
Set to the maximum power setting and enable the EUT transmit continuously.
The EUT was operating in controlled its channel.
Use the following spectrum analyzer settings:

a) Set RBW = 100 kHz.
b) Set the video bandwidth (VBW) ≥ 3*RBW.
c) Detector = Peak.
d) Trace mode = max hold.
e) Sweep = auto couple.
f) Allow the trace to stabilize.
g) Measure the maximum width of the emission that is constrained by the frequencies associated with the two outermost amplitude points (upper and lower frequencies) that are attenuated by 6 dB relative to the maximum level measured in the fundamental emission.

### 7.3.6 Test Results

| | | | |
|---|---|---|---|
| EUT: | 19.5 Tablet | Model No.: | CTYV195A |
| Temperature: | 20 ℃ | Relative Humidity: | 48% |
| Test Mode: | Mode2/Mode3/Mode4 | Test By: | Allen Liu |

Test data reference attachment.

## 7.4 DUTY CYCLE

### 7.4.1 Applicable Standard

According to KDB 558074 D01 15.247 Meas Guidance v05r02s Section 6.

### 7.4.2 Conformance Limit

No limit requirement.

### 7.4.3 Measuring Instruments

The Measuring equipment is listed in the section 6.3 of this test report.

### 7.4.4 Test Setup

Please refer to Section 6.1 of this test report.

### 7.4.5 Test Procedure

The zero-span mode on a spectrum analyzer or EMI receiver if the response time and spacing between bins on the sweep are sufficient to permit accurate measurements of the on and off times of the transmitted signal. Set the center frequency of the instrument to the center frequency of the transmission. Set RBW ≥ OBW if possible; otherwise, set RBW to the largest available value. Set VBW ≥ RBW. Set detector = peak or average. The zero-span measurement method shall not be used unless both RBW and VBW are > 50/T and the number of sweep points across duration T exceeds 100. (For example, if VBW and/or RBW are limited to 3 MHz, then the zero-span method of measuring duty cycle shall not be used if T ≤ 16.7 microseconds.)

The transmitter output is connected to the Spectrum Analyzer. We tested accroding to the zero-span measurement method, 6.0)b) in KDB 558074

The largest availble value of RBW is 8 MHz and VBW is 50 MHz. The zero-span method of measuring duty cycle shall not be used if T ≤ 6.25 microseconds. (50/6.25 = 8)

The zero-span method was used because all measured T data are > 6.25 microseconds and both RBW and VBW are > 50/T.

The RF output of EUT was connected to the spectrum analyzer by RF cable and attenuator.
The path loss was compensated to the results for each measurement.
Set to the maximum power setting and enable the EUT transmit continuously.
The EUT was operating in controlled its channel.
Use the following spectrum analyzer settings:
Span = Zero Span
RBW = 8MHz(the largest available value)
VBW = 8MHz (≥ RBW)
Number of points in Sweep >100
Detector function = peak
Trace = Clear write
Measure $T_{total}$ and $T_{on}$
Calculate Duty Cycle = $T_{on}$ / $T_{total}$

### 7.4.6 Test Results

| | | | |
|---|---|---|---|
| EUT: | 19.5 Tablet | Model No.: | CTYV195A |
| Temperature: | 20 ℃ | Relative Humidity: | 48% |
| Test Mode: | Mode2/Mode3/Mode4 | Test By: | Allen Liu |

Test data reference attachment.

## 7.5 PEAK OUTPUT POWER

### 7.5.1 Applicable Standard

According to FCC Part 15.247(b)(3) and KDB 558074 D01 15.247 Meas Guidance v05r02 Section 8.3.1.

### 7.5.2 Conformance Limit

The maximum peak conducted output power of the intentional radiator for systems using digital modulation in the 2400 - 2483.5 MHz bands shall not exceed: 1 Watt (30dBm). If transmitting antenna of directional gain greater than 6dBi is used, the peak output power from the intentional radiator shall be reduced below the above stated value by the amount in dB that the directional gain of the antenna exceeds 6 dBi. In case of point-to-point operation, the limit has to be reduced by 1dB for every 3dB that the directional gain of the antenna exceeds 6dBi.

### 7.5.3 Measuring Instruments

The Measuring equipment is listed in the section 6.3 of this test report.

### 7.5.4 Test Setup

Please refer to Section 6.1 of this test report.

### 7.5.5 Test Procedure

The testing follows Subclause 11.9.1.1 of ANSI C63.10
The RF output of EUT was connected to the spectrum analyzer by RF cable and attenuator.
The path loss was compensated to the results for each measurement.
Set to the maximum power setting and enable the EUT transmit continuously.
The EUT was operating in controlled its channel.
Use the following spectrum analyzer settings:
Set the RBW ≧DTS bandwidth.
Set VBW =3*RBW.
Set the span ≧3*RBW
Set Sweep time = auto couple.
Set Detector = peak.
Set Trace mode = max hold.
Allow trace to fully stabilize.
Use peak marker function to determine the peak amplitude level.

### 7.5.6 Test Results

| | | | |
|---|---|---|---|
| EUT: | 19.5 Tablet | Model No.: | CTYV195A |
| Temperature: | 20 ℃ | Relative Humidity: | 48% |
| Test Mode: | Mode2/Mode3/Mode4 | Test By: | Allen Liu |

Test data reference attachment.

## 7.6 POWER SPECTRAL DENSITY

### 7.6.1 Applicable Standard

According to FCC Part 15.247(e) and KDB 558074 D01 15.247 Meas Guidance v05r02 Section 8.4.

### 7.6.2 Conformance Limit

The transmitter power spectral density conducted from the transmitter to the antenna shall not be greater than 8 dBm in any 3 kHz band during any time interval of continuous transmission.

### 7.6.3 Measuring Instruments

The Measuring equipment is listed in the section 6.3 of this test report.

### 7.6.4 Test Setup

Please refer to Section 6.1 of this test report.

### 7.6.5 Test Procedure

The testing follows Measurement Procedure Subclause 11.10.2 of ANSI C63.10
This procedure shall be used if maximum peak conducted output power was used to demonstrate compliance, and is optional if the maximum conducted (average) output power was used to demonstrate compliance.

The RF output of EUT was connected to the spectrum analyzer by RF cable and attenuator.
The path loss was compensated to the results for each measurement.
Set to the maximum power setting and enable the EUT transmit continuously.
The EUT was operating in controlled its channel.
a) Set analyzer center frequency to DTS channel center frequency.
b) Set the span to 1.5*DTS bandwidth.
c) Set the RBW to: 3 kHz ≤ RBW ≤ 100 kHz.
d) Set the VBW ≥ 3 RBW.
e) Detector = peak.
f) Sweep time = auto couple.
g) Trace mode = max hold.
h) Allow trace to fully stabilize.
i) Use the peak marker function to determine the maximum amplitude level within the RBW.
j) If measured value exceeds limit, reduce RBW (no less than 3 kHz) and repeat.

### 7.6.6 Test Results

| | | | |
|---|---|---|---|
| EUT: | 19.5 Tablet | Model No.: | CTYV195A |
| Temperature: | 20 ℃ | Relative Humidity: | 48% |
| Test Mode: | Mode2/Mode3/Mode4 | Test By: | Allen Liu |

Test data reference attachment.

## 7.7 CONDUCTED BAND EDGE MEASUREMENT

### 7.7.1 Applicable Standard

According to FCC Part 15.247(d) and KDB 558074 D01 15.247 Meas Guidance v05r02 Section 8.7.

### 7.7.2 Conformance Limit

In any 100 kHz bandwidth outside the frequency band in which the spread spectrum or digitally modulated intentional radiator is operating, the radio frequency power that is produced by the intentional radiator shall be at least 20 dB below that in the 100 kHz bandwidth within the band that contains the highest level of the desired power, based on either an RF conducted or a radiated measurement, provided the transmitter demonstrates compliance with the peak conducted power limits. If the transmitter complies with the conducted power limits based on the use of RMS averaging over a time interval, as permitted under paragraph (b)(3) of this section, the attenuation required under this paragraph shall be 30 dB instead of 20 dB.

### 7.7.3 Measuring Instruments

The Measuring equipment is listed in the section 6.3 of this test report.

### 7.7.4 Test Setup

Please refer to Section 6.1 of this test report.

### 7.7.5 Test Procedure

The testing follows FCC KDB 558074 D01 15.247 Meas Guidance v05r02 Section 8.7.
The RF output of EUT was connected to the spectrum analyzer by RF cable and attenuator.
The path loss was compensated to the results for each measurement.
Set to the maximum power setting and enable the EUT transmit continuously.
The EUT was operating in controlled its channel.
Set RBW to 100 kHz and VBW of spectrum analyzer to 300 kHz with a convenient frequency span including 100 kHz bandwidth from band edge.
Measure the highest amplitude appearing on spectral display and set it as a reference level. Plot the graph with marking the highest point and edge frequency.
Repeat above procedures until all measured frequencies were complete.

### 7.7.6 Test Results

| | | | |
|---|---|---|---|
| EUT: | 19.5 Tablet | Model No.: | CTYV195A |
| Temperature: | 20 ℃ | Relative Humidity: | 48% |
| Test Mode: | Mode2/Mode4 | Test By: | Allen Liu |

Test data reference attachment.

## 7.8 SPURIOUS RF CONDUCTED EMISSIONS

### 7.8.1 Conformance Limit

1. Below -20dB of the highest emission level in operating band.
2. Fall in the restricted bands listed in section 15.205. The maximum permitted average field strength is listed in section 15.209.

### 7.8.2 Measuring Instruments

The Measuring equipment is listed in the section 6.3 of this test report.

### 7.8.3 Test Setup

Please refer to Section 6.1 of this test report.

### 7.8.4 Test Procedure

The Spurious RF conducted emissions compliance of RF radiated emission should be measured by following the guidance in ANSI C63.10-2013 with respect to maximizing the emission by rotating the EUT, measuring the emission while the EUT is situated in three orthogonal planes (if appropriate), adjusting the measurement antenna height and polarization etc. Set RBW=100kHz and VBW= 300KHz to measure the peak field strength , and measure frequency range from 30MHz to 26.5GHz.

### 7.8.5 Test Results

Remark: The measurement frequency range is from 30MHz to the 10th harmonic of the fundamental frequency. The lowest, middle and highest channels are tested to verify the spurious emissions and bandege measurement data.

Test data reference attachment.

## 7.9 ANTENNA APPLICATION

### 7.9.1 Antenna Requirement

15.203 requirement: For intentional device, according to 15.203: an intentional radiator shall be designed to ensure that no antenna other than that furnished by the responsible party shall be used with the device.

### 7.9.2 Result

The EUT antenna is permanent attached FPC antenna (Gain: 2.57dBi). It comply with the standard requirement.

# 8 TEST RESULTS

## 8.1 MAXIMUM CONDUCTED OUTPUT POWER

| Condition | Mode | Frequency (MHz) | Antenna | Conducted Power (dBm) | Limit (dBm) | Verdict |
|---|---|---|---|---|---|---|
| NVHT | BLE | 2402 | Ant 1 | 6.114 | 30 | Pass |
| NVHT | BLE | 2440 | Ant 1 | 7.162 | 30 | Pass |
| NVHT | BLE | 2480 | Ant 1 | 7.195 | 30 | Pass |

Power NVHT BLE 2402MHz Ant1

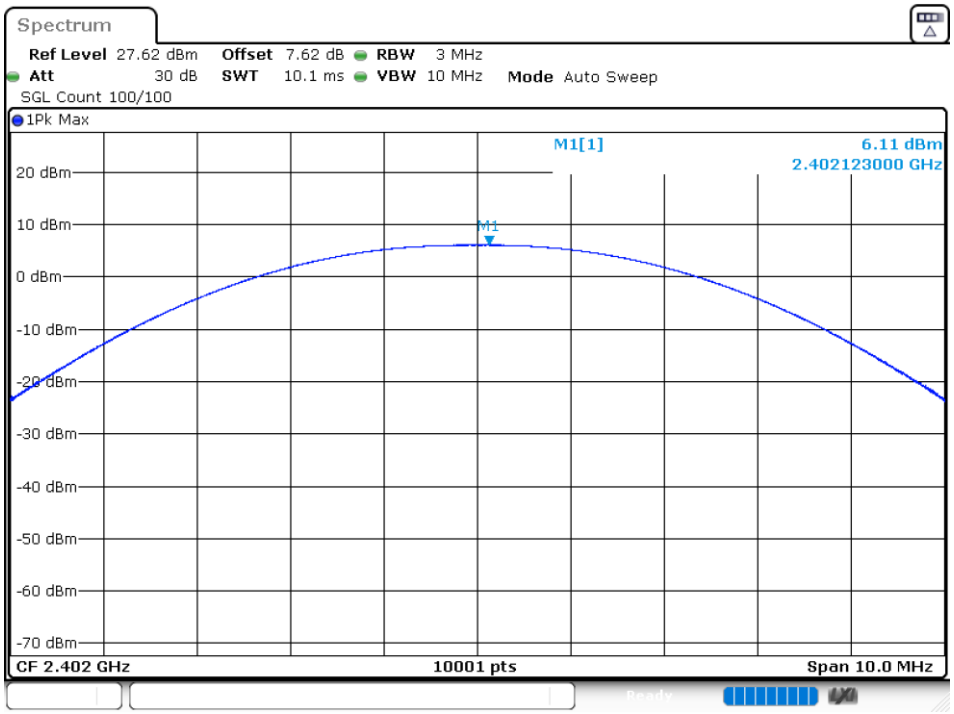

Power NVHT BLE 2440MHz Ant1

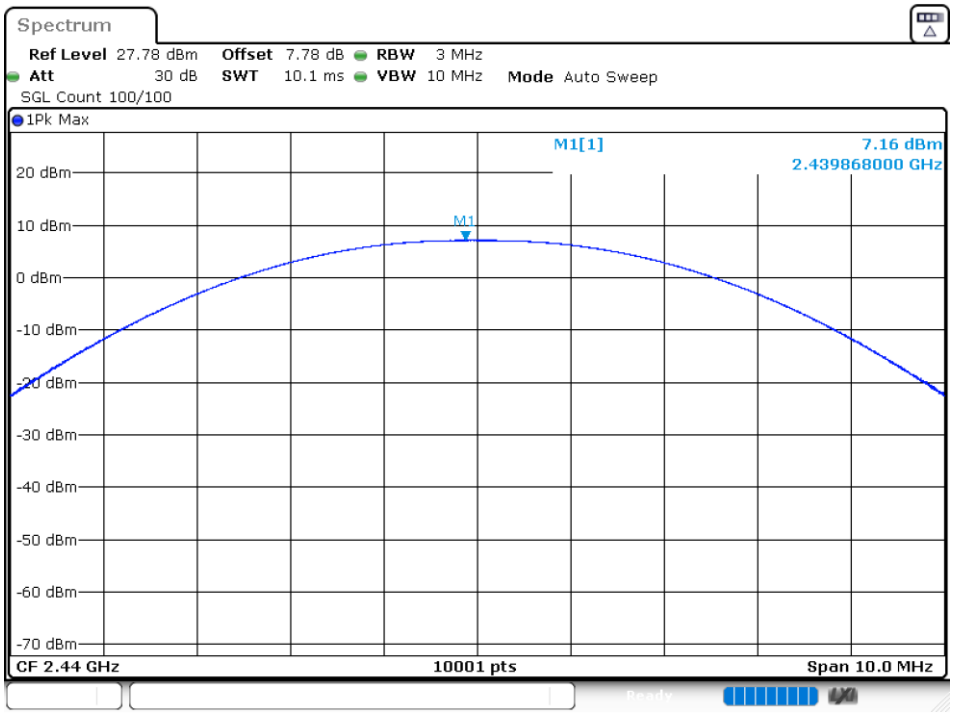


Power NVHT BLE 2480MHz Ant1

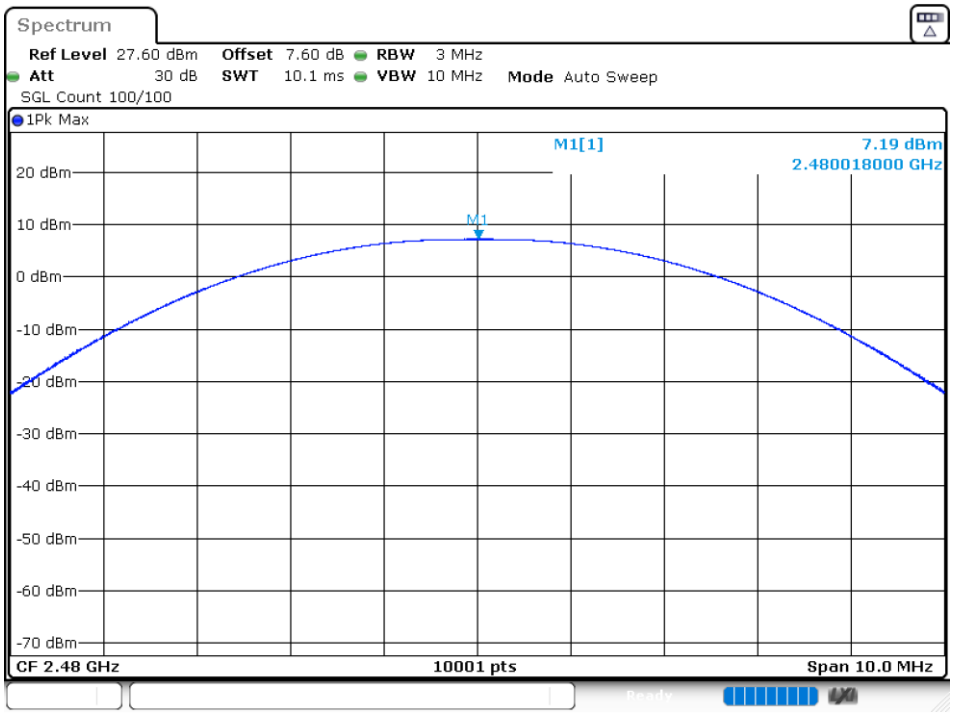

## 8.2 OCCUPIED CHANNEL BANDWIDTH

| Condition | Mode | Frequency (MHz) | Antenna | 99% OBW (MHz) | -6 dB Bandwidth (MHz) | Limit -6 dB Bandwidth (MHz) | Verdict |
|---|---|---|---|---|---|---|---|
| NVHT | BLE | 2402 | Ant 1 | 1.0253 | 0.6936 | 0.5 | Pass |
| NVHT | BLE | 2440 | Ant 1 | 1.0257 | 0.7006 | 0.5 | Pass |
| NVHT | BLE | 2480 | Ant 1 | 1.0237 | 0.7044 | 0.5 | Pass |

OBW NVHT BLE 2402MHz Ant1

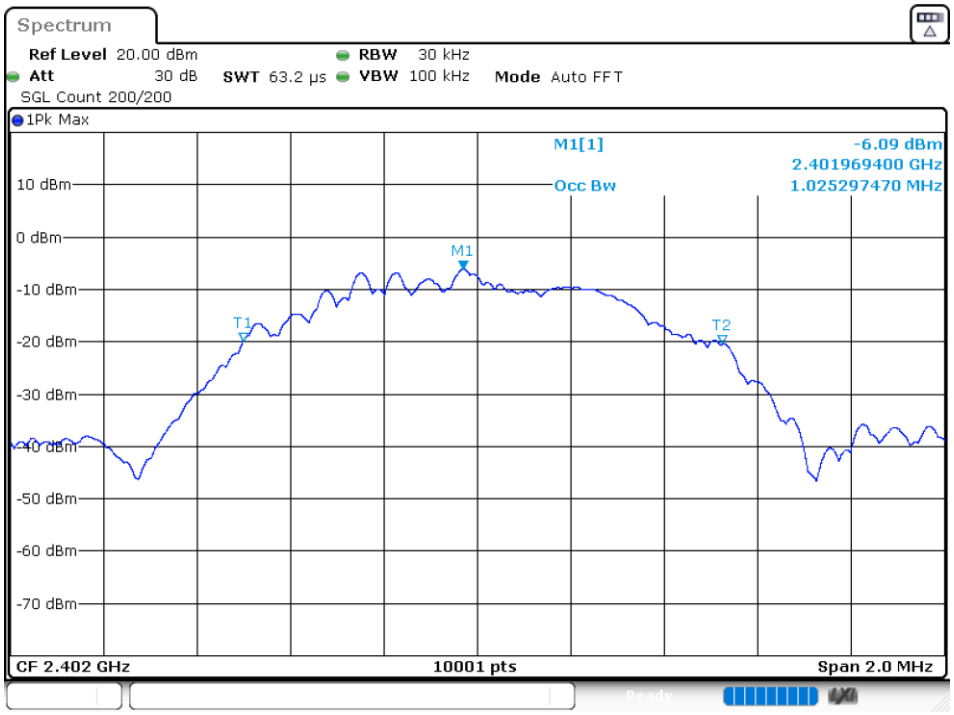

-6 dB BW NVHT BLE 2402MHz Ant1

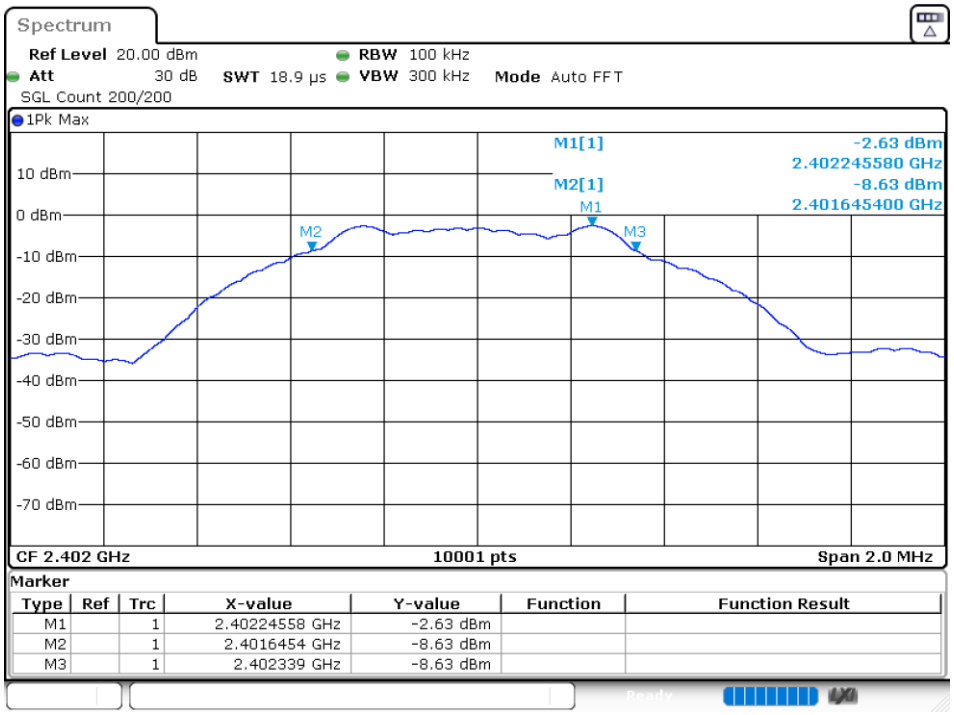


OBW NVHT BLE 2440MHz Ant1

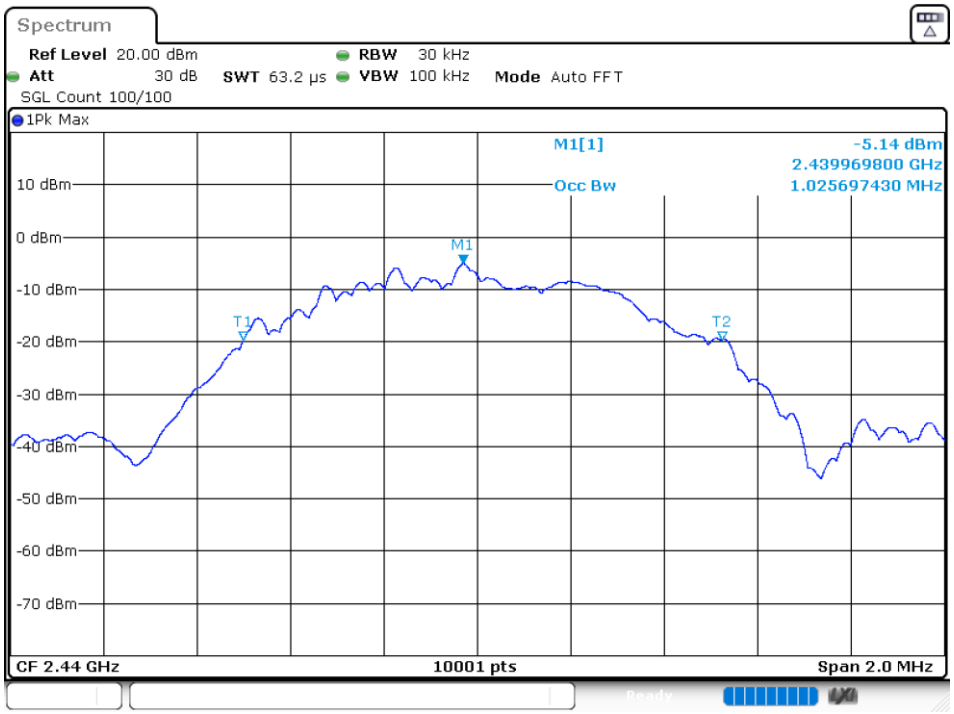

-6 dB BW NVHT BLE 2440MHz Ant1

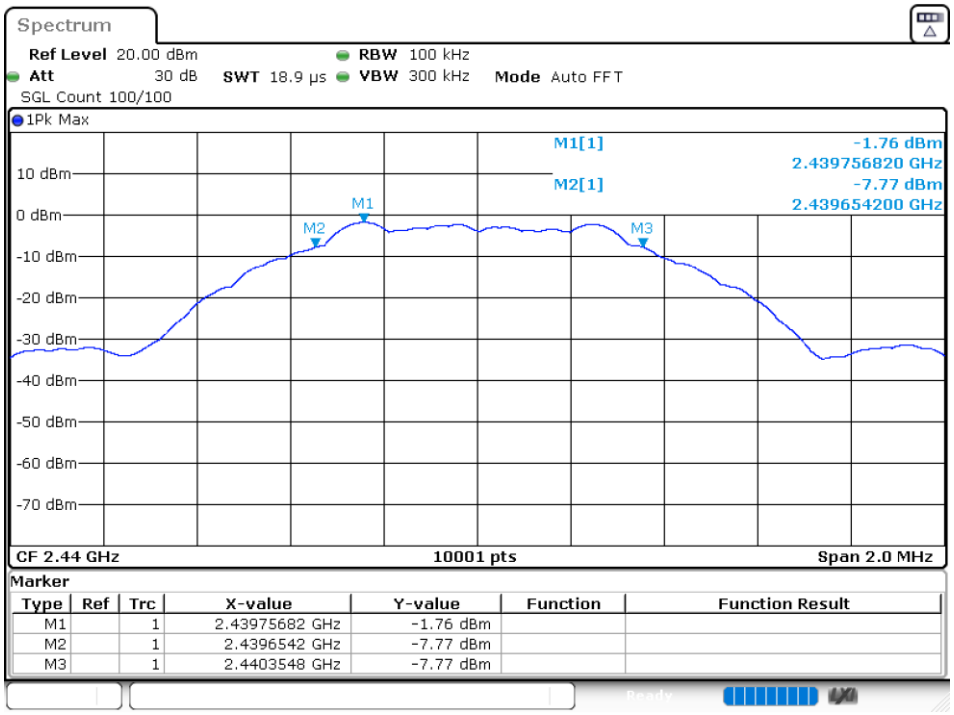


OBW NVHT BLE 2480MHz Ant1

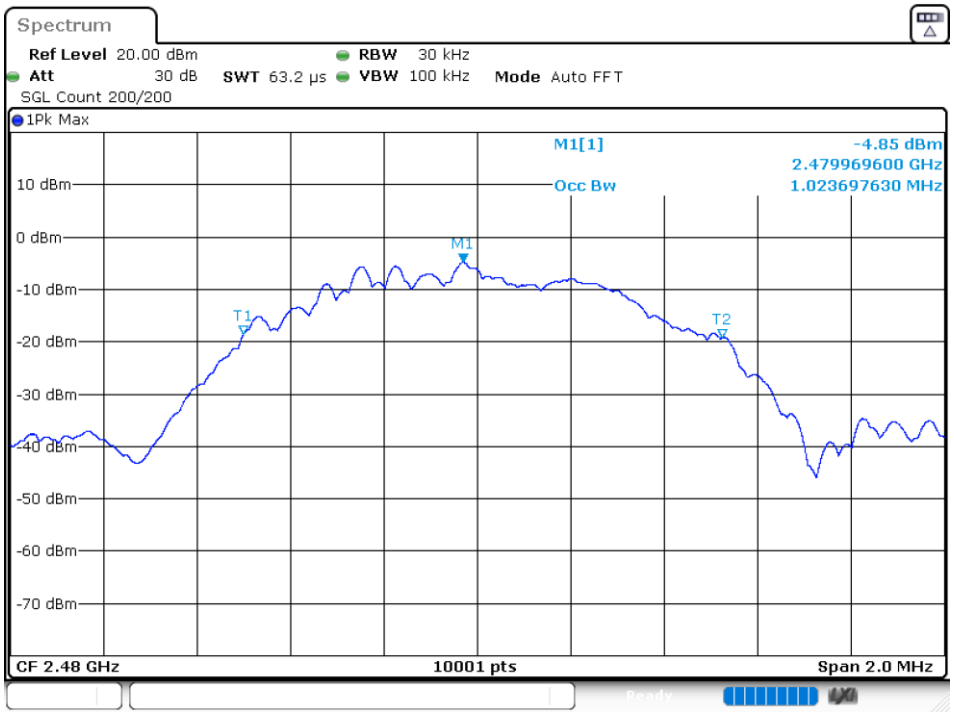

-6 dB BW NVHT BLE 2480MHz Ant1

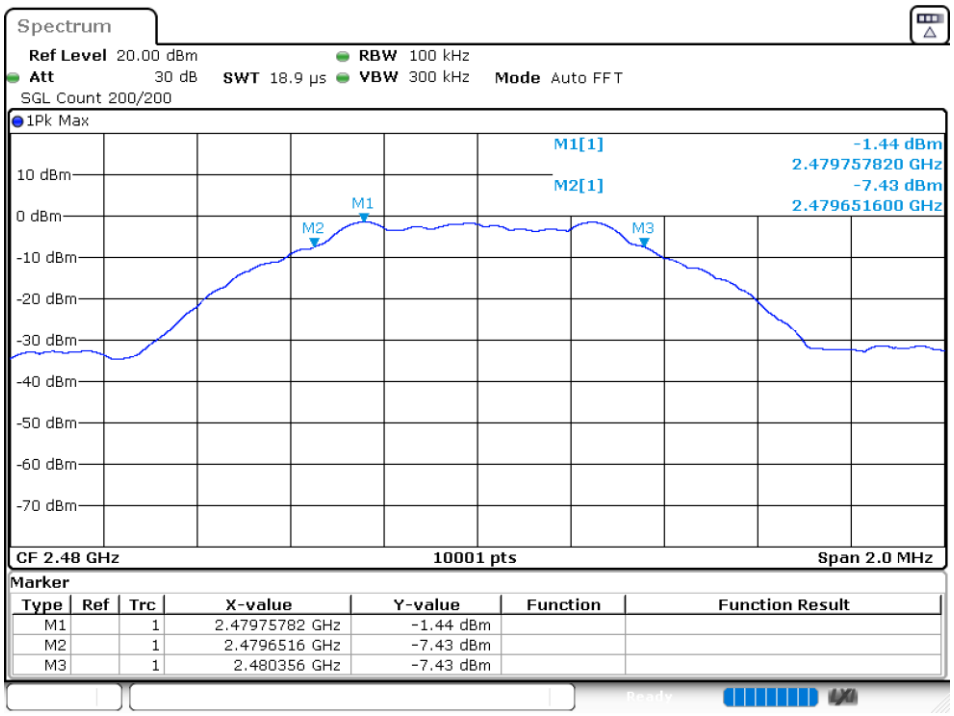

## 8.3 MAXIMUM POWER SPECTRAL DENSITY LEVEL

| Condition | Mode | Frequency (MHz) | Antenna | Max PSD (dBm/3kHz) | Limit (dBm/3kHz) | Verdict |
|---|---|---|---|---|---|---|
| NVHT | BLE | 2402 | Ant 1 | -9.797 | 8 | Pass |
| NVHT | BLE | 2440 | Ant 1 | -8.761 | 8 | Pass |
| NVHT | BLE | 2480 | Ant 1 | -8.633 | 8 | Pass |

PSD NVHT BLE 2402MHz Ant1

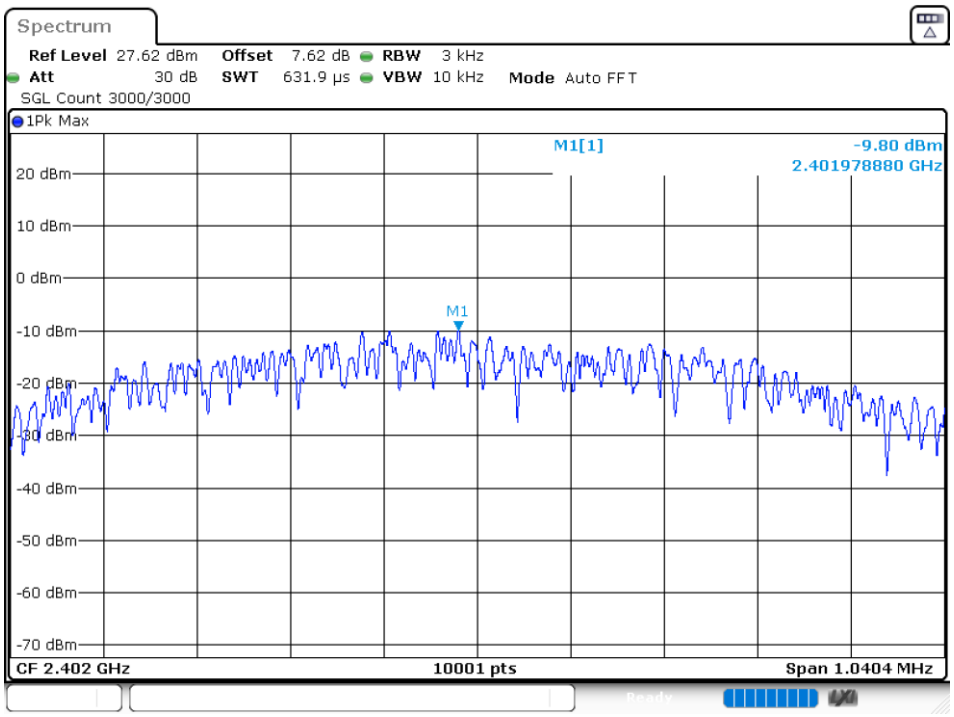

PSD NVHT BLE 2440MHz Ant1

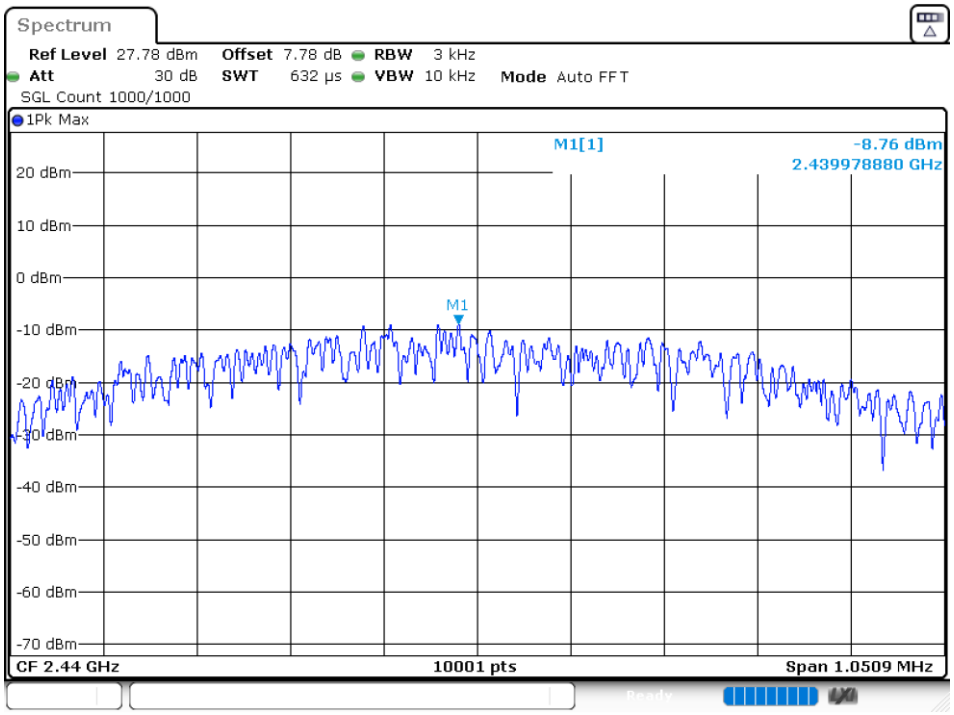


PSD NVHT BLE 2480MHz Ant1

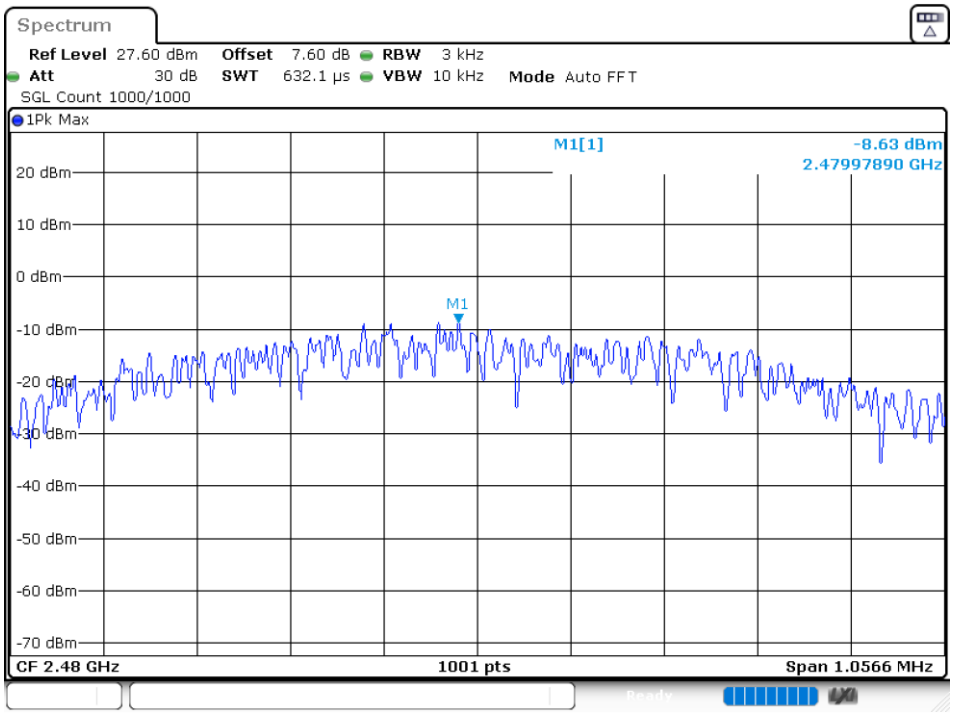

## 8.4 BAND EDGE

| Condition | Mode | Frequency (MHz) | Antenna | Max Value (dBc) | Limit (dBc) | Verdict |
|---|---|---|---|---|---|---|
| NVHT | BLE | 2402 | Ant 1 | -56.82 | -20 | Pass |
| NVHT | BLE | 2480 | Ant 1 | -58.89 | -20 | Pass |

Band Edge NVHT BLE 2402MHz Ant1 Ref

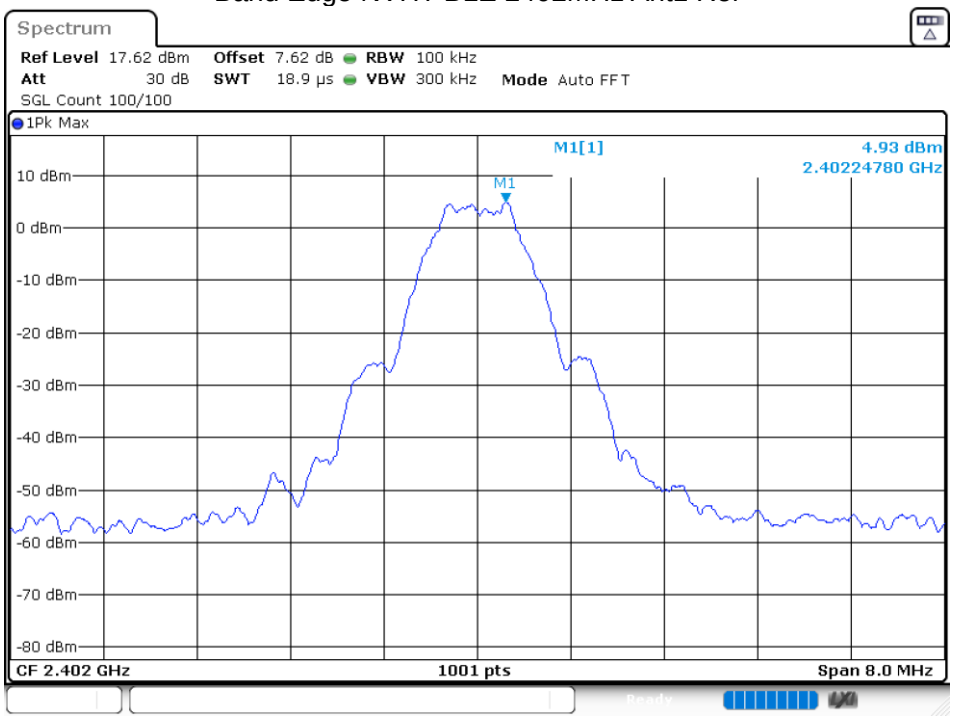


Band Edge NVHT BLE 2402MHz Ant1 Emission

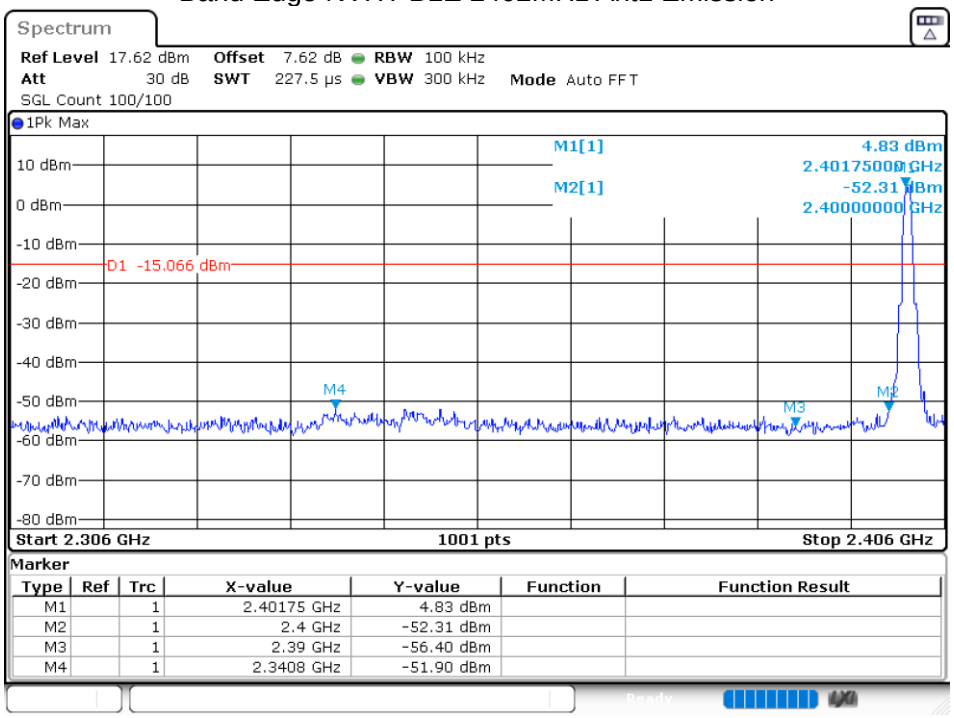

Band Edge NVHT BLE 2480MHz Ant1 Ref

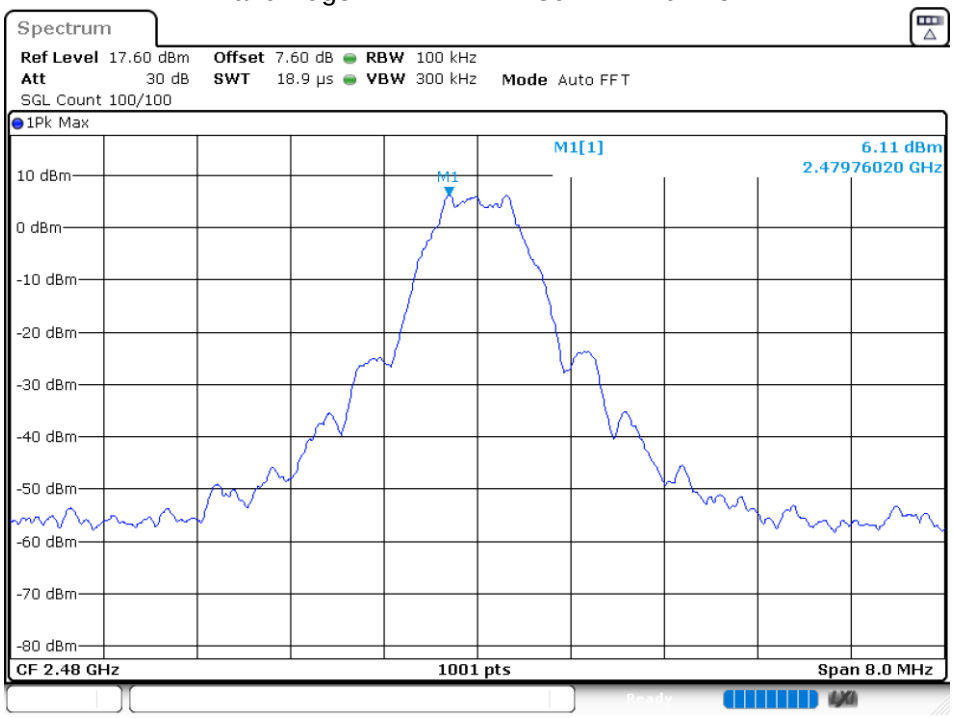


Band Edge NVHT BLE 2480MHz Ant1 Emission

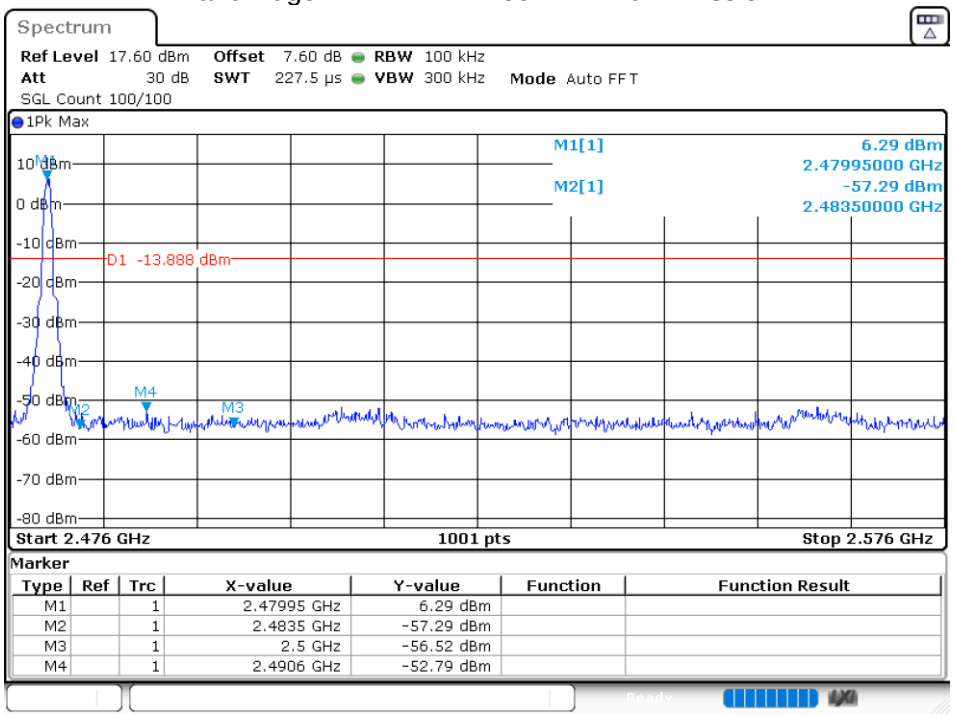


Marker

| Type | Ref | Trc | X-value | Y-value | Function | Function Result |
|---|---|---|---|---|---|---|
| M1 | | 1 | 2.47995 GHz | 6.29 dBm | | |
| M2 | | 1 | 2.4835 GHz | -57.29 dBm | | |
| M3 | | 1 | 2.5 GHz | -56.52 dBm | | |
| M4 | | 1 | 2.4906 GHz | -52.79 dBm | | |

## 8.5 CONDUCTED RF SPURIOUS EMISSION

| Condition | Mode | Frequency (MHz) | Antenna | Max Value (dBc) | Limit (dBc) | Verdict |
|---|---|---|---|---|---|---|
| NVHT | BLE | 2402 | Ant 1 | -49.22 | -20 | Pass |
| NVHT | BLE | 2440 | Ant 1 | -50.68 | -20 | Pass |
| NVHT | BLE | 2480 | Ant 1 | -50.23 | -20 | Pass |

Tx. Spurious NVHT BLE 2402MHz Ant1 Ref

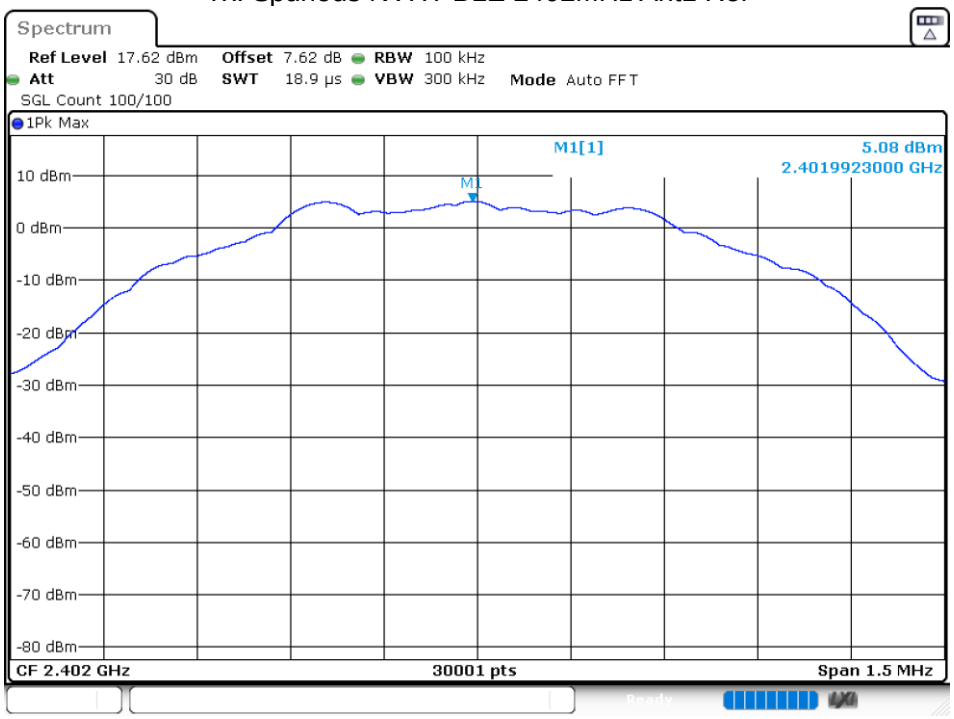

Tx. Spurious NVHT BLE 2402MHz Ant1 Emission

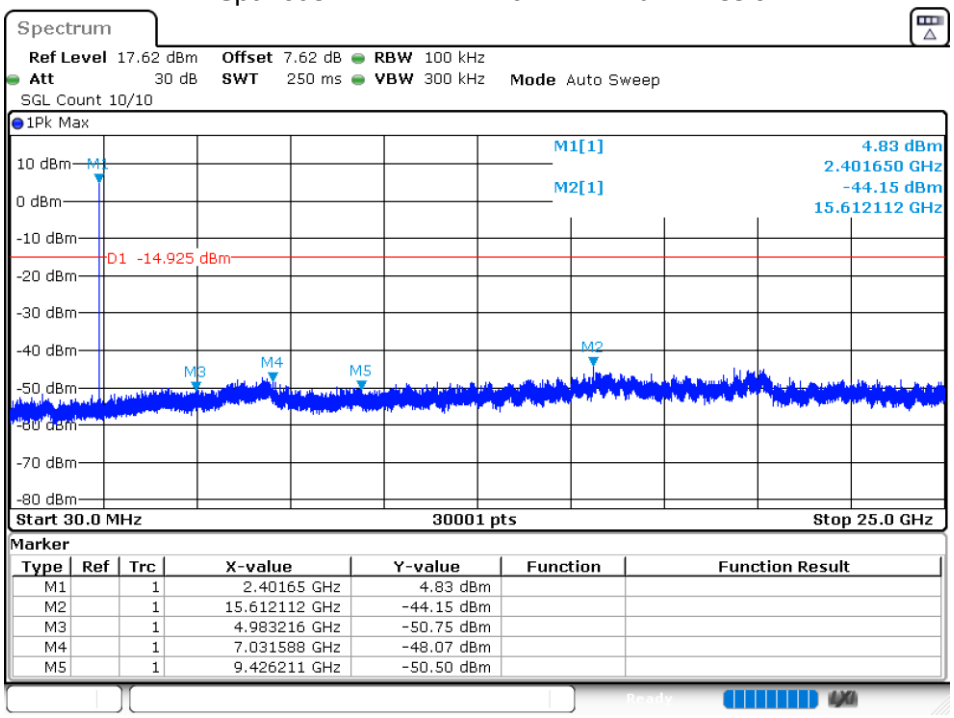


Marker

| Type | Ref | Trc | X-value | Y-value | Function | Function Result |
|---|---|---|---|---|---|---|
| M1 | | 1 | 2.40165 GHz | 4.83 dBm | | |
| M2 | | 1 | 15.612112 GHz | -44.15 dBm | | |
| M3 | | 1 | 4.983216 GHz | -50.75 dBm | | |
| M4 | | 1 | 7.031588 GHz | -48.07 dBm | | |
| M5 | | 1 | 9.426211 GHz | -50.50 dBm | | |

Tx. Spurious NVHT BLE 2440MHz Ant1 Ref

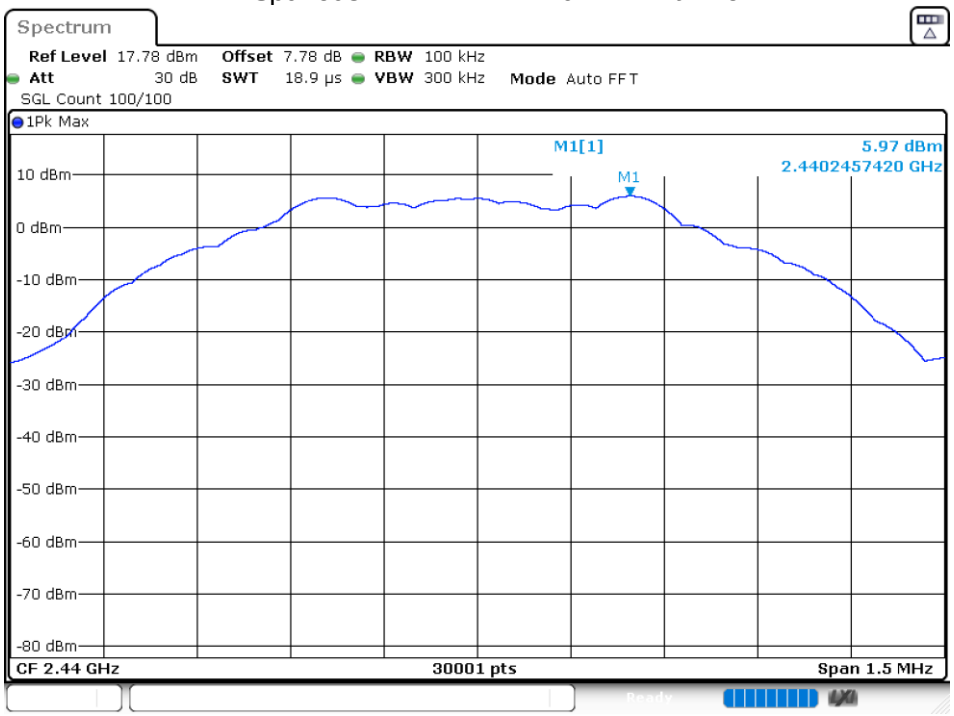

Tx. Spurious NVHT BLE 2440MHz Ant1 Emission

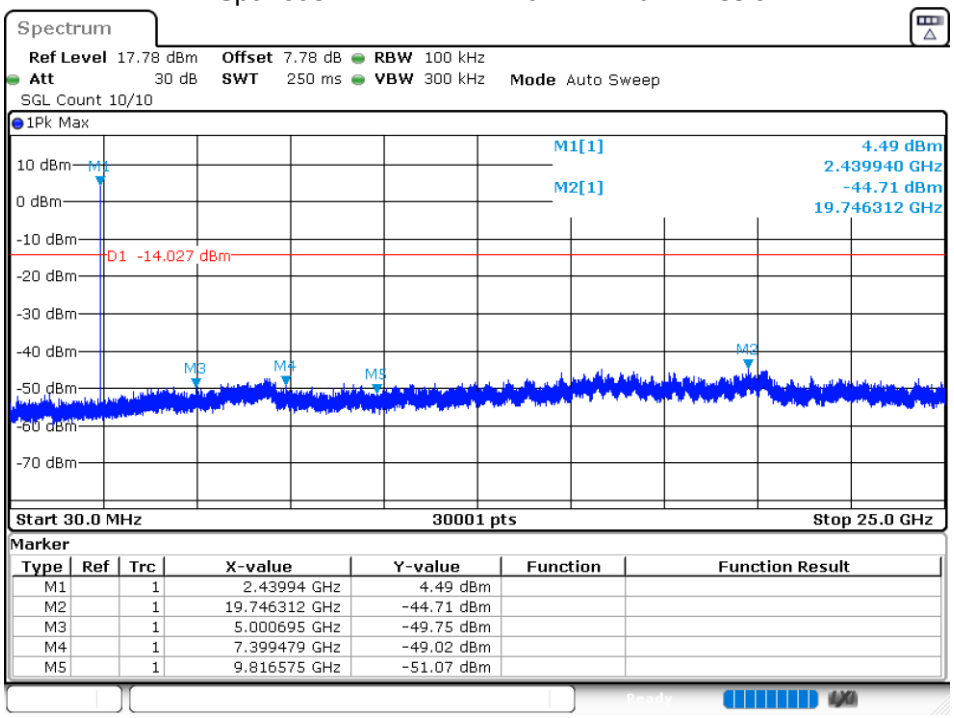


Marker

| Type | Ref | Trc | X-value | Y-value | Function | Function Result |
|---|---|---|---|---|---|---|
| M1 | | 1 | 2.43994 GHz | 4.49 dBm | | |
| M2 | | 1 | 19.746312 GHz | -44.71 dBm | | |
| M3 | | 1 | 5.000695 GHz | -49.75 dBm | | |
| M4 | | 1 | 7.399479 GHz | -49.02 dBm | | |
| M5 | | 1 | 9.816575 GHz | -51.07 dBm | | |

Tx. Spurious NVHT BLE 2480MHz Ant1 Ref

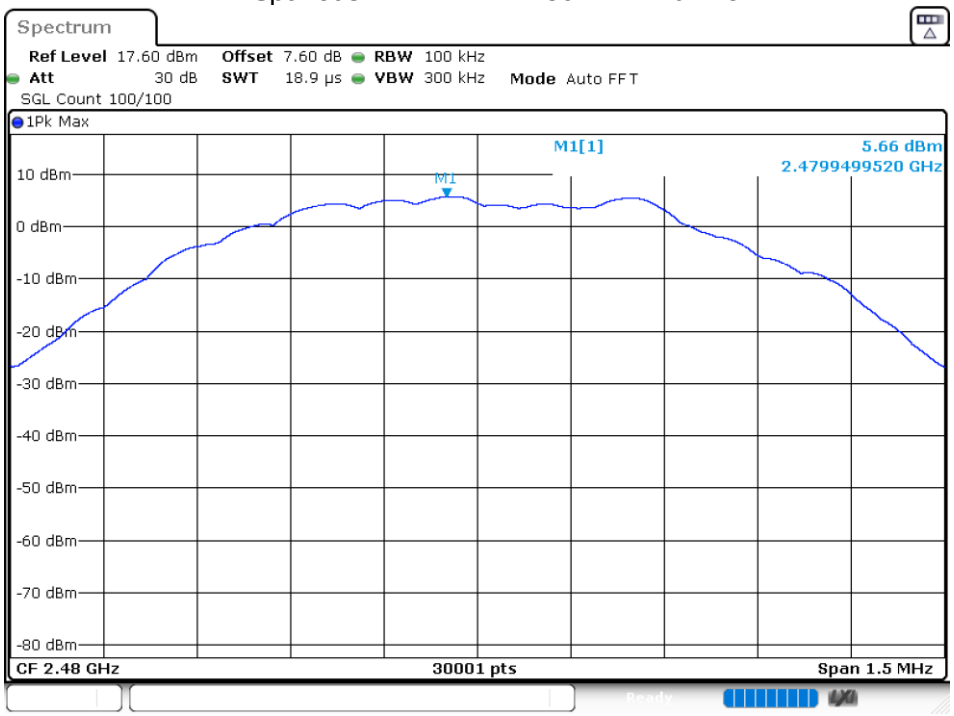

Tx. Spurious NVHT BLE 2480MHz Ant1 Emission

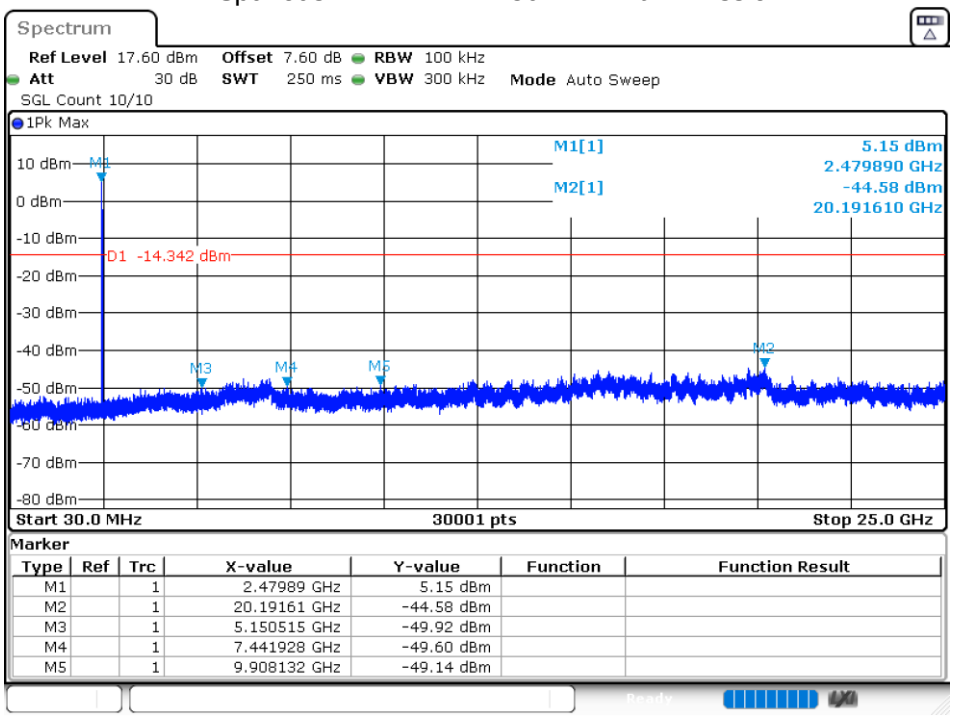


Marker

| Type | Ref | Trc | X-value | Y-value | Function | Function Result |
|---|---|---|---|---|---|---|
| M1 | | 1 | 2.47989 GHz | 5.15 dBm | | |
| M2 | | 1 | 20.19161 GHz | -44.58 dBm | | |
| M3 | | 1 | 5.150515 GHz | -49.92 dBm | | |
| M4 | | 1 | 7.441928 GHz | -49.60 dBm | | |
| M5 | | 1 | 9.908132 GHz | -49.14 dBm | | |

END OF REPORT