TEST REPORT

Applicant	:	Mekotronics Co., Ltd
Address	:	Rm1103-1105, Hengrong Lifang Building, Baomin 2nd Rd, Baoan District, Shenzhen, Guangdong, China
Manufacturer	:	Mekotronics Co., Ltd
Address	:	Rm1103-1105, Hengrong Lifang Building, Baomin 2nd Rd, Baoan District, Shenzhen, Guangdong, China
Product Name	:	Media player
Model Number	:	R58X-POE, R58X, R58X-Armour, SparkBridge+, SparkBridge+ POE, SparkBridge+ Armour, SparkBridge+ Armour POE
Trademark	:	Mekotronics
FCC ID	:	2AWPH-R58X-POE
Test Date	:	Apr. 10, 2026 to Apr. 30, 2026
Date of Report	:	Apr. 30, 2026
Test Result	:	This device described above has been tested by BKC, and the test results show that the equipment under test (EUT) is in compliance with the Standard requirements. And it is applicable only to the tested sample identified in the report.

Test Procedure Used:

Standards : FCC CFR47 Part 15 Section 15.407
ANSI C63.10:2020+Cor1:2023
, KDB 789033 D02 v02r01
KDB 905462 D02 UNII DFS Compliance Procedures New Rules v02
KDB 905462 D03 Client Without DFS New Rules v01r02

Prepared by(Test Engineer):
Sten Huang

Reviewer(Supervisor):
Casey Wang

Approved(Manager):
Jerry Liao

TABLE OF CONTENT

1. General Information 4
1.1. Description of Device (EUT) 4
1.2. Channel List 4
1.3. Summary of test result 5
1.4. Special Accessories and Auxiliary Equipment 5
1.5. Test mode 5
1.6. Test Conditions 6
1.7. Measurement Uncertainty (95% confidence levels, k=2) 6
1.8. Test Facility 7
1.9. Test Equipment 7
2. Technical Requirements for DFS 8
2.1. Applicability of DFS Requirements 8
2.2 DFS Detection Thresholds and Response Requirement 8
2.3 Radar Test Waveforms 9
3. Conducted test procedure 17
3.1. Test Result 17
4. Test Photographs 21

Revision History of This Test Report		
Report Number	Description	Issued Date
BKC26041837DE-5	Initial Issue	2026-04-30

1. General Information

1.1.Description of Device (EUT)

EUT Name	:	Media player
Model No.	:	R58X-POE, R58X, R58X-Armour, SparkBridge+, SparkBridge+ POE, SparkBridge+ Armour, SparkBridge+ Armour POE
Model Difference	:	Only the exterior color and silk screen are different; everything else is the same
Power supply	:	Input: AC 120V/60Hz DC 12V from Adapter
Wi-Fi Specification	:	IEEE 802.11a/b/g/n/ac/ax
Operation frequency	:	IEEE 802.11a/n/ac/ax(20M): 5150MHz ~5250MHz/ 4 channel IEEE 802.11n/ac/ax(40M): 5150MHz ~5250MHz/ 2 channel IEEE 802.11ac/ax(80M): 5150MHz ~5250MHz/ 1 channel IEEE 802.11a/n/ac/ax(20M): 5250MHz ~5350 MHz/ 4 channel IEEE802.11n/ac/ax(40M): 5250MHz ~5350 MHz/ 2 channel IEEE802.11ac/ax(80M): 5250MHz ~5350 MHz/ 1 channel IEEE 802.11a/n/ac/ax(20M): 5470MHz ~5725 MHz/ 11 channel IEEE802.11n/ac/ax(40M): 5470MHz ~5725 MHz/ 5 channel IEEE802.11ac/ax(80M): 5470MHz ~5725 MHz/ 3 channel IEEE 802.11a/n/ac/ax(20M): 5725MHz ~5850MHz/ 5 channel IEEE 802.11n/ac/ax(40M): 5725MHz ~5850MHz/ 2 channel IEEE 802.11ac/ax(80M): 5725MHz ~5850MHz/ 1 channel
Modulation	:	Orthogonal Frequency Division Multiplexing Access(OFDMA)
Antenna Type	:	Rubber, Maximum Gain is 1.7 dBi
Device type	:	Slave Device(without Radar Detection)

1.2.Channel List

For 802.11a/n/ac/ax(20M) Operation in the 5250MHz ~5350 MHz band			
Channel	Frequency	Channel	Frequency
52	5260MHz	60	5300MHz
56	5280MHz	64	5320MHz
For 802.11a/n/ac(20M) Operation in the 5470MHz ~5725 MHz band			
Channel	Frequency	Channel	Frequency
100	5500MHz	124	5620 MHz
104	5520MHz	128	5640 MHz
108	5540MHz	132	5660 MHz
112	5560MHz	136	5680MHz
116	5580MHz	140	5700MHz
120	5600 MHz		

For 802.11n/ac/ax(40M) Operation in the 5250MHz ~5350 MHz band			
Channel	Frequency	Channel	Frequency
54	5270MHz	62	5310MHz
For 802.11n/ac/ax(40M) Operation in the 5470MHz ~5725 MHz band			
Channel	Frequency	Channel	Frequency
102	5510MHz	126	5630MHz

110	5550MHz	134	5670MHz
118	5590MHz		

For 802.11ac/ax(80M) Operation in the 5250MHz ~5350 MHz band			
Channel	Frequency	Channel	Frequency
58	5290MHz	NA	NA
For 802.11ac/ax(80M) Operation in the 5470MHz ~5725 MHz band			
Channel	Frequency	Channel	Frequency
106	5530MHz	122	5640MHz
122	5610 MHz		

1.3.Summary of test result

Test Item	Test Requirement	Test method	Result
DFS Detection Threshold	47 CFR Part 15 Subpart E Section 15.407 (h)(2)	KDB 905462 D02	N/A
Channel Availability Check Time	47 CFR Part 15 Subpart E Section 15.407 (h)(2)(ii)	KDB 905462 D02	N/A
U-NII Detection Bandwidth	47 CFR Part 15 Subpart E Section 15.407 (h)(2)	KDB 905462 D02	N/A
Channel Closing Transmission Time	47 CFR Part 15 Subpart E Section 15.407 (h)(2)(iii)	KDB 905462 D02	PASS
Channel Move Time	47 CFR Part 15 Subpart E Section 15.407 (h)(2)(iii)	KDB 905462 D02	PASS
Non-Occupancy Period	47 CFR Part 15 Subpart E Section 15.407 (h)(2)(iv)	KDB 905462 D02	PASS

Remark:
The tested sample and the sample information are provided by the client.
Tx: In this whole report Tx (or tx) means Transmitter.
Rx: In this whole report Rx (or rx) means Receiver.
RF: In this whole report RF means Radiated Frequency.
CH: In this whole report CH means channel.
Volt: In this whole report Volt means Voltage.
Temp: In this whole report Temp means Temperature.
Humid: In this whole report Humid means humidity.
Press: In this whole report Press means Pressure.
N/A: In this whole report not application.
Measurement Uncertainty is not taken into account for conformity statement

1.4.Special Accessories and Auxiliary Equipment

Description	Manufacturer	Model No.	Hardware Version	Software Version	FCC ID
wireless router	cudy	WR11000	/	/	2APRGWR11000

1.5.Test mode

The special RF test software was used to control EUT work in Continuous WIFI TX mode, and select test channel, wireless mode.

802.11a/n/ac/ax(20 M)	5250MHz ~5350 MHz	Channel 52	Channel 56	Channel 64
		5260MHz	5280MHz	5320MHz
802.11n/ac/ax(40M)	5250MHz ~5350 MHz	Channel54	N/A	Channel62
		5270MHz	N/A	5310MHz
802.11ac/ax(80M)	5250MHz ~5350 MHz	N/A	Channel 58	N/A
		N/A	5290MHz	N/A
802.11a/n/ac/ax(20 M)	5470MHz ~5725 MHz	Channel 100	Channel116	Channel140
		5500MHz	5580MHz	5700MHz
802.11n/ac/ax(40M)	5470MHz ~5725 MHz	Channel 102	Channel118	Channel 134
		5510MHz	5590MHz	5670MHz
802.11ac/ax(80M)	5470MHz ~5725 MHz	Channel 106	N/A	Channel 122
		5530MHz	N/A	5610MHz

1.6.Test Conditions

Category	Normal Conditions	Extreme Conditions
Temperature range	15-35℃	N/A
Humidity range	20-75%	N/A
Pressure range	86-106kPa	N/A
Power supply	DC 12V	N/A
Note: N/A is an abbreviation for Not Applicable.		

1.7.Measurement Uncertainty (95% confidence levels, k=2)

Item	MU	Remark
Uncertainty for radio frequency	±7×10-8	
Conducted Emissions (150kHz~30MHz)	±2.54dB	
Radiated Emission(9KHz~30MHz)	±1.6 dB	
Radiated Emission(30MHz~1GHz)	Vertical:±4.14dB Horizontal:±4.25dB	
Radiated Emission(1GHz~6GHz)	±3.9dB	
Radiated Emission(6GHz~18GHz)	±4.3dB	
Radiated Emission(18GHz~40GHz)	±3.38dB	
Uncertainty for conducted RF Power	±0.20dB	
Conducted spurious emissions	±0.24dB	
Uncertainty for temperature	0.6℃	
Uncertainty for humidity	1%	
Bandwidth	± 1.5 x 10-6	
Time	±2%	
Duty Cycle	±2%	
Remark: The coverage Factor (k=2), and measurement Uncertainty for a level of Confidence of 95%		

1.8.Test Facility

Site Description		
Name of Firm	:	Shenzhen BKC Testing Co., Ltd.
Site Location	:	Room 103, 1/F, Huaya Building, Huaya Industrial Park, Longhua Community, Longhua District, Shenzhen, Guangdong, China.
ISED CAB identifier	:	CN0188
ISED Company Number	:	34333
FCC Designation Number	:	CN1416
FCC Test Firm Registration Number	:	701543

1.9.Test Equipment

RF Test Site

Item	Kind of Equipment	Manufacturer	Type No.	Serial No.	Last calibration	Calibrated until
1	Spectrum	Agilent	N9020A	MY50510311	Mar. 09. 2025	Mar. 10. 2026
2	Vector source	Agilent	N5182A	MY47420223	Mar. 09. 2025	Mar. 10. 2026
3	All instrument	Rohde & Schwarz	CMW 500	101131	Mar. 09. 2025	Mar. 10. 2026
4	control unit	MW	MW100-RFCB	MW200411BK-34	Mar. 09. 2025	Mar. 10. 2026
5	RF Testing software	MW	MTS 8310	/	Mar. 09. 2025	/
6	Spectrum analyzer	R&S	FSP40	200061	Feb. 13. 2025	Feb. 12. 2026

Test software

Software name	RF Testing software
Software version	2.0.0.0
Software name	RE Testing software
Software version	EMEC-03A2 RE+
Software name	CE Testing software
Software version	EMEC-3A1+

2. Technical Requirements for DFS

2.1. Applicability of DFS Requirements

2.1.1 Applicability of DFS Requirements Prior to use of a Channel

Requirement	Operational Mode		
	Master	**Client Without Radar Detection**	**Client With Radar Detection**
Non-Occupancy Period	Yes	Not required	Not required
DFS Detection Threshold	Yes	Not required	Yes
Channel Availability Check Time	Yes	Not required	Not required
U-NII Detection Bandwidth	Yes	Not required	Yes

2.1.2 Applicability of DFS Requirements during Normal Operation

Requirement	Operational Mode	
	Master or Client With Radar Detection	**Client Without Radar Detection**
DFS Detection Threshold	Yes	Not required
Channel Closing Transmission Time	Yes	Yes
Channel Move Time	Yes	Yes
U-NII Detection Bandwidth	Yes	Not required

Additional requirements for devices with multiple bandwidth modes	Operational Mode	
	Master or Client With Radar Detection	**Client Without Radar Detection**
U-NII Detection Bandwidth and Statistical Performance Check	All BW modes must be tested	Not required
Channel Move Time and Channel Closing Transmission Time	Test using widest BW mode available	Test using the widest BW mode available for the link
All other tests	Any single BW mode	Not required
Note: Frequencies selected for statistical performance check (Section 7.8.4) should include several frequencies within the radar detection bandwidth and frequencies near the edge of the radar detection bandwidth. For 802.11 devices it is suggested to select frequencies in each of the bonded 20 MHz channels and the channel center frequency.		

2.2 DFS Detection Thresholds and Response Requirement

Below table provides the DFS Detection Thresholds for Master Devices as well as Client Devices incorporating In-Service Monitoring.

DFS Detection Thresholds for Master Devices and Client Devices With Radar Detection.

Maximum Transmit Power	Value (See Notes 1 , 2 and 3)
EIRP ≥ 200 milliwatt	-64 dBm
EIRP < 200 milliwatt and power spectral density < 10 dBm / MHz	-62 dBm
EIRP < 200 milliwatt and that do not meet the power spectral density requirement	-64 dBm
Note 1: This is the level at the input of the receiver assuming a 3.65 dBi receive antenna. Note 2: Throughout these test procedures an additional 1 dB has been added to the amplitude of the test transmission waveforms to account for variations in measurement equipment. This will ensure that the	

test signal is at or above the detection threshold level to trigger a DFS response. Note3: EIRP is based on the highest antenna gain. For MIMO devices refer to KDB Publication 662911 D01.

DFS Response Requirement Values

Parameter	Value
Non-occupancy period	Minimum 30 minutes.
Channel Availability Check Time	60 seconds.
Channel Move Time	10 seconds. (See Note 1.)
Channel Closing Transmission Time	200 milliseconds + an aggregate of 60 milliseconds over remaining 10 second period. (See Notes 1 and 2.)
U-NII Detection Bandwidth	Minimum 100% of the U- NII 99% transmission power bandwidth. (See Note 3.)
Note 1: Channel Move Time and the Channel Closing Transmission Time should be performed with Radar Type 0. The measurement timing begins at the end of the Radar Type 0 burst. Note 2: The Channel Closing Transmission Time is comprised of 200 milliseconds starting at the beginning of the Channel Move Time plus any additional intermittent control signals required to facilitate a Channel move (an aggregate of 60 milliseconds) during the remainder of the 10 second period. The aggregate duration of control signals will not count quiet periods in between transmissions. Note 3: During the U-NII Detection Bandwidth detection test, radar type 0 should be used. For each frequency step the minimum percentage of detection is 90 percent. Measurements are performed with no data traffic.	

2.3 Radar Test Waveforms

This section provides the parameters for required test waveforms, minimum percentage of successful detections, and the minimum number of trials that must be used for determining DFS conformance. Step intervals of 0.1 microsecond for Pulse Width, 1 microsecond for PRI, 1 MHz for chirp width and 1 for the number of pulses will be utilized for the random determination of specific test waveforms.

2.3.1 Short Pulse Radar Test Waveforms

Radar Type	Pulse Width (μsec)	PRI (μsec)	Number of Pulses	Minimum Percentage of Successful Detection	Minimum Number of Trials
0	1	1428	18	See Note1	See Note1
1		Test A: 15 unique PRI values randomly selected from the list of 23 PRI values in Table 5a	$\text{Roundup}\left\{\left(\frac{1}{360}\right)\cdot\left(\frac{19\cdot 10^6}{\text{PRI}_{\mu sec}}\right)\right\}$	60%	30
		Test B: 15 unique PRI values randomly			

		selected within the range of 518-3066 μsec, with a minimum increment of 1 μsec, excluding PRI values selected in Test A			
2	1-5	150-230	23-29	60%	30
3	6-10	200-500	16-18	60%	30
4	1-20	200-500	12-16	60%	30
Aggregate (Radar Types 1-4)				80%	120
Note 1: Short Pulse Radar Type 0 should be used for the detection bandwidth test, channel move time, and channel closing time tests.					

A minimum of 30 unique waveforms are required for each of the Short Pulse Radar Types 2 through 4. If more than 30 waveforms are used for Short Pulse Radar Types 2 through 4, then each additional waveform must also be unique and not repeated from the previous waveforms. If more than 30 waveforms are used for Short Pulse Radar Type 1, then each additional waveform is generated with Test B and must also be unique and not repeated from the previous waveforms in Tests A or B.

Pulse Repetition Intervals Values for Test A

Pulse Repetition Frequency Number	Pulse Repetition Frequency (Pulses Per Second)	Pulse Repetition Interval (Microseconds)
1	1930.5	518
2	1858.7	538
3	1792.1	558
4	1730.1	578
5	1672.2	598
6	1618.1	618
7	1567.4	638
8	1519.8	658
9	1474.9	678
10	1432.7	698
11	1392.8	718
12	1355	738
13	1319.3	758
14	1285.3	778
15	1253.1	798
16	1222.5	818
17	1193.3	838
18	1165.6	858
19	1139	878
20	1113.6	898
21	1089.3	918
22	1066.1	938
23	326.2	3066

2.3.2 Long Pulse Radar Test Waveform

Radar Type	Pulse Width (μsec)	Chirp Width (MHz)	PRI (μsec)	Number of Pulses per Burst	Number of Bursts	Minimum Percentage of Successful Detection	Minimum Number of Trials
5	50-100	5-20	1000-2000	1-3	8-20	80%	30

The parameters for this waveform are randomly chosen. Thirty unique waveforms are required for the Long Pulse Radar Type waveforms. If more than 30 waveforms are used for the Long Pulse Radar Type waveforms, then each additional waveform must also be unique and not repeated from the previous waveforms.

Each waveform is defined as follows:
1) The transmission period for the Long Pulse Radar test signal is 12 seconds.
2) There are a total of 8 to 20 Bursts in the 12 second period, with the number of Bursts being randomly chosen. This number is Burst Count.
3) Each Burst consists of 1 to 3 pulses, with the number of pulses being randomly chosen. Each Burst within the 12 second sequence may have a different number of pulses.
4) The pulse width is between 50 and 100 microseconds, with the pulse width being randomly chosen. Each pulse within a Burst will have the same pulse width. Pulses in different Bursts may have different pulse widths.
5) Each pulse has a linear frequency modulated chirp between 5 and 20 MHz, with the chirp width being randomly chosen. Each pulse within a transmission period will have the same chirp width. The chirp is centered on the pulse. For example, with a radar frequency of 5300 MHz and a 20 MHz chirped signal, the chirp starts at 5290 MHz and ends at 5310 MHz.
6) If more than one pulse is present in a Burst, the time between the pulses will be between 1000 and 2000 microseconds, with the time being randomly chosen. If three pulses are present in a Burst, the random time interval between the first and second pulses is chosen independently of the random time interval between the second and third pulses.
7) The 12 second transmission period is divided into even intervals. The number of intervals is equal to Burst Count. Each interval is of length (12,000,000 / Burst Count) microseconds. Each interval contains one Burst. The start time for the Burst, relative to the beginning of the interval, is between 1 and [(12,000,000 / Burst Count) – (Total Burst Length) + (One Random PRI Interval)] microseconds, with the start time being randomly chosen. The step interval for the start time is 1 microsecond. The start time for each Burst is chosen randomly.

A representative example of a Long Pulse Radar Type waveform:
1) The total test waveform length is 12 seconds.
2) Eight (8) Bursts are randomly generated for the Burst Count.
3) Burst 1 has 2 randomly generated pulses.
4) The pulse width (for both pulses) is randomly selected to be 75 microseconds.
5) The PRI is randomly selected to be at 1213 microseconds.
6) Bursts 2 through 8 are generated using steps 3 – 5.
7) Each Burst is contained in even intervals of 1,500,000 microseconds. The starting location for Pulse 1, Burst 1 is randomly generated (1 to 1,500,000 minus the total Burst 1 length + 1 random PRI interval) at the 325,001 microsecond step. Bursts 2 through 8 randomly fall in successive 1,500,000 microsecond intervals (i.e. Burst 2 falls in the 1,500,001 – 3,000,000 microsecond range).

Graphical representation of the Long Pulse Radar Test Waveform.

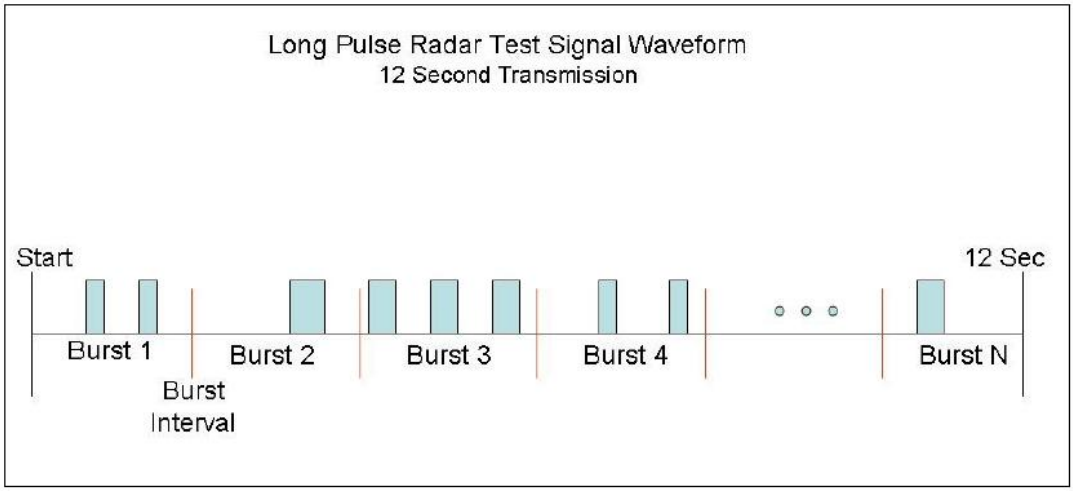

2.3.3 Frequency Hopping Radar Test Waveform

Radar Type	Pulse Width (μsec)	PRI (μsec)	Pulses per Hop	Hopping Rate (kHz)	Hopping Sequence Length (msec)	Minimum Percentage of Successful Detection	Minimum Number of Trials
6	1	333	9	0.333	300	70%	30

For the Frequency Hopping Radar Type, the same *Burst* parameters are used for each waveform. The hopping sequence is different for each waveform and a 100-length segment is selected from the hopping sequence defined by the following algorithm:
The first frequency in a hopping sequence is selected randomly from the group of 475 integer frequencies from 5250 – 5724 MHz. Next, the frequency that was just chosen is removed from the group and a frequency is randomly selected from the remaining 474 frequencies in the group. This process continues until all 475 frequencies are chosen for the set. For selection of a random frequency, the frequencies remaining within the group are always treated as equally likely

Radar Waveform Calibration

The following equipment setup was used to calibrate the conducted radar waveform. A spectrum analyzer was used to establish the test signal level for each radar type. During this process there were replace 50ohm terminal from master and client device and no transmissions by either the master or client device. The spectrum analyzer was switched to the zero span (time domain) at the frequency of the radar waveform generator. Peak detection was utilized. The spectrum analyzer resolution bandwidth (RBW) and video bandwidth (VBW) were set to 3MHz and 3 MHz.
The signal generator amplitude was set so that the power level measured at the spectrum analyzer was -61dBm due to the interference threshold level is not required

2.3.4 DFS test setup

Setup for Master with injection at the Master

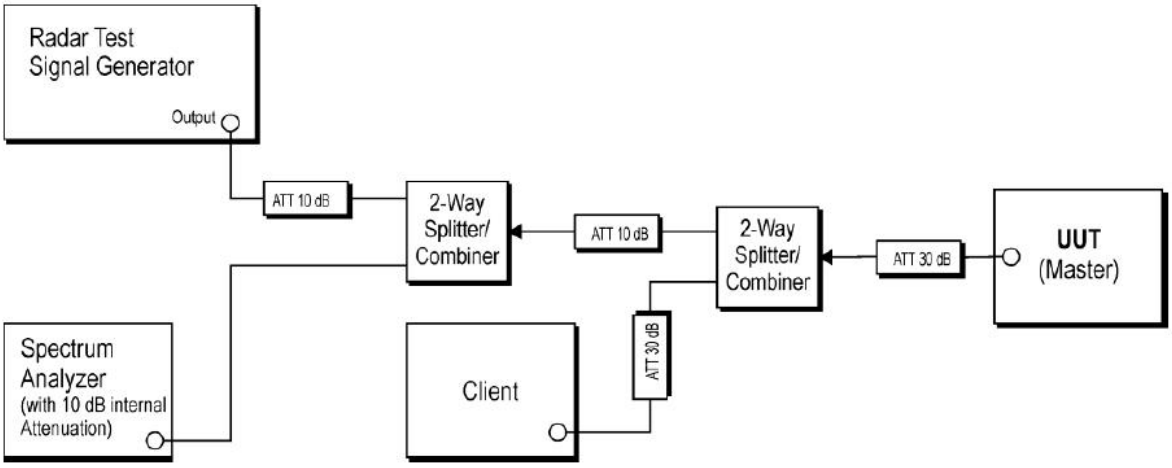

Setup for Client with injection at the Master

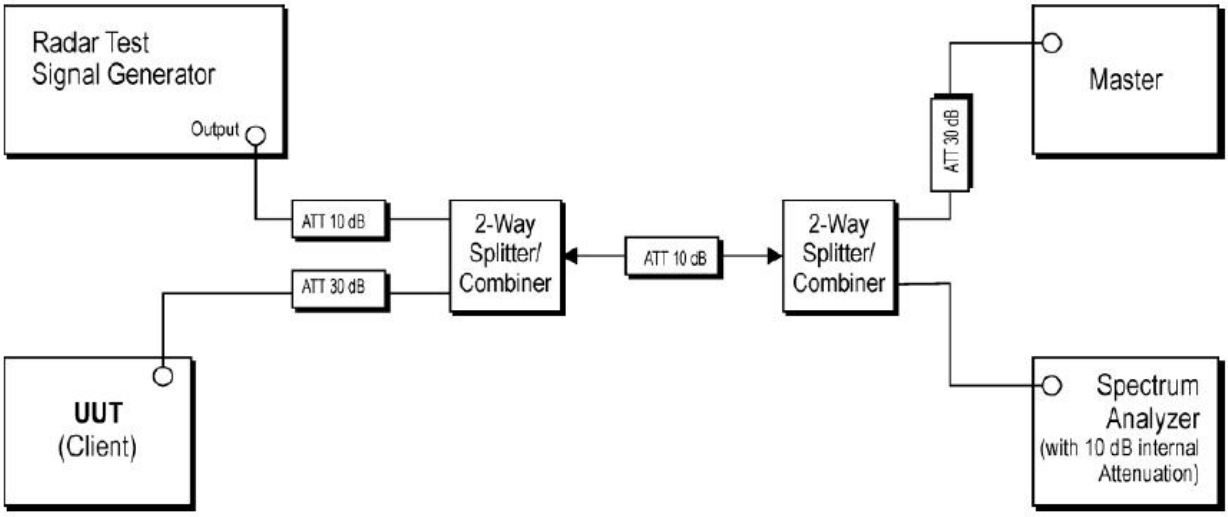

Setup for Client with injection at the Client

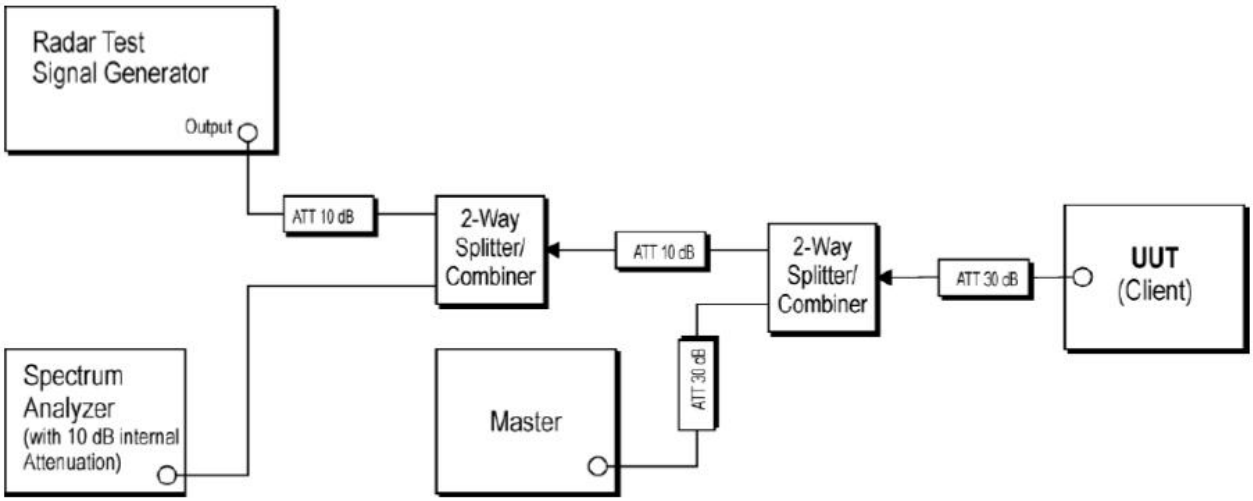

2.3.5 Channel Loading/Data Streaming

Timing plots are required with calculations demonstrating a minimum channel loading of approximately 17% or greater.

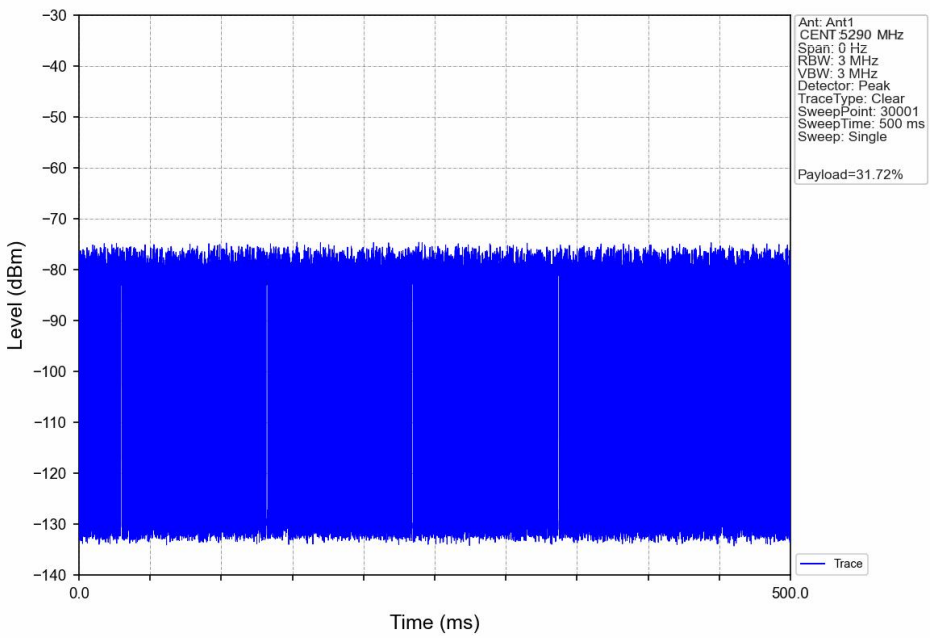

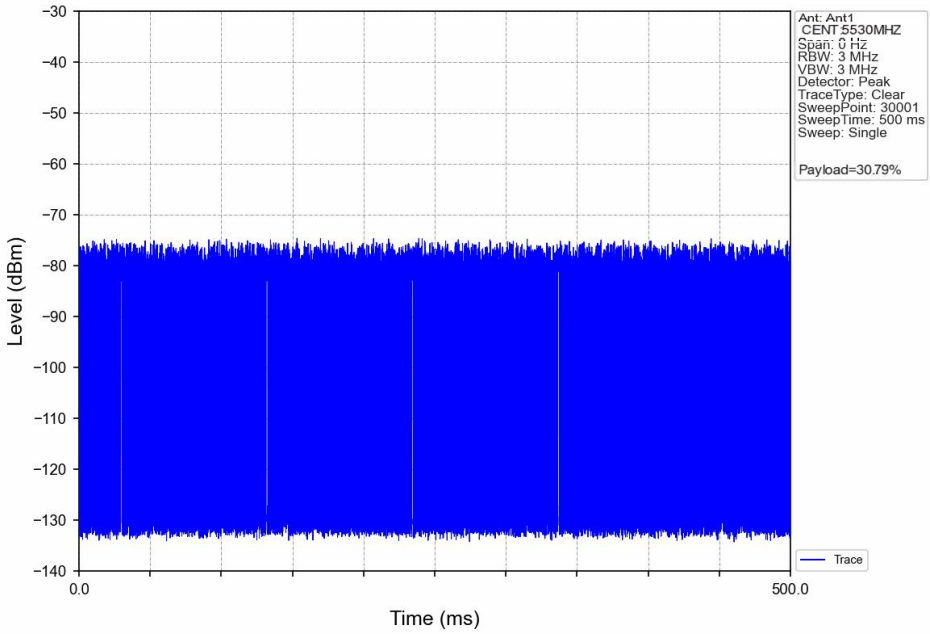

2.3.6 DFS Detection Threshold levels

Test result:

DFS Threshold level: -60.91 dBm.

Calibration plots for each of the required radar waveforms

Radar type0

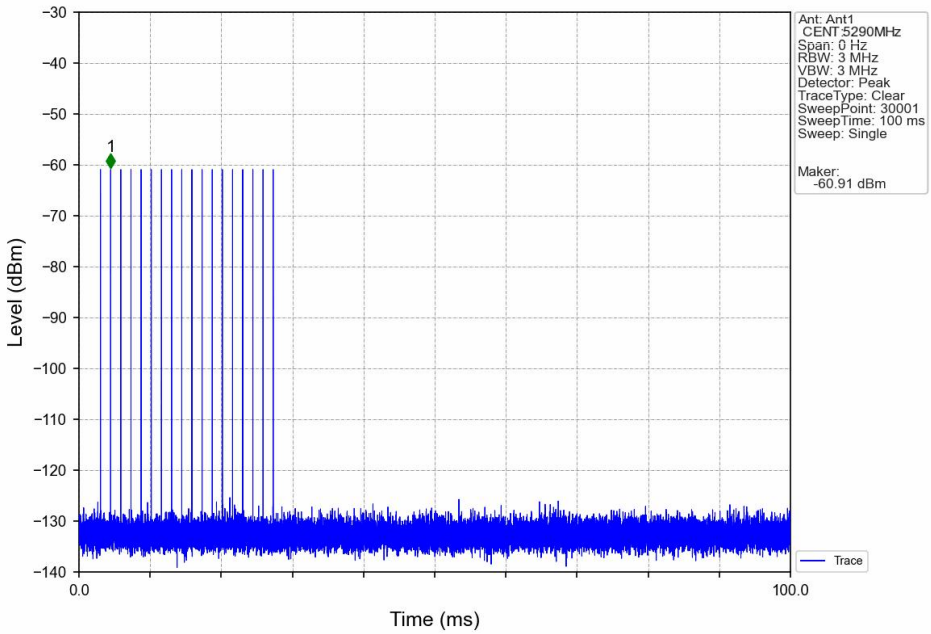

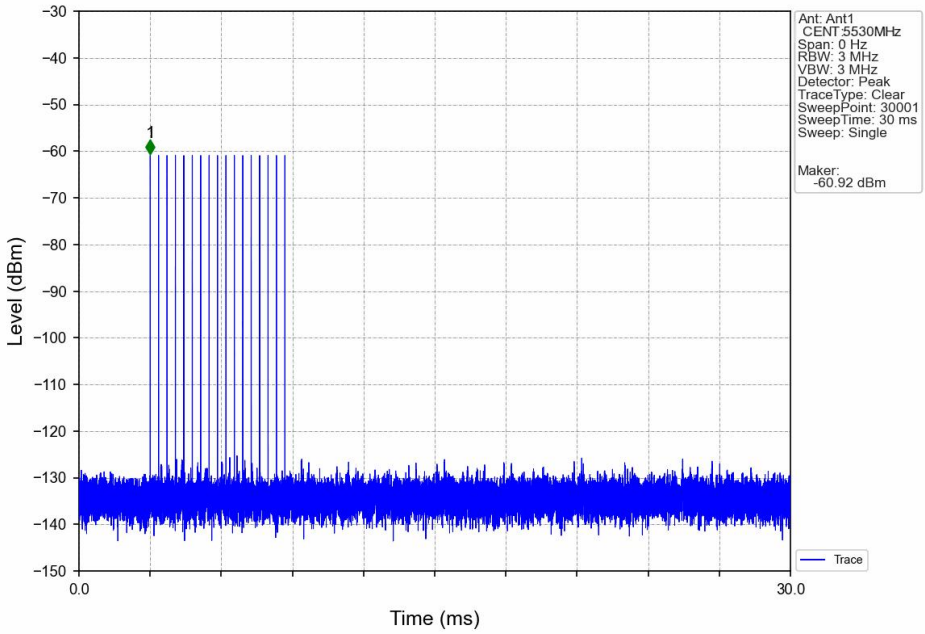

The worst values were recorded only

3. Conducted test procedure

3.1.Test Result

1) One frequency will be chosen from the Operating Channels of the UUT within the 5250-5350 MHz or 5470-5725MHz bands.
2) The Client Device (EUT) is set up the above diagram and communications between the Master device and the Client is established.
3) Stream the channel loading test file from the Master Device to the Client Device on the test Channel for the entire period of the test.
4) An additional 1 dB is added to the radar test signal to ensure it is at or above the DFS Detection Threshold, accounting for equipment variations/errors.
5) Observe the transmissions of the UUT at the end of the Burst on the Operating Channel for duration greater than 12 seconds for Radar Type 0 to ensure detection occurs.
6) After the initial radar burst the channel is monitored for 30 minutes to ensure no transmissions or beacons occur. A second monitoring setup is used to verify that the Master and Client have both moved to different channels.

Test Results:
Remark: We test all channels that need to be tested for DFS, including parts of the 5150-5250MHz and 5725-5850MHz that fall in the DFS band, reporting only part of the test pattern and data. In this report, we have identified other parts that are compliant with FCC regulations .

Mode	Channel number	Center frequency	Channel Move Time (s)	Limits(s)	Channel Closing Transmission Time(s)	Limits(s)	Results
802.11ac(HT80)	58	5290	0.26	10	0	200 milliseconds + an aggregate of 60 milliseconds over remaining 10 second period	Pass
802.11ac(HT80)	106	5530	0.26		0		Pass

Note:
1. The aggregate duration of all transmissions of the RLAN device on this channel during the Channel Move Time shall be limited to the Channel Closing Transmission Time. The aggregate duration of all transmissions shall not include quiet periods in between transmissions.
2. A reference type radar waveform was introduced to the EUT when 1s after sweep, and the spectrum Analyzer sweep time was set to 12s for monitoring and capturing the plot. A software program was created to collect the trace data and capturing the plot, then automatic calculate the duration time.

Test plot:

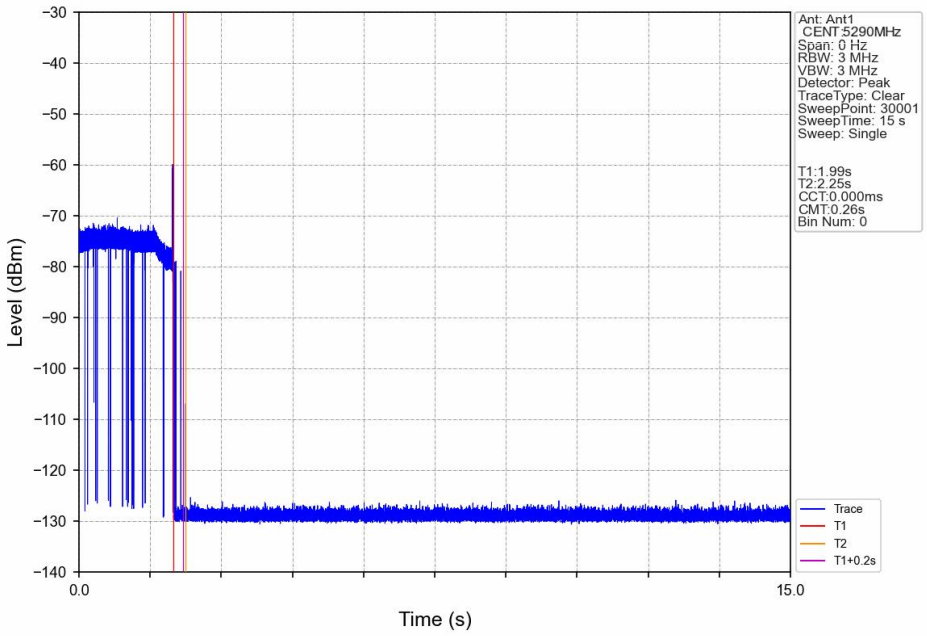

802.11ac(HT80) channel 58 5290MHz

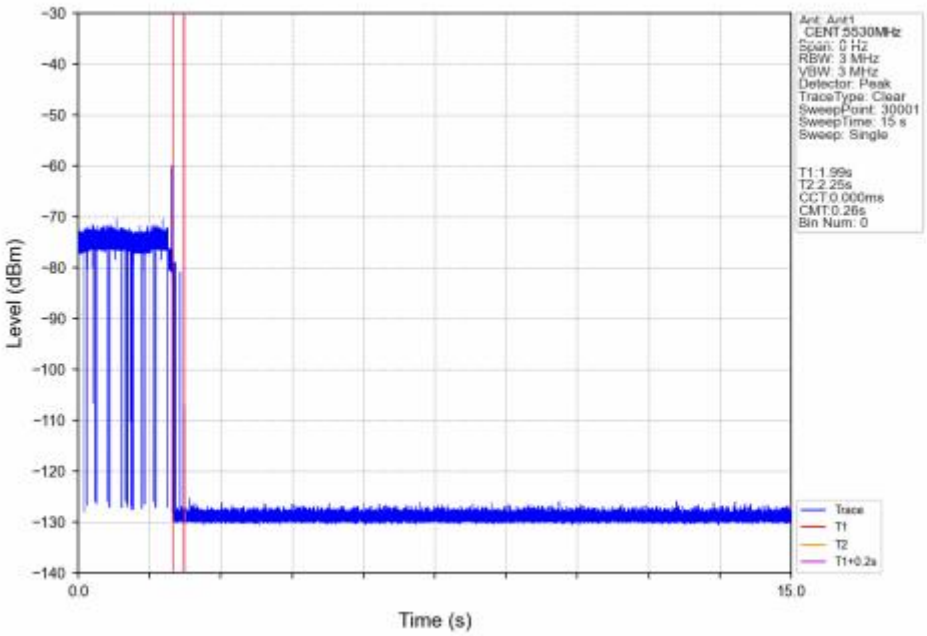

802.11ac(HT80) channel 106 5530MHz

Non-occupancy Period Period(without radar detection)

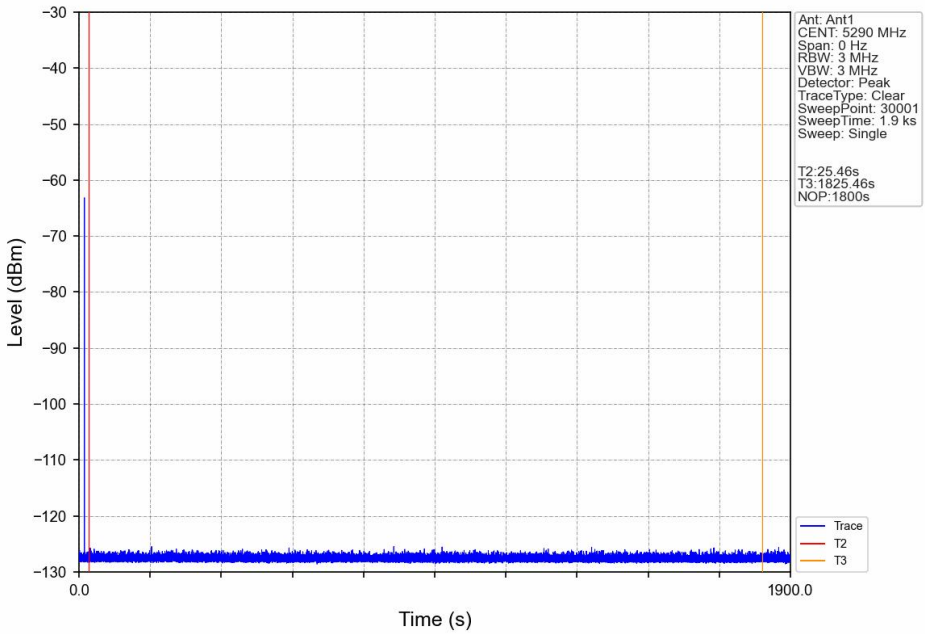

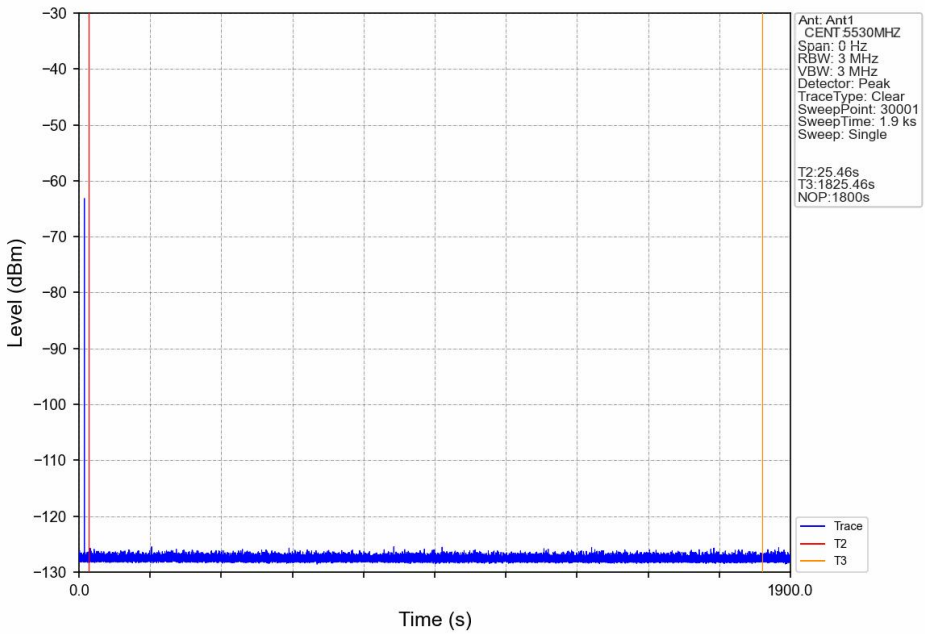

Test Item	Modulation Mode	Freq. (GHz)	Limit	Results
Channel Move Time	AC80	5.3	10s	Pass
Channel Move Time	AC80	5.58	10s	Pass
Non-Occupancy Period	AC80	5.3	30 minutes	Pass
Non-Occupancy Period	AC80	5.58	30 minutes	Pass

4. Test Photographs

Please see the attachment for Test Photographs

Appendix I: Photos of the EUT

Please see the attachment for External Photographs and Internal Photographs