Shenzhen CTL Testing Technology Co., Ltd.
Tel: +86-755-89486194 E-mail: ctl@ctl-lab.com

TEST REPORT

FCC Part 27

Report Reference No.....: **CTL2005117011-WF04**

Compiled by: (position+printed name+signature)	Happy Guo (File administrators)	Happy Guo
Tested by: (position+printed name+signature)	Nice Nong (Test Engineer)	Nice Nong
Approved by: (position+printed name+signature)	Ivan Xie (Manager)	Ivan Xie

Product Name.....: CareWatch Voice
Model/Type reference.....: T01
List Model(s).....: N/A
Trade Mark.....: OneCare
FCC ID.....: 2AWPJ-T01

Applicant's name.....: **OneCare, Inc.**
Address of applicant.....: 114 State Road 46 E Batesville,Indiana 47006

Test Firm.....: **Shenzhen CTL Testing Technology Co., Ltd.**
Address of Test Firm.....: Floor 1-A, Baisha Technology Park, No.3011, Shahexi Road, Nanshan District, Shenzhen, China 518055

Test specification.....:
Standard.....: **FCC CFR Title 47 Part 2, Part 27**
ANSI/TIA/EIA-603-E:2016
KDB 971168 D01
TRF Originator.....: Shenzhen CTL Testing Technology Co., Ltd.
Master TRF.....: Dated 2011-01

Date of receipt of test item.....: May 20, 2020
Date of sampling.....: May 22, 2020
Date of Test Date.....: May 29, 2020-Jun. 28, 2020
Data of Issue.....: Jun. 29, 2020
Result.....: **Pass**

Shenzhen CTL Testing Technology Co., Ltd. All rights reserved.
This publication may be reproduced in whole or in part for non-commercial purposes as long as the Shenzhen CTL Testing Technology Co., Ltd. is acknowledged as copyright owner and source of the material. Shenzhen CTL Testing Technology Co., Ltd. takes no responsibility for and will not assume liability for damages resulting from the reader's interpretation of the reproduced material due to its placement and context.

TEST REPORT

Test Report No. :	CTL2005117011-WF04	Jun. 29, 2020 Date of issue

Equipment under Test	:	CareWatch Voice
Model /Type	:	T01
Listed Models	:	N/A
Applicant	:	**OneCare, Inc.**
Address	:	114 State Road 46 E Batesville,Indiana 47006
Manufacturer	:	**Shenzhen Yinuo Technologies., Ltd.**
Address	:	Rm A611, Building AD, Gao Xin Qi Science Industry Park2 Liu Xian Yi Lu Bao An District, Shenzhen, Guangdong, China

Test result	Pass *

*In the configuration tested, the EUT complied with the standards specified page 5.

The test report merely corresponds to the test sample.
It is not permitted to copy extracts of these test result without the written permission of the test laboratory.

** Modified History **

Revisions	Description	Issued Data	Report No.	Remark
Version 1.0	Initial Test Report Release	2020-06-29	CTL2005117011-WF04	Tracy Qi

Table of Contents Page

1. SUMMARY **5**

1.1. TEST STANDARDS 5
1.2. TEST DESCRIPTION 5
1.3. TEST FACILITY 6
1.4. STATEMENT OF THE MEASUREMENT UNCERTAINTY 6

2. GENERAL INFORMATION **8**

2.1. ENVIRONMENTAL CONDITIONS 8
2.2. GENERAL DESCRIPTION OF EUT 8
2.3. DESCRIPTION OF TEST MODES 8
2.4. EQUIPMENTS USED DURING THE TEST 10
2.5. RELATED SUBMITTAL(S) / GRANT (S) 11
2.6. MODIFICATIONS 11

3. TEST CONDITIONS AND RESULTS **12**

3.1. OUTPUT POWER 12
3.2. PEAK-TO-AVERAGE RATIO (PAR) 13
3.3. OCCUPIED BANDWIDTH AND EMISSION BANDWIDTH 14
3.4. BAND EDGE COMPLIANCE 15
3.5. SPURIOUS EMISSION 16
3.6. FREQUENCY STABILITY UNDER TEMPERATURE & VOLTAGE VARIATIONS 19

4. TEST SETUP PHOTOS OF THE EUT **21**

5. PHOTOS OF THE EUT **22**

1. SUMMARY

1.1. TEST STANDARDS

The tests were performed according to following standards:

FCC Part 27 : MISCELLANEOUS WIRELESS COMMUNICATIONS SERVICES

ANSI/TIA/EIA-603-E March 2016:Land Mobile FM or PM Communications Equipment Measurement and Performance Standards.

FCC Part 2: FREQUENCY ALLOCA-TIONS AND RADIO TREATY MAT-TERS; GENERAL RULES AND REG-ULATIONS

KDB971168 D01: v02r02 MEASUREMENT GUIDANCE FOR CERTIFICATION OF LICENSED DIGITAL TRANSMITTERS

ANSI C63.10: 2013: American National Standard for Testing Unlicensed Wireless Devices

ANSI C63.4: 2014: –American National Standard for Methods of Measurement of Radio-Noise Emissions from Low-Voltage Electrical and Electronic Equipment in the Range of 9 kHz to 40GHz

Range of 9 kHz to 40GHz

1.2. Test Description

Test Item	Section in CFR 47	Result
RF Output Power	§2.1046, §27.50(d)	Pass
Peak-to-Average Ratio	§2.1046, §27.50(d)	Pass
99% & -26 dB Occupied Bandwidth	§2.1049	Pass
Spurious Emissions at Antenna Terminal	§2.1051, §27.53(h)	Pass
Field Strength of Spurious Radiation	§2.1055, §27.54	Pass
Out of band emission, Band Edge	§2.1051, §27.53(h)	Pass
Frequency stability	§2.1053, §27.53(h)	Pass

1.3. Test Facility

1.3.1 Address of the test laboratory

Shenzhen CTL Testing Technology Co., Ltd.
Floor 1-A, Baisha Technology Park, No. 3011, Shahexi Road, Nanshan, Shenzhen 518055 China

There is one 3m semi-anechoic chamber and two line conducted labs for final test. The Test Sites meet the requirements in documents ANSI C63.4 and CISPR 22/EN 55022 requirements.

1.3.2 Laboratory accreditation

The test facility is recognized, certified, or accredited by the following organizations:

CNAS-Lab Code: L7497

Shenzhen CTL Testing Technology Co., Ltd. has been assessed and proved to be in compliance with CNAS-CL01 Accreditation Criteria for Testing and Calibration Laboratories (identical to ISO/IEC 17025: 2005 General Requirements) for the Competence of Testing and Calibration Laboratories.

A2LA-Lab Cert. No. 4343.01

Shenzhen CTL Testing Technology Co., Ltd, EMC Laboratory has been accredited by A2LA for technical competence in the field of electrical testing, and proved to be in compliance with ISO/IEC 17025: 2005 General Requirements for the Competence of Testing and Calibration Laboratories and any additional program requirements in the identified field of testing.

IC Registration No.: 9618B

CAB identifier: CN0041

The 3m alternate test site of Shenzhen CTL Testing Technology Co., Ltd. EMC Laboratory has been registered by Innovation, Science and Economic Development Canada to test to Canadian radio equipment requirements with Registration No.: 9618B on Jan. 22, 2019.

FCC-Registration No.: 399832

Designation No.: CN1216

Shenzhen CTL Testing Technology Co., Ltd. EMC Laboratory has been registered and fully described in a report filed with the (FCC) Federal Communications Commission. The acceptance letter from the FCC is maintained in our files. Registration 399832, December 08, 2017.

1.4. Statement of the measurement uncertainty

The data and results referenced in this document are true and accurate. The reader is cautioned that there may be errors within the calibration limits of the equipment and facilities. The measurement uncertainty was calculated for all measurements listed in this test report acc. to CISPR 16 - 4 “Specification for radio disturbance and immunity measuring apparatus and methods – Part 4: Uncertainty in EMC Measurements“ and is documented in the Shenzhen CTL Testing Technology Co., Ltd. quality system acc. to DIN EN ISO/IEC 17025. Furthermore, component and process variability of devices similar to that tested may result in additional deviation. The manufacturer has the sole responsibility of continued compliance of the device.

Hereafter the best measurement capability for CTL laboratory is reported:

Test	Measurement Uncertainty	Notes
Transmitter power conducted	±0.57 dB	(1)
Transmitter power Radiated	±2.20 dB	(1)
Conducted spurious emission 9KHz-40 GHz	±2.20 dB	(1)
Occupied Bandwidth	±0.01ppm	(1)
Radiated Emission 30~1000MHz	±4.10dB	(1)
Radiated Emission Above 1GHz	±4.32dB	(1)

Conducted Disturbance0.15~30MHz	±3.20dB	(1)

(1) This uncertainty represents an expanded uncertainty expressed at approximately the 95% confidence level using a coverage factor of k=2.

2. GENERAL INFORMATION

2.1. Environmental conditions

During the measurement the environmental conditions were within the listed ranges:

Normal Temperature:	25°C
Relative Humidity:	55 %
Air Pressure:	101 kPa

2.2. General Description of EUT

Product Name:	CareWatch Voice
Model/Type reference:	T01
Power supply:	DC 3.8V from battery
Hardware version:	T01_MB_V1.2
Software version:	T01-V2.6.01
LTE	
Operation Band:	FDD-LTE: Band 4/13
Modulation Type:	QPSK, 16QAM
Release Version:	Release 9
Category:	Cat 1
Antenna Type:	LDS antenna
Antenna Gain:	-6.82 dBi

Channel Bandwidth	Frequency range	Max. ERP power	Emission Designator
5MHz	779.5~784.5MHz	40.93mW	4M57G7D
10MHz	782.0MHz	25.88mW	9M03G7D

Note1: For more details, please refer to the user's manual of the EUT.
Note2: Antenna gain provided by the applicant.
Note3: This report only reports band 13.

2.3. Description of Test Modes

The EUT has been tested under typical operating condition. The CMW500 used to control the EUT staying in continuous transmitting and receiving mode for testing. Regards to the frequency band operation: the lowest、middle and highest frequency of channel were selected to perform the test, then shown on this report.

Band	Radiated Emission
LTE Band 13	Z-plane

Test Item	Available channel	Test channel	Channel Bandwidth	Modulation	Mode
Peak-to-Average Ratio	779.5~784.5MHz	23205(779.5MHz), 23230(782.0MHz), 23255(784.5MHz)	5MHz	QPSK, 16QAM	25 RB/0 RB Offset
	782.0MHz	23230(782.0MHz),	10MHz	QPSK	50 RB/0 RB Offset
				16QAM	12 RB/0 RB Offset

Occupied Bandwidth	779.5~784.5MHz	23205(779.5MHz), 23230(782.0MHz), 23255(784.5MHz)	5MHz	QPSK, 16QAM	25 RB/0 RB Offset
	782.0MHz	23230(782.0MHz),	10MHz	QPSK	50 RB/0 RB Offset
				16QAM	12 RB/0 RB Offset
Conducted Emission	779.5~784.5MHz	23205(779.5MHz), 23230(782.0MHz), 23255(784.5MHz)	5MHz	QPSK, 16QAM	25 RB/0 RB Offset
	782.0MHz	23230(782.0MHz),	10MHz	QPSK	50 RB/0 RB Offset
				16QAM	12 RB/0 RB Offset
Radiated Emission	779.5~784.5MHz	23205(779.5MHz), 23230(782.0MHz), 23255(784.5MHz)	5MHz	QPSK	25 RB/0 RB Offset
	782.0MHz	23230(782.0MHz),	10MHz	QPSK	50 RB/0 RB Offset
Band Edge compliance	779.5~784.5MHz	23205(779.5MHz), 23255(784.5MHz)	5MHz	QPSK, 16QAM	25 RB/0 RB Offset
Frequency stability	779.5~784.5MHz	23205(779.5MHz), 23230(782.0MHz), 23255(784.5MHz)	5MHz	QPSK, 16QAM	25 RB/0 RB Offset
	782.0MHz	23230(782.0MHz),	10MHz	QPSK	50 RB/0 RB Offset
				16QAM	12 RB/0 RB Offset

2.4. Equipments Used during the Test

Test Equipment	Manufacturer	Model No.	Serial No.	Calibration Date	Calibration Due Date
LISN	R&S	ESH2-Z5	860014/010	2020/05/21	2021/05/20
Double cone logarithmic antenna	Schwarzbeck	VULB 9168	824	2020/05/23	2021/05/22
Horn Antenna	Ocean Microwave	OBH100400	26999002	2019/11/28	2020/11/27
EMI Test Receiver	R&S	ESCI	1166.5950.03	2020/05/21	2021/05/20
Spectrum Analyzer	Agilent	E4407B	MY41440676	2020/05/20	2021/05/19
Spectrum Analyzer	Agilent	N9020A	US46220290	2020/05/20	2021/05/19
Spectrum Analyzer	Keysight	N9020A	MY53420874	2020/05/20	2021/05/19
Controller	EM Electronics	EM 1000	060859	2020/05/21	2021/05/20
Horn Antenna	Sunol Sciences Corp.	DRH-118	A062013	2020/05/23	2021/05/22
Active Loop Antenna	Da Ze	ZN30900A	/	2020/05/23	2021/05/22
Amplifier	Agilent	8449B	3008A02306	2020/05/21	2021/05/20
Amplifier	Agilent	8447D	2944A10176	2020/05/21	2021/05/20
Amplifier	Brief&Smart	LNA-4018	2104197	2020/05/20	2021/05/19
Temperature/Humidity Meter	Gangxing	CTH-608	02	2020/05/22	2021/05/21
Power Sensor	Agilent	U2021XA	MY55130004	2020/05/20	2021/05/19
Power Sensor	Agilent	U2021XA	MY55130006	2020/05/20	2021/05/19
Power Sensor	Agilent	U2021XA	MY54510008	2020/05/20	2021/05/19
Power Sensor	Agilent	U2021XA	MY55060003	2020/05/20	2021/05/19
Spectrum Analyzer	RS	FSP	1164.4391.38	2020/05/20	2021/05/19
Wideband Radio Communication Tester	R&S	CMW500	101814	2020/05/20	2021/05/19

Test Software

Name of Software	Version
TST-PASS	1.05
ES-K1(Below 1GHz)	V1.71
e3(Above 1GHz)	6.111221a

The calibration interval was one year

2.5. Related Submittal(s) / Grant (s)

This submittal(s) (test report) is intended to comply with of the Part 27.

2.6. Modifications

No modifications were implemented to meet testing criteria.

3. TEST CONDITIONS AND RESULTS

3.1. Output Power

LIMIT

FCC: 3 Watts ERP
IC: 50 Watts e.i.r.p

TEST CONFIGURATION

Conducted Power Measurement

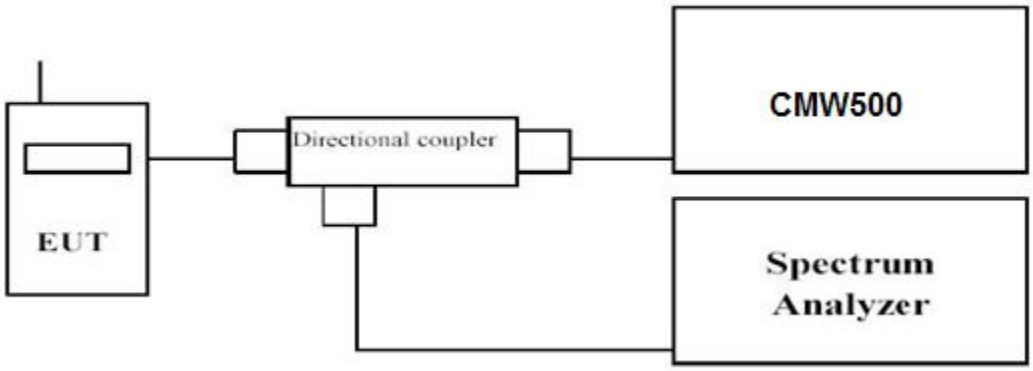

TEST RESULTS

Raw data reference to Appendix section 1.

3.2. Peak-to-Average Ratio (PAR)

LIMIT

The Peak-to-Average Ratio (PAR) of the transmission may not exceed 13 dB.

TEST CONFIGURATION

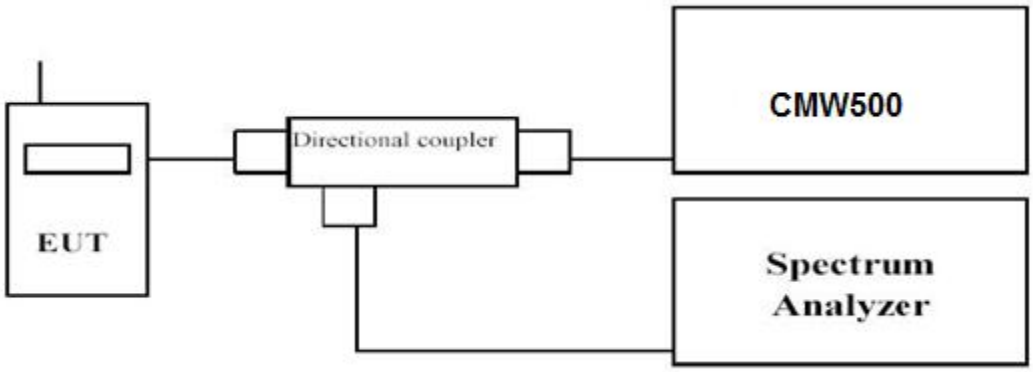

TEST PROCEDURE

1. Refer to instrument's analyzer instruction manual for details on how to use the power statistics/CCDF function;
2. Set resolution/measurement bandwidth ≥ signal's occupied bandwidth;
3. Set the number of counts to a value that stabilizes the measured CCDF curve;
4. Set the measurement interval as follows:
   1). for continuous transmissions, set to 1 ms,
   2). for burst transmissions, employ an external trigger that is synchronized with the EUT burst timing sequence, or use the internal burst trigger with a trigger level that allows the burst to stabilize and set the measurement interval to a time that is less than or equal to the burst duration.
5. Record the maximum PAPR level associated with a probability of 0.1%.

TEST RESULTS

Raw data reference to Appendix section 4.

3.3. Occupied Bandwidth and Emission Bandwidth

LIMIT

N/A

TEST CONFIGURATION

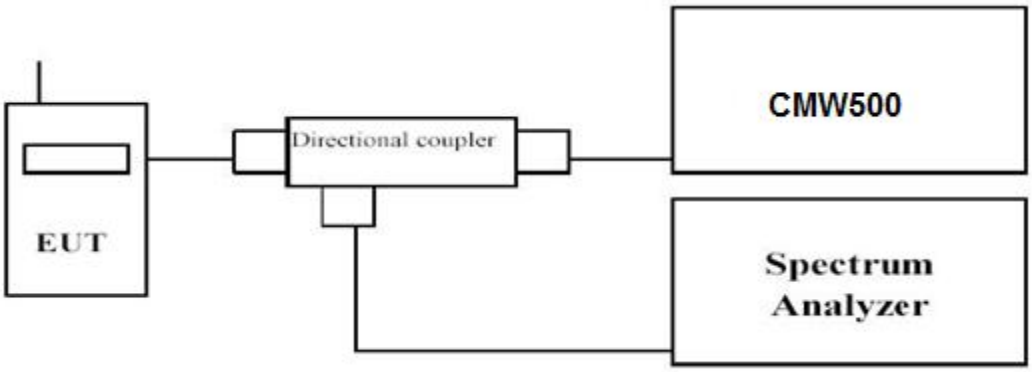

TEST PROCEDURE

The transmitter output was connected to a calibrated coaxial cable and coupler, the other end of which was connected to a spectrum analyzer. The occupied bandwidth was measured with the spectrum analyzer at low, middle and high channel in each band. The -26dBc Emission bandwidth was also measured and recorded.
Set RBW was set to about 1% of emission BW, VBW≥3 times RBW.
-26dBc display line was placed on the screen (or 99% bandwidth), the occupied bandwidth is the delta frequency between the two points where the display line intersects the signal trace.

TEST RESULTS

Raw data reference to Appendix section 3.

3.4. Band Edge compliance

LIMIT

The power of any emission outside a licensee's frequency band(s) of operation shall be attenuated below the transmitter power (P) within the licensed band(s) of operation, measured in watts, by at least 43 + 10 log (P) dB

TEST CONFIGURATION

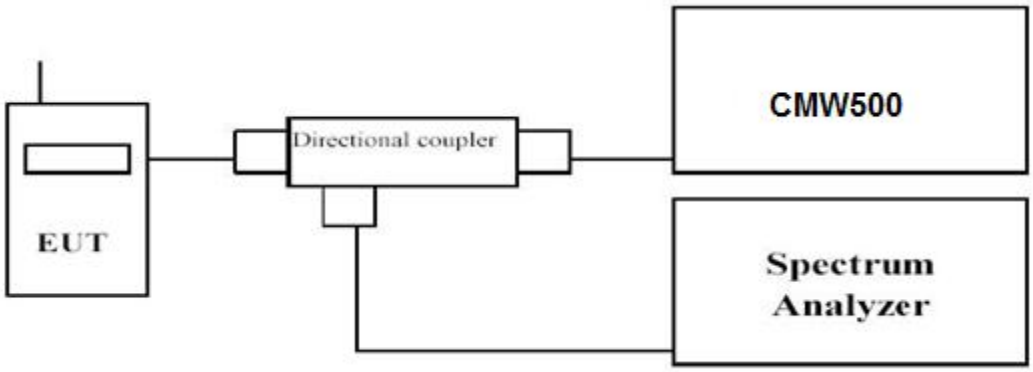

TEST PROCEDURE

1. The transmitter output port was connected to base station.
2. The RF output of EUT was connected to the power meter by RF cable and attenuator, the path loss was compensated to the results for each measurement.
3. Set EUT at maximum power through base station.
4. Select lowest and highest channels for each band and different modulation.
5. Measure Band edge using RMS (Average) detector by spectrum

TEST RESULTS

Raw data reference to Appendix section 5.

3.5. Spurious Emission

LIMIT

The power of any emission outside a licensee's frequency band(s) of operation shall be attenuated below the transmitter power (P) within the licensed band(s) of operation, measured in watts, by at least 43 + 10 log (P) dB

TEST CONFIGURATION

Conducted Spurious Measurement:

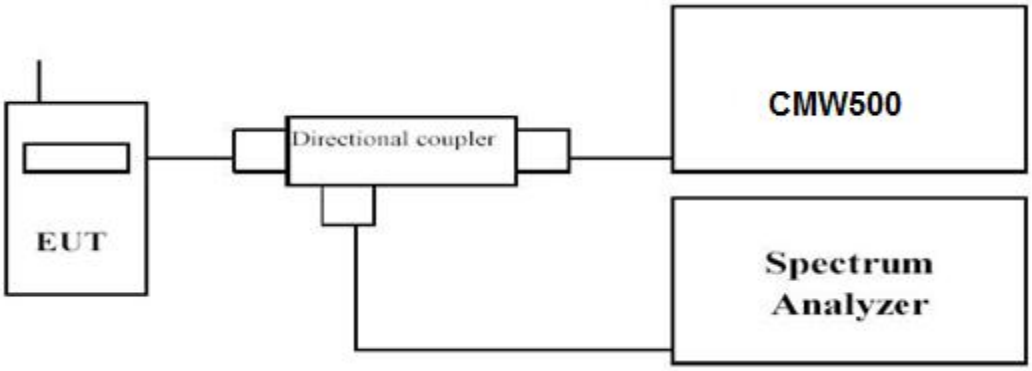

Radiated Spurious Measurement:

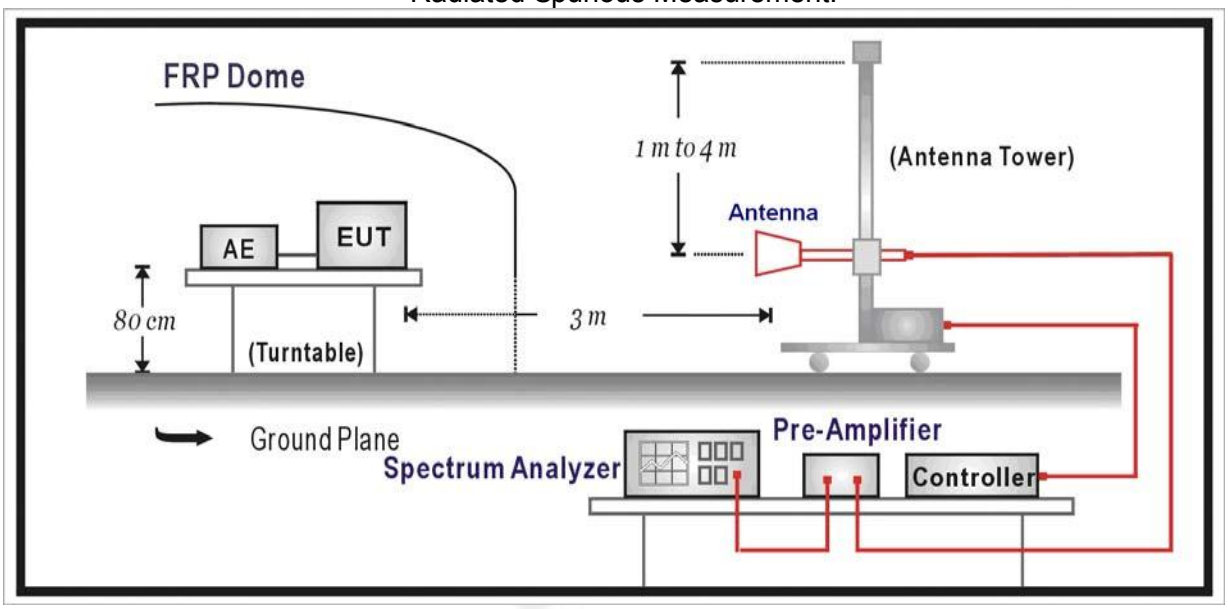

TEST CONFIGURATION

Conducted Spurious Measurement:

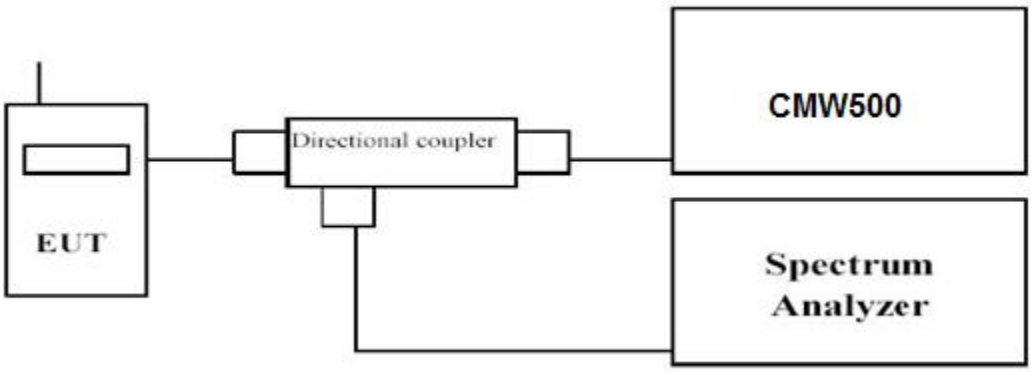

Radiated Spurious Measurement:

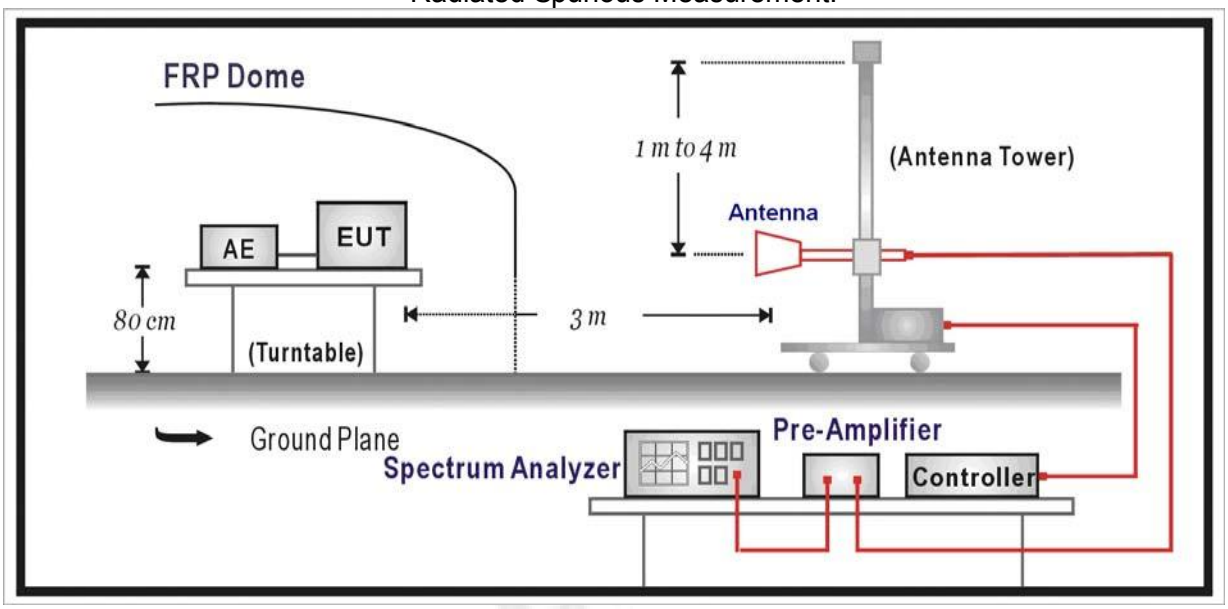

TEST PROCEDURE

The EUT was setup according to ANSI/TIA/EIA-603-E

Conducted Spurious Measurement:

a. Place the EUT on a bench and set it in transmitting mode.
b. Connect a low loss RF cable from the antenna port to a spectrum analyzer and CMW500 by a Directional Couple.
c. EUT Communicate with CMW500 then selects a channel for testing.
d. Add a correction factor to the display of spectrum, and then test.
e. The resolution bandwidth of the spectrum analyzer was set sufficient scans were taken to show the out of band Emission if any up to10th harmonic.

Radiated Spurious Measurement:

a. The EUT shall be placed at the specified height on a support, and in the position closest to normal use as declared by provider.
b. The test antenna shall be oriented initially for vertical polarization and shall be chosen to correspond to the frequency of the transmitter
c. The output of the test antenna shall be connected to the measuring receiver.
d. The transmitter shall be switched on and the measuring receiver shall be tuned to the frequency of the transmitter under test.
e. The test antenna shall be raised and lowered through the specified range of height until a maximum signal level is detected by the measuring receiver.
f. The transmitter shall then be rotated through 360° in the horizontal plane, until the maximum signal level is detected by the measuring receiver.
g. The test antenna shall be raised and lowered again through the specified range of height until a maximum signal level is detected by the measuring receiver.
h. The maximum signal level detected by the measuring receiver shall be noted.
i. The transmitter shall be replaced by a substitution antenna.
j. The substitution antenna shall be orientated for vertical polarization and the length of the substitution antenna shall be adjusted to correspond to the frequency of the transmitter.
k. The substitution antenna shall be connected to a calibrated signal generator.

l. If necessary, the input attenuator setting of the measuring receiver shall be adjusted in order to increase the sensitivity of the measuring receiver.
m. The test antenna shall be raised and lowered through the specified range of height to ensure that the maximum signal is received.
n. The input signal to the substitution antenna shall be adjusted to the level that produces a level detected by the measuring receiver, that is equal to the level noted while the transmitter radiated power was measured, corrected for the change of input attenuator setting of the measuring receiver.
o. The measurement shall be repeated with the test antenna and the substitution antenna orientated for horizontal polarization.
p. The measure of the effective radiated power is the larger of the two levels recorded at the input to the substitution antenna, corrected for gain of the substitution antenna if necessary.
q. The resolution bandwidth of the spectrum analyzer was set at 100 kHz for Part 22 and 1MHz for Part 24. The frequency range was checked up to 10th harmonic.
r. Test site anechoic chamber refer to ANSI C63.

TEST RESULTS

Raw data reference to Appendix section 5.

3.6. Frequency Stability under Temperature & Voltage Variations

LIMIT

The frequency stability shall be sufficient to ensure that the fundamental emissions stay within the authorized bands of operation.

TEST CONFIGURATION

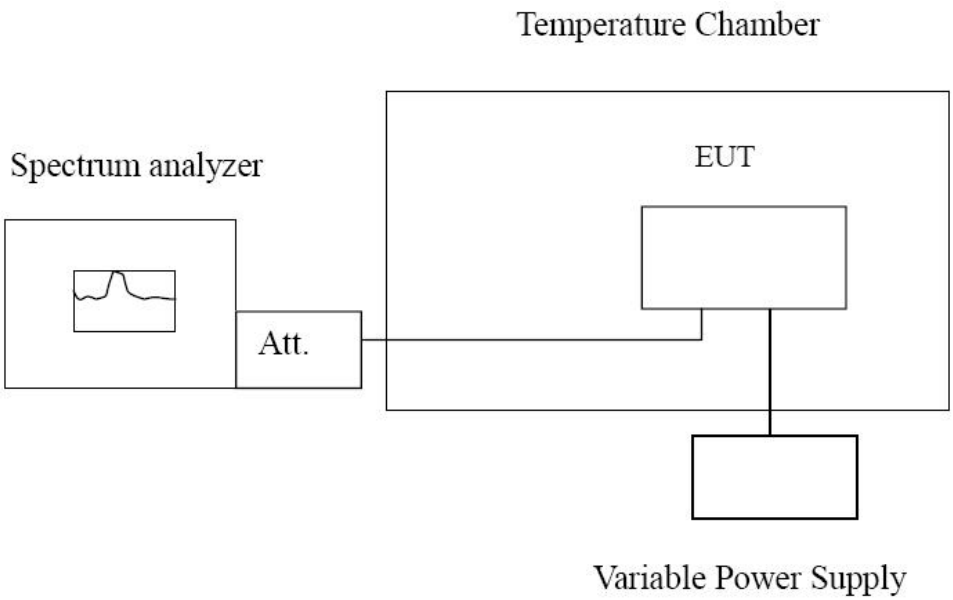

TEST PROCEDURE

The EUT was setup according to ANSI/TIA/EIA-603-E

Frequency Stability under Temperature Variations:
In order to measure the carrier frequency under the condition of AFC lock, it is necessary to make measurements with the EUT in a “call mode”. This is accomplished with the use of R&S CMW500 DIGITAL RADIO COMMUNICATION TESTER.

1. Measure the carrier frequency at room temperature.
2. Subject the EUT to overnight soak at -30℃.
3. With the EUT, powered via nominal voltage, connected to the CMW500 and in a simulated call on middle channel for LTE Band 17, measure the carrier frequency. These measurements should be made within 2 minutes of Powering up the EUT, to prevent significant self-warming.
4. Repeat the above measurements at 10℃ increments from -30℃ to +50℃. Allow at least 1.5 hours at each temperature, unpowered, before making measurements.
5. Re-measure carrier frequency at room temperature with nominal voltage. Vary supply voltage from minimum voltage to maximum voltage, in 0.1Volt increments re-measuring carrier frequency at each voltage. Pause at nominal voltage for 1.5 hours unpowered, to allow any self-heating to stabilize, before continuing.
6. Subject the EUT to overnight soak at +50℃.
7. With the EUT, powered via nominal voltage, connected to the CMW500 and in a simulated call on the centre channel, measure the carrier frequency. These measurements should be made within 2 minutes of Powering up the EUT, to prevent significant self-warming.
8. Repeat the above measurements at 10 ℃ increments from +50℃ to -30℃. Allow at least 1.5 hours at each temperature, unpowered, before making measurements
9. At all temperature levels hold the temperature to +/- 0.5℃ during the measurement procedure.

Frequency Stability under Voltage Variations:
Set chamber temperature to 20℃. Use a variable AC power supply / DC power source to power the EUT and set the voltage to rated voltage. Set the spectrum analyzer RBW low enough to obtain the desired frequency resolution and recorded the frequency.
Reduce the input voltage to specify extreme voltage variation (±15%) and endpoint, record the maximum frequency change.

TEST RESULTS

Raw data reference to Appendix section 2.

4. Test Setup Photos of the EUT

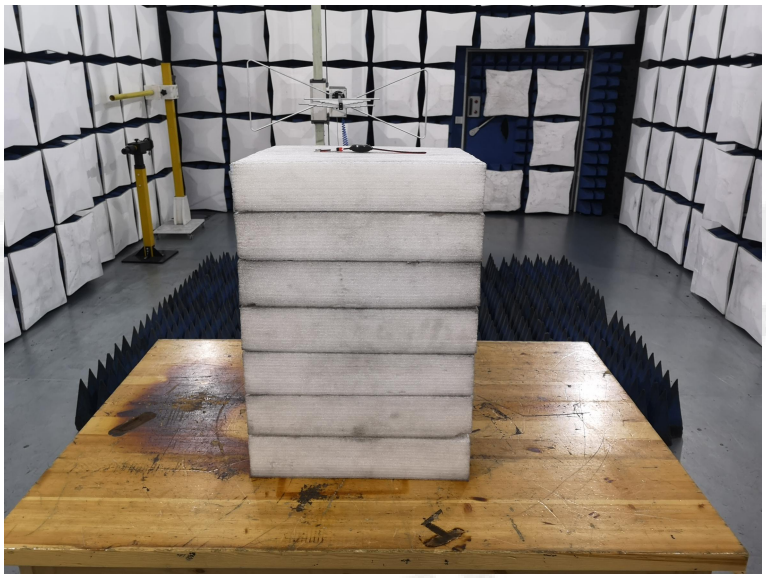

5. Photos of the EUT

Reference to the test report No. CTL2005117011-WF01

********** **End of Report** **********