Shenzhen CTL Testing Technology Co., Ltd.
Tel: +86-755-89486194 E-mail: ctl@ctl-lab.com

# TEST REPORT

**FCC Part 27**

**Report Reference No**.....: **CTL2005117011-WF03**

| | | |
|---|---|---|
| Compiled by:<br>( position+printed name+signature) | Happy Guo<br>(File administrators) | Happy Guo |
| Tested by:<br>( position+printed name+signature) | Nice Nong<br>(Test Engineer) | Nice Nong |
| Approved by:<br>( position+printed name+signature) | Ivan Xie<br>(Manager) | Ivan Xie |

**Product Name**..... : CareWatch Voice
**Model/Type reference**.....: T01
**List Model(s)**.....: N/A
**Trade Mark**..... : OneCare
**FCC ID**..... : 2AWPJ-T01

**Applicant's name**..... : **OneCare, Inc.**
**Address of applicant**.....: 114 State Road 46 E Batesville,Indiana 47006

**Test Firm**.....: **Shenzhen CTL Testing Technology Co., Ltd.**
**Address of Test Firm**.....: Floor 1-A, Baisha Technology Park, No.3011, Shahexi Road, Nanshan District, Shenzhen, China 518055

**Test specification**.....:
Standard.....: **FCC CFR Title 47 Part 2, Part 27**
**ANSI/TIA/EIA-603-E:2016**
**KDB 971168 D01**
TRF Originator.....: Shenzhen CTL Testing Technology Co., Ltd.
Master TRF..... : Dated 2011-01

**Date of receipt of test item**..... : May 20, 2020
**Date of sampling**..... : May 22, 2020
**Date of Test Date**..... : May 29, 2020-Jun. 28, 2020
**Data of Issue**.....: Jun. 29, 2020
**Result**..... : **Pass**

**Shenzhen CTL Testing Technology Co., Ltd. All rights reserved.**
This publication may be reproduced in whole or in part for non-commercial purposes as long as the Shenzhen CTL Testing Technology Co., Ltd. is acknowledged as copyright owner and source of the material. Shenzhen CTL Testing Technology Co., Ltd. takes no responsibility for and will not assume liability for damages resulting from the reader's interpretation of the reproduced material due to its placement and context.

# TEST REPORT

| Test Report No. : | CTL2005117011-WF03 | Jun. 29, 2020<br>Date of issue |
|---|---|---|

| | | |
|---|---|---|
| Equipment under Test | : | CareWatch Voice |
| Model /Type | : | T01 |
| Listed Models | : | N/A |
| **Applicant** | : | **OneCare, Inc.** |
| Address | : | 114 State Road 46 E Batesville,Indiana 47006 |
| **Manufacturer** | : | **Shenzhen Yinuo Technologies., Ltd.** |
| Address | : | Rm A611, Building AD, Gao Xin Qi Science Industry Park2 Liu Xian Yi Lu Bao An District, Shenzhen, Guangdong, China |

| Test result | Pass * |
|---|---|

*In the configuration tested, the EUT complied with the standards specified page 5.

The test results presented in this report relate only to the object tested.
This report shall not be reproduced, except in full, without the written approval of the issuing testing laboratory.

# ** Modified History **

| Revisions | Description | Issued Data | Report No. | Remark |
|---|---|---|---|---|
| Version 1.0 | Initial Test Report Release | 2020-06-29 | CTL2005117011-WF03 | Tracy Qi |
| | | | | |
| | | | | |
| | | | | |
| | | | | |
| | | | | |
| | | | | |
| | | | | |
| | | | | |
| | | | | |
| | | | | |
| | | | | |
| | | | | |
| | | | | |

## Table of Contents Page

**1. SUMMARY.....5**

1.1. TEST STANDARDS.....5
1.2. TEST DESCRIPTION.....5
1.3. TTEST FACILITY.....6
1.4. STATEMENT OF THE MEASUREMENT UNCERTAINTY.....6

**2. GENERAL INFORMATION.....8**

2.1. ENVIRONMENTAL CONDITIONS.....8
2.2. GENERAL DESCRIPTION OF EUT.....8
2.3. DESCRIPTION OF TEST MODES.....9
2.4. EQUIPMENTS USED DURING THE TEST.....12
2.5. RELATED SUBMITTAL(S) / GRANT (S).....12
2.6. MODIFICATIONS.....13

**3. TEST CONDITIONS AND RESULTS.....14**

3.1. OUTPUT POWER.....14
3.2. PEAK-TO-AVERAGE RATIO (PAR).....15
3.3. OCCUPIED BANDWIDTH AND EMISSION BANDWIDTH.....16
3.4. BAND EDGE COMPLIANCE.....17
3.5. SPURIOUS EMISSION.....18
3.6. FREQUENCY STABILITY UNDER TEMPERATURE & VOLTAGE VARIATIONS.....20

**4. TEST SETUP PHOTOS OF THE EUT.....22**

**5. PHOTOS OF THE EUT.....23**

# 1. SUMMARY

## 1.1. TEST STANDARDS

The tests were performed according to following standards:
FCC Part 27 : MISCELLANEOUS WIRELESS COMMUNICATIONS SERVICES
ANSI/TIA/EIA-603-E March 2016:Land Mobile FM or PM Communications Equipment Measurement and Performance Standards.
FCC Part 2: FREQUENCY ALLOCA-TIONS AND RADIO TREATY MAT-TERS; GENERAL RULES AND REG-ULATIONS
KDB971168 D01: v02r02 MEASUREMENT GUIDANCE FOR CERTIFICATION OF LICENSED DIGITAL TRANSMITTERS
ANSI C63.10: 2013: American National Standard for Testing Unlicensed Wireless Devices

ANSI C63.4: 2014: –American National Standard for Methods of Measurement of Radio-Noise Emissions from Low-Voltage Electrical and Electronic Equipment in the Range of 9 kHz to 40GHz Range of 9 kHz to 40GHz

## 1.2. Test Description

| Test Item | Section in CFR 47 | Result |
|---|---|---|
| RF Output Power | Part 2.1046<br>Part 27.50(d)(4) | Pass |
| Peak-to-Average Ratio | Part 27.50(d)(4) | Pass |
| 99% & -26 dB Occupied Bandwidth | Part 2.1049<br>Part 27.53(h) | Pass |
| Spurious Emissions at Antenna Terminal | Part 2.1051<br>Part 27.53(h) | Pass |
| Field Strength of Spurious Radiation | Part 2.1053<br>Part 27.53(h) | Pass |
| Out of band emission, Band Edge | Part 2.1051<br>Part 27.53(h) | Pass |
| Frequency stability | Part 2.1055<br>Part 27.54 | Pass |

## 1.3. TTest Facility

### 1.3.1 Address of the test laboratory

Shenzhen CTL Testing Technology Co., Ltd.
Floor 1-A, Baisha Technology Park, No. 3011, Shahexi Road, Nanshan, Shenzhen 518055 China

There is one 3m semi-anechoic chamber and two line conducted labs for final test. The Test Sites meet the requirements in documents ANSI C63.4 and CISPR 22/EN 55022 requirements.

### 1.3.2 Laboratory accreditation

The test facility is recognized, certified, or accredited by the following organizations:

**CNAS-Lab Code: L7497**

Shenzhen CTL Testing Technology Co., Ltd. has been assessed and proved to be in compliance with CNAS-CL01 Accreditation Criteria for Testing and Calibration Laboratories (identical to ISO/IEC 17025: 2005 General Requirements) for the Competence of Testing and Calibration Laboratories.

**A2LA-Lab Cert. No. 4343.01**

Shenzhen CTL Testing Technology Co., Ltd, EMC Laboratory has been accredited by A2LA for technical competence in the field of electrical testing, and proved to be in compliance with ISO/IEC 17025: 2005 General Requirements for the Competence of Testing and Calibration Laboratories and any additional program requirements in the identified field of testing.

**IC Registration No.: 9618B**

**CAB identifier: CN0041**

The 3m alternate test site of Shenzhen CTL Testing Technology Co., Ltd. EMC Laboratory has been registered by Innovation, Science and Economic Development Canada to test to Canadian radio equipment requirements with Registration No.: 9618B on Jan. 22, 2019.

**FCC-Registration No.: 399832**

**Designation No.: CN1216**

Shenzhen CTL Testing Technology Co., Ltd. EMC Laboratory has been registered and fully described in a report filed with the (FCC) Federal Communications Commission. The acceptance letter from the FCC is maintained in our files. Registration 399832, December 08, 2017.

## 1.4. Statement of the measurement uncertainty

The data and results referenced in this document are true and accurate. The reader is cautioned that there may be errors within the calibration limits of the equipment and facilities. The measurement uncertainty was calculated for all measurements listed in this test report acc. to CISPR 16 - 4 “Specification for radio disturbance and immunity measuring apparatus and methods – Part 4: Uncertainty in EMC Measurements“ and is documented in the Shenzhen CTL Testing Technology Co., Ltd. quality system acc. to DIN EN ISO/IEC 17025. Furthermore, component and process variability of devices similar to that tested may result in additional deviation. The manufacturer has the sole responsibility of continued compliance of the device.

Hereafter the best measurement capability for CTL laboratory is reported:

| Test | Measurement Uncertainty | Notes |
|---|---|---|
| Transmitter power conducted | ±0.57 dB | (1) |
| Transmitter power Radiated | ±2.20 dB | (1) |
| Conducted spurious emission 9KHz-40 GHz | ±2.20 dB | (1) |
| Occupied Bandwidth | ±0.01ppm | (1) |
| Radiated Emission 30~1000MHz | ±4.10dB | (1) |
| Radiated Emission Above 1GHz | ±4.32dB | (1) |

| | | |
|---|---|---|
| Conducted Disturbance0.15~30MHz | ±3.20dB | (1) |

(1) This uncertainty represents an expanded uncertainty expressed at approximately the 95% confidence level using a coverage factor of k=2.

# 2. GENERAL INFORMATION

## 2.1. Environmental conditions

During the measurement the environmental conditions were within the listed ranges:

| | |
|---|---|
| Normal Temperature: | 25°C |
| Relative Humidity: | 55 % |
| Air Pressure: | 101 kPa |

## 2.2. General Description of EUT

| | |
|---|---|
| Product Name: | CareWatch Voice |
| Model/Type reference: | T01 |
| Power supply: | DC 3.8V from battery |
| Hardware version: | T01_MB_V1.2 |
| Software version: | T01-V2.6.01 |
| **LTE** | |
| Operation Band: | FDD-LTE: Band 4/13 |
| Modulation Type: | QPSK, 16QAM |
| Release Version: | Release 9 |
| Category: | Cat 1 |
| Antenna Type: | LDS antenna |
| Antenna Gain: | -4.69 dBi |

| Channel Bandwidth | Frequency range | Max. EIRP power | Emission Designator |
|---|---|---|---|
| 1.4MHz | 1710.7~1754.3MHz | 61.09mW | 1M13G7D |
| 3MHz | 1711.5~1753.5MHz | 58.34mW | 2M77G7D |
| 5MHz | 1712.5~1752.5MHz | 57.28mW | 4M58G7D |
| 10MHz | 1715.0~1750.0MHz | 53.70mW | 9M17G7D |
| 15MHz | 1717.5~1747.5MHz | 46.56mW | 13M80G7D |
| 20MHz | 1720.0~1745.0MHz | 53.58mW | 18M18G7D |

Note1: For more details, please refer to the user's manual of the EUT.
Note2: Antenna gain provided by the applicant.
Note3: This report only reports band 4.

## 2.3. Description of Test Modes

The EUT has been tested under typical operating condition. The CMW500 used to control the EUT staying in continuous transmitting and receiving mode for testing. Regards to the frequency band operation: the lowest、middle and highest frequency of channel were selected to perform the test, then shown on this report.

| Band | Radiated Emission |
|---|---|
| LTE Band 4 | Z-plane |

| Test Item | Available channel | Test channel | Channel Bandwidth | Modulation | Mode |
|---|---|---|---|---|---|
| Peak-to-Average Ratio | 1710.7~1754.3MHz | 19957(1710.7MHz), 20175(1732.5MHz), 20393(1754.3MHz) | 1.4MHz | QPSK, 16QAM | 6 RB/0 RB Offset |
| | 1711.5~1753.5MHz | 19965(1711.5MHz), 20175(1732.5MHz), 20385(1753.5MHz) | 3MHz | QPSK, 16QAM | 15 RB/0 RB Offset |
| | 1712.5~1752.5MHz | 19975(1712.5MHz), 20175(1732.5MHz), 20375(1752.5MHz) | 5MHz | QPSK, 16QAM | 25 RB/0 RB Offset |
| | 1715.0~1750.0MHz | 20000(1715.0MHz), 20175(1732.5MHz), 20350(1750.0MHz) | 10MHz | QPSK | 50 RB/0 RB Offset |
| | | | | 16QAM | 12 RB/0 RB Offset |
| | 1717.5~1747.5MHz | 20025(1717.5MHz), 20175(1732.5MHz), 20325(1747.5MHz) | 15MHz | QPSK, | 75 RB/0 RB Offset |
| | | | | 16QAM | 16 RB/0 RB Offset |
| | 1720.0~1745.0MHz | 20050(1720.0MHz), 20175(1732.5MHz), 20300(1745.0MHz) | 20MHz | QPSK, | 100 RB/0 RB Offset |
| | | | | 16QAM | 18 RB/0 RB Offset |
| Occupied Bandwidth | 1710.7~1754.3MHz | 19957(1710.7MHz), 20175(1732.5MHz), 20393(1754.3MHz) | 1.4MHz | QPSK, 16QAM | 6 RB/0 RB Offset |
| | 1711.5~1753.5MHz | 19965(1711.5MHz), 20175(1732.5MHz), 20385(1753.5MHz) | 3MHz | QPSK, 16QAM | 15 RB/0 RB Offset |
| | 1712.5~1752.5MHz | 19975(1712.5MHz), 20175(1732.5MHz), 20375(1752.5MHz) | 5MHz | QPSK, 16QAM | 25 RB/0 RB Offset |
| | 1715.0~1750.0MHz | 20000(1715.0MHz), 20175(1732.5MHz), 20350(1750.0MHz) | 10MHz | QPSK | 50 RB/0 RB Offset |
| | | | | 16QAM | 12 RB/0 RB Offset |
| | 1717.5~1747.5MHz | 20025(1717.5MHz), 20175(1732.5MHz), 20325(1747.5MHz) | 15MHz | QPSK | 75 RB/0 RB Offset |
| | | | | 16QAM | 16 RB/0 RB Offset |
| | 1720.0~1745.0MHz | 20050(1720.0MHz), 20175(1732.5MHz), 20300(1745.0MHz) | 20MHz | QPSK | 100 RB/0 RB Offset |
| | | | | 16QAM | 18 RB/0 RB Offset |
| Conducted Emission | 1710.7~1754.3MHz | 19957(1710.7MHz), 20175(1732.5MHz), 20393(1754.3MHz) | 1.4MHz | QPSK, 16QAM | 6 RB/0 RB Offset |
| | 1711.5~1753.5MHz | 19965(1711.5MHz), | 3MHz | QPSK, | 15 RB/0 RB |

| | | | | | |
|---|---|---|---|---|---|
| | | 20175(1732.5MHz), 20385(1753.5MHz) | | 16QAM | Offset |
| | 1712.5~1752.5MHz | 19975(1712.5MHz), 20175(1732.5MHz), 20375(1752.5MHz) | 5MHz | QPSK, 16QAM | 25 RB/0 RB Offset |
| | 1715.0~1750.0MHz | 20000(1715.0MHz), 20175(1732.5MHz), 20350(1750.0MHz) | 10MHz | QPSK | 50 RB/0 RB Offset |
| | | | | 16QAM | 12 RB/0 RB Offset |
| | 1717.5~1747.5MHz | 20025(1717.5MHz), 20175(1732.5MHz), 20325(1747.5MHz) | 15MHz | QPSK | 75 RB/0 RB Offset |
| | | | | 16QAM | 16 RB/0 RB Offset |
| | 1720.0~1745.0MHz | 20050(1720.0MHz), 20175(1732.5MHz), 20300(1745.0MHz) | 20MHz | QPSK | 100 RB/0 RB Offset |
| | | | | 16QAM | 18 RB/0 RB Offset |
| Radiated Emission | 1710.7~1754.3MHz | 19957(1710.7MHz), 20175(1732.5MHz), 20393(1754.3MHz) | 1.4MHz | QPSK | 6 RB/0 RB Offset |
| | 1711.5~1753.5MHz | 19965(1711.5MHz), 20175(1732.5MHz), 20385(1753.5MHz) | 3MHz | QPSK | 15 RB/0 RB Offset |
| | 1712.5~1752.5MHz | 19975(1712.5MHz), 20175(1732.5MHz), 20375(1752.5MHz) | 5MHz | QPSK | 25 RB/0 RB Offset |
| | 1715.0~1750.0MHz | 20000(1715.0MHz), 20175(1732.5MHz), 20350(1750.0MHz) | 10MHz | QPSK | 50 RB/0 RB Offset |
| | 1717.5~1747.5MHz | 20025(1717.5MHz), 20175(1732.5MHz), 20325(1747.5MHz) | 15MHz | QPSK | 75 RB/0 RB Offset |
| | 1720.0~1745.0MHz | 20050(1720.0MHz), 20175(1732.5MHz), 20300(1745.0MHz) | 20MHz | QPSK | 100 RB/0 RB Offset |
| Band Edge compliance | 1710.7~1754.3MHz | 19957(1710.7MHz), 20393(1754.3MHz) | 1.4MHz | QPSK, 16QAM | 6 RB/0 RB Offset |
| | 1711.5~1753.5MHz | 19965(1711.5MHz), 20385(1753.5MHz) | 3MHz | QPSK, 16QAM | 15 RB/0 RB Offset |
| | 1712.5~1752.5MHz | 19975(1712.5MHz), 20375(1752.5MHz) | 5MHz | QPSK, 16QAM | 25 RB/0 RB Offset |
| | 1715.0~1750.0MHz | 20000(1715.0MHz), 20350(1750.0MHz) | 10MHz | QPSK | 50 RB/0 RB Offset |
| | | | | 16QAM | 12 RB/0 RB Offset |
| | 1717.5~1747.5MHz | 20025(1717.5MHz), 20325(1747.5MHz) | 15MHz | QPSK | 75 RB/0 RB Offset |
| | | | | 16QAM | 16 RB/0 RB Offset |
| | 1720.0~1745.0MHz | 20050(1720.0MHz), 20300(1745.0MHz) | 20MHz | QPSK | 100 RB/0 RB Offset |
| | | | | 16QAM | 18 RB/0 RB Offset |
| Frequency stability | 1710.7~1754.3MHz | 19957(1710.7MHz), 20393(1754.3MHz) | 1.4MHz | QPSK, 16QAM | 6 RB/0 RB Offset |
| | 1711.5~1753.5MHz | 19965(1711.5MHz), 20175(1732.5MHz), 20385(1753.5MHz) | 3MHz | QPSK, 16QAM | 15 RB/0 RB Offset |
| | 1712.5~1752.5MHz | 19975(1712.5MHz), | 5MHz | QPSK, | 25 RB/0 RB |

| | | | | | |
|---|---|---|---|---|---|
| | | 20175(1732.5MHz), 20375(1752.5MHz) | | 16QAM | Offset |
| | 1715.0~1750.0MHz | 20000(1715.0MHz), 20175(1732.5MHz), 20350(1750.0MHz) | 10MHz | QPSK | 50 RB/0 RB Offset |
| | | | | 16QAM | 12 RB/0 RB Offset |
| | 1717.5~1747.5MHz | 20025(1717.5MHz), 20175(1732.5MHz), 20325(1747.5MHz) | 15MHz | QPSK | 75 RB/0 RB Offset |
| | | | | 16QAM | 16 RB/0 RB Offset |
| | 1720.0~1745.0MHz | 20050(1720.0MHz), 20175(1732.5MHz), 20300(1745.0MHz) | 20MHz | QPSK | 100 RB/0 RB Offset |
| | | | | 16QAM | 18 RB/0 RB Offset |

## 2.4. Equipments Used during the Test

| Test Equipment | Manufacturer | Model No. | Serial No. | Calibration Date | Calibration Due Date |
|---|---|---|---|---|---|
| LISN | R&S | ESH2-Z5 | 860014/010 | 2020/05/21 | 2021/05/20 |
| Double cone logarithmic antenna | Schwarzbeck | VULB 9168 | 824 | 2020/05/23 | 2021/05/22 |
| Horn Antenna | Ocean Microwave | OBH100400 | 26999002 | 2019/11/28 | 2020/11/27 |
| EMI Test Receiver | R&S | ESCI | 1166.5950.03 | 2020/05/21 | 2021/05/20 |
| Spectrum Analyzer | Agilent | E4407B | MY41440676 | 2020/05/20 | 2021/05/19 |
| Spectrum Analyzer | Agilent | N9020A | US46220290 | 2020/05/20 | 2021/05/19 |
| Spectrum Analyzer | Keysight | N9020A | MY53420874 | 2020/05/20 | 2021/05/19 |
| Controller | EM Electronics | EM 1000 | 060859 | 2020/05/21 | 2021/05/20 |
| Horn Antenna | Sunol Sciences Corp. | DRH-118 | A062013 | 2020/05/23 | 2021/05/22 |
| Active Loop Antenna | Da Ze | ZN30900A | / | 2020/05/23 | 2021/05/22 |
| Amplifier | Agilent | 8449B | 3008A02306 | 2020/05/21 | 2021/05/20 |
| Amplifier | Agilent | 8447D | 2944A10176 | 2020/05/21 | 2021/05/20 |
| Amplifier | Brief&Smart | LNA-4018 | 2104197 | 2020/05/20 | 2021/05/19 |
| Temperature/Humidity Meter | Gangxing | CTH-608 | 02 | 2020/05/22 | 2021/05/21 |
| Power Sensor | Agilent | U2021XA | MY55130004 | 2020/05/20 | 2021/05/19 |
| Power Sensor | Agilent | U2021XA | MY55130006 | 2020/05/20 | 2021/05/19 |
| Power Sensor | Agilent | U2021XA | MY54510008 | 2020/05/20 | 2021/05/19 |
| Power Sensor | Agilent | U2021XA | MY55060003 | 2020/05/20 | 2021/05/19 |
| Spectrum Analyzer | RS | FSP | 1164.4391.38 | 2020/05/20 | 2021/05/19 |
| Wideband Radio Communication Tester | R&S | CMW500 | 101814 | 2020/05/20 | 2021/05/19 |

Test Software

| Name of Software | Version |
|---|---|
| TST-PASS | 1.05 |
| ES-K1(Below 1GHz) | V1.71 |
| e3(Above 1GHz) | 6.111221a |

The calibration interval was one year

## 2.5. Related Submittal(s) / Grant (s)

This submittal(s) (test report) is intended to comply with of the Part 27.

## 2.6. Modifications

No modifications were implemented to meet testing criteria.

# 3. TEST CONDITIONS AND RESULTS

## 3.1. Output Power

**LIMIT**

1 watt EIRP.

**TEST CONFIGURATION**

Conducted Power Measurement

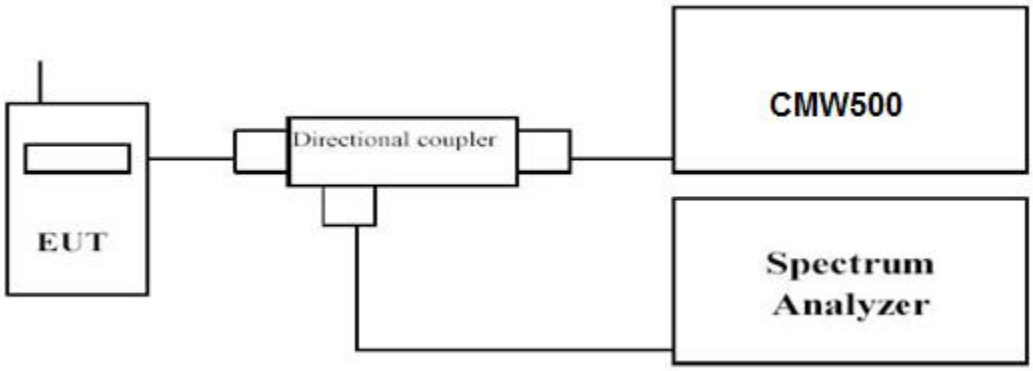


**TEST RESULTS**

Raw data reference to Appendix section 1.

## 3.2. Peak-to-Average Ratio (PAR)

**LIMIT**

The Peak-to-Average Ratio (PAR) of the transmission may not exceed 13 dB.

**TEST CONFIGURATION**

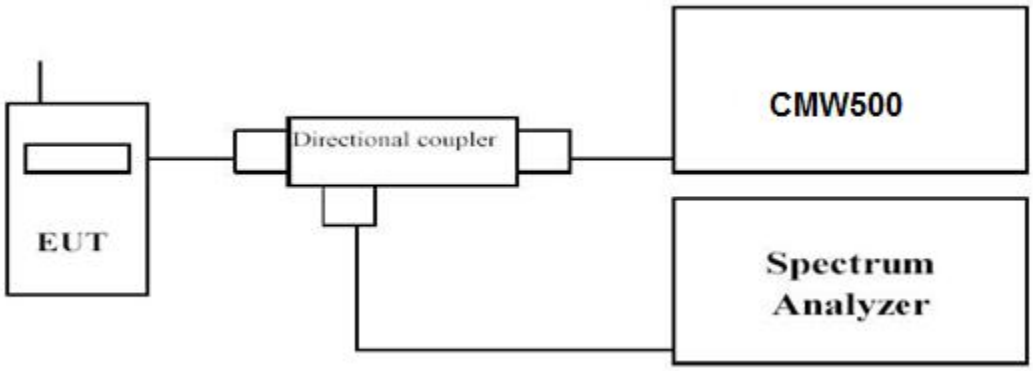


**TEST PROCEDURE**

1. Refer to instrument's analyzer instruction manual for details on how to use the power statistics/CCDF function;
2. Set resolution/measurement bandwidth ≥ signal's occupied bandwidth;
3. Set the number of counts to a value that stabilizes the measured CCDF curve;
4. Set the measurement interval as follows:
   1). for continuous transmissions, set to 1 ms,
   2). for burst transmissions, employ an external trigger that is synchronized with the EUT burst timing sequence, or use the internal burst trigger with a trigger level that allows the burst to stabilize and set the measurement interval to a time that is less than or equal to the burst duration.
5. Record the maximum PAPR level associated with a probability of 0.1%.

**TEST RESULTS**

Raw data reference to Appendix section 4.

## 3.3. Occupied Bandwidth and Emission Bandwidth

**LIMIT**

N/A

**TEST CONFIGURATION**

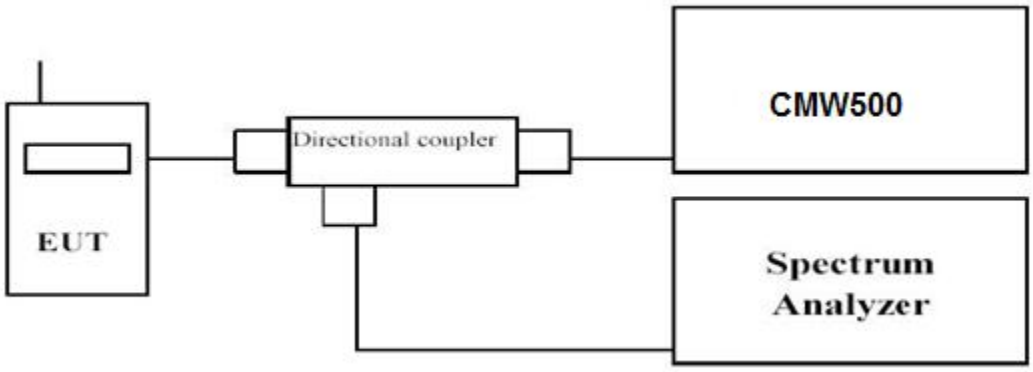


**TEST PROCEDURE**

The transmitter output was connected to a calibrated coaxial cable and coupler, the other end of which was connected to a spectrum analyzer. The occupied bandwidth was measured with the spectrum analyzer at low, middle and high channel in each band. The -26dBc Emission bandwidth was also measured and recorded.
Set RBW was set to about 1% of emission BW, VBW≥3 times RBW.
-26dBc display line was placed on the screen (or 99% bandwidth), the occupied bandwidth is the delta frequency between the two points where the display line intersects the signal trace.

**TEST RESULTS**

Raw data reference to Appendix section 3.

## 3.4. Band Edge compliance

**LIMIT**

According to §27.53 (h): For operations in the 1710–1755 MHz and 2110–2155 MHz bands, the power of any emission outside a licensee's frequency block shall be attenuated below the transmitter power (P) by at least 43 + 10 log10(P) dB.

**TEST CONFIGURATION**

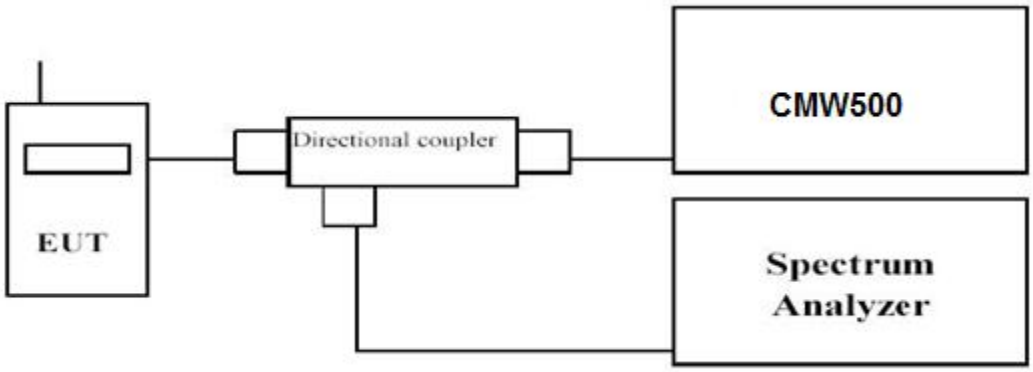


**TEST PROCEDURE**

1. The transmitter output port was connected to base station.
2. The RF output of EUT was connected to the power meter by RF cable and attenuator, the path loss was compensated to the results for each measurement.
3. Set EUT at maximum power through base station.
4. Select lowest and highest channels for each band and different modulation.
5. Measure Band edge using RMS (Average) detector by spectrum

**TEST RESULTS**

Raw data reference to Appendix section 5.

## 3.5. Spurious Emission

**LIMIT**

According to §27.53 (h): For operations in the 1710–1755 MHz and 2110–2155 MHz bands, the power of any emission outside a licensee's frequency block shall be attenuated below the transmitter power (P) by at least 43 + 10 log10(P) dB.

**TEST CONFIGURATION**

Conducted Spurious Measurement:

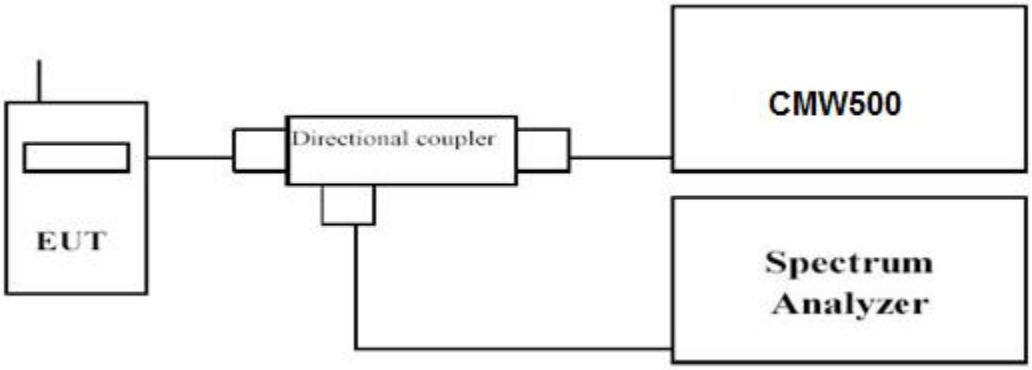


Radiated Spurious Measurement:

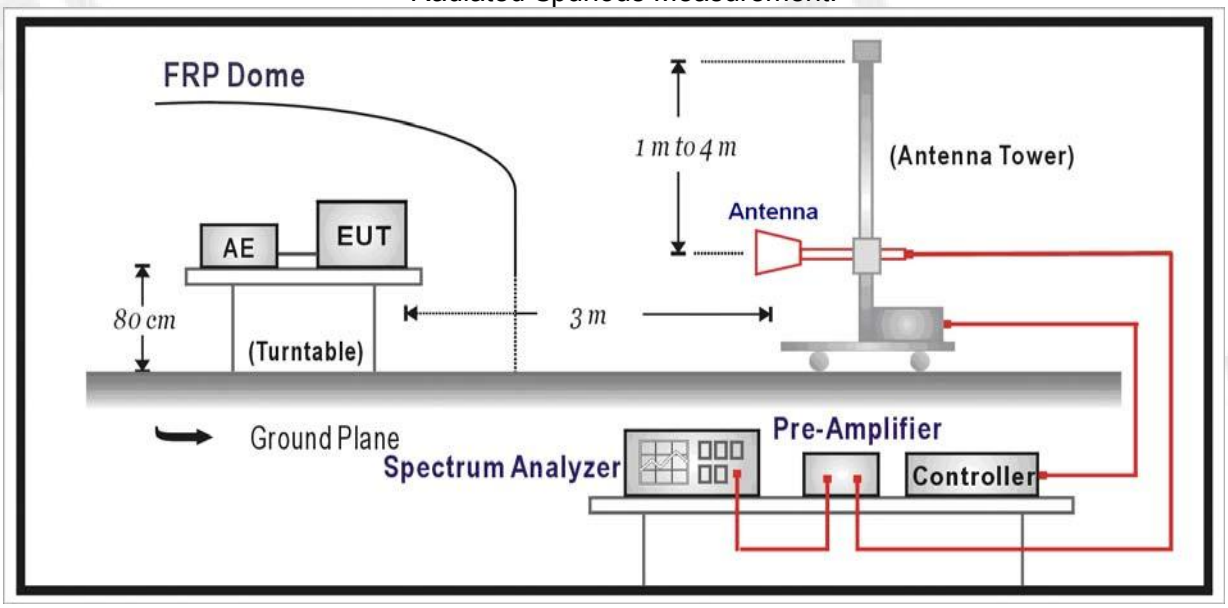


**TEST PROCEDURE**

The EUT was setup according to ANSI/TIA/EIA-603-E

**Conducted Spurious Measurement:**

a. Place the EUT on a bench and set it in transmitting mode.
b. Connect a low loss RF cable from the antenna port to a spectrum analyzer and CMW500 by a Directional Couple.
c. EUT Communicate with CMW500 then selects a channel for testing.
d. Add a correction factor to the display of spectrum, and then test.
e. The resolution bandwidth of the spectrum analyzer was set sufficient scans were taken to show the out of band Emission if any up to10th harmonic.

**Radiated Spurious Measurement:**

a. The EUT shall be placed at the specified height on a support, and in the position closest to normal use as declared by provider.
b. The test antenna shall be oriented initially for vertical polarization and shall be chosen to correspond to the frequency of the transmitter
c. The output of the test antenna shall be connected to the measuring receiver.
d. The transmitter shall be switched on and the measuring receiver shall be tuned to the frequency of the transmitter under test.
e. The test antenna shall be raised and lowered through the specified range of height until a maximum signal level is detected by the measuring receiver.
f. The transmitter shall then be rotated through 360° in the horizontal plane, until the maximum signal level is detected by the measuring receiver.
g. The test antenna shall be raised and lowered again through the specified range of height until a maximum signal level is detected by the measuring receiver.
h. The maximum signal level detected by the measuring receiver shall be noted.
i. The transmitter shall be replaced by a substitution antenna.
j. The substitution antenna shall be orientated for vertical polarization and the length of the substitution antenna shall be adjusted to correspond to the frequency of the transmitter.
k. The substitution antenna shall be connected to a calibrated signal generator.
l. If necessary, the input attenuator setting of the measuring receiver shall be adjusted in order to increase the sensitivity of the measuring receiver.
m. The test antenna shall be raised and lowered through the specified range of height to ensure that the maximum signal is received.
n. The input signal to the substitution antenna shall be adjusted to the level that produces a level detected by the measuring receiver, that is equal to the level noted while the transmitter radiated power was measured, corrected for the change of input attenuator setting of the measuring receiver.
o. The measurement shall be repeated with the test antenna and the substitution antenna orientated for horizontal polarization.
p. The measure of the effective radiated power is the larger of the two levels recorded at the input to the substitution antenna, corrected for gain of the substitution antenna if necessary.
q. The resolution bandwidth of the spectrum analyzer was set at 100 kHz for Part 22 and 1MHz for Part 24. The frequency range was checked up to 10th harmonic.
r. Test site anechoic chamber refer to ANSI C63.

**TEST RESULTS**

Raw data reference to Appendix section 5.

## 3.6. Frequency Stability under Temperature & Voltage Variations

**LIMIT**

According to §27.54, §2.1055 requirement, the frequency stability shall be sufficient to ensure that the fundamental emissions stay within the authorized bands of operation and should not exceed 2.5ppm.

**TEST CONFIGURATION**

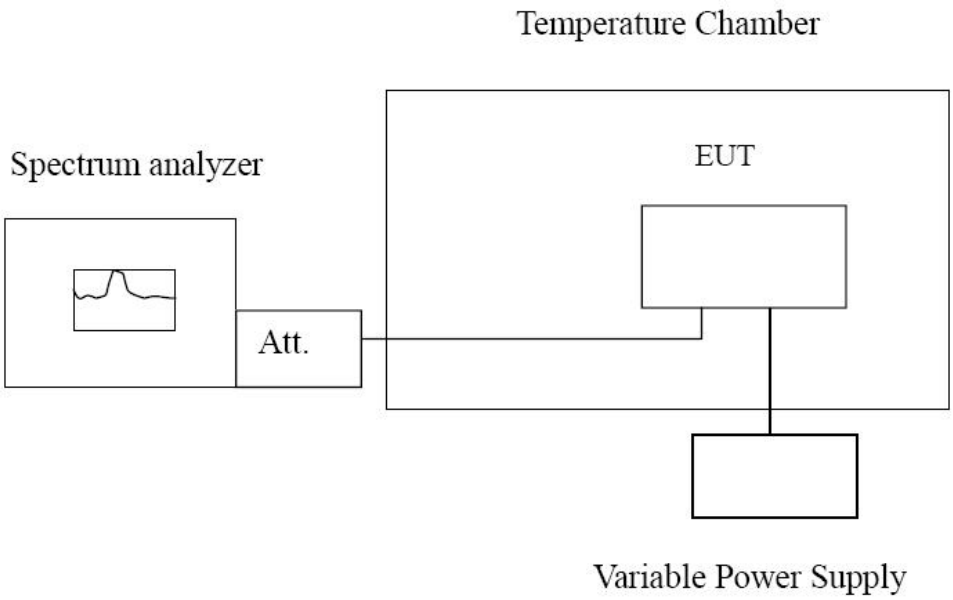


**TEST PROCEDURE**

The EUT was setup according to ANSI/TIA/EIA-603-E

**Frequency Stability under Temperature Variations:**
In order to measure the carrier frequency under the condition of AFC lock, it is necessary to make measurements with the EUT in a “call mode”. This is accomplished with the use of R&S CMW500 DIGITAL RADIO COMMUNICATION TESTER.

1. Measure the carrier frequency at room temperature.
2. Subject the EUT to overnight soak at -30℃.
3. With the EUT, powered via nominal voltage, connected to the CMW500 and in a simulated call on middle channel for LTE band 4, measure the carrier frequency. These measurements should be made within 2 minutes of Powering up the EUT, to prevent significant self-warming.
4. Repeat the above measurements at 10℃ increments from -30℃ to +50℃. Allow at least 1.5 hours at each temperature, unpowered, before making measurements.
5. Re-measure carrier frequency at room temperature with nominal voltage. Vary supply voltage from minimum voltage to maximum voltage, in 0.1Volt increments re-measuring carrier frequency at each voltage. Pause at nominal voltage for 1.5 hours unpowered, to allow any self-heating to stabilize, before continuing.
6. Subject the EUT to overnight soak at +50℃.
7. With the EUT, powered via nominal voltage, connected to the CMW500 and in a simulated call on the centre channel, measure the carrier frequency. These measurements should be made within 2 minutes of Powering up the EUT, to prevent significant self-warming.
8. Repeat the above measurements at 10 ℃ increments from +50℃ to -30℃. Allow at least 1.5 hours at each temperature, unpowered, before making measurements
9. At all temperature levels hold the temperature to +/- 0.5℃ during the measurement procedure.

**Frequency Stability under Voltage Variations:**
Set chamber temperature to 20℃. Use a variable AC power supply / DC power source to power the EUT and set the voltage to rated voltage. Set the spectrum analyzer RBW low enough to obtain the desired frequency resolution and recorded the frequency.
Reduce the input voltage to specify extreme voltage variation (±15%) and endpoint, record the maximum frequency change.

**TEST RESULTS**

Raw data reference to Appendix section 2.

# 4. Test Setup Photos of the EUT

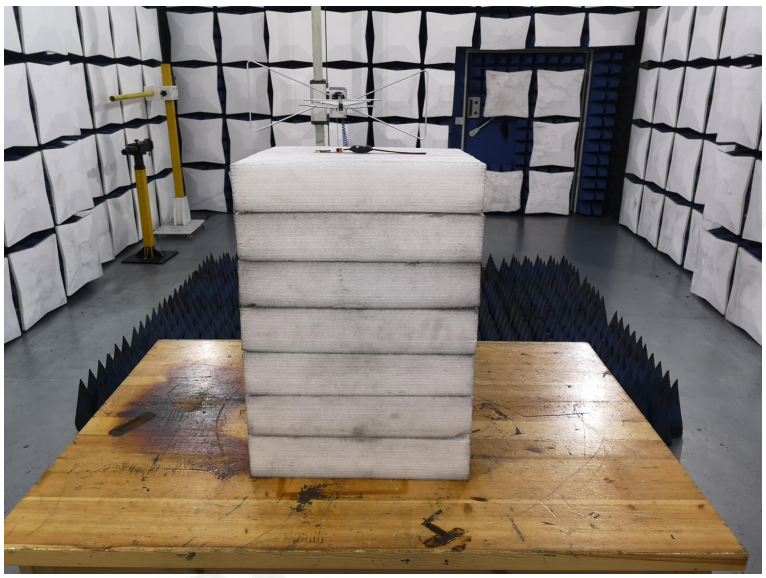

# 5. Photos of the EUT

Reference to the test report No. CTL2005117011-WF01

********** End of Report **********