Product name:
MACH6

AEE UNMANNED AIRCRAFT SYSTEM

Professional • Leading

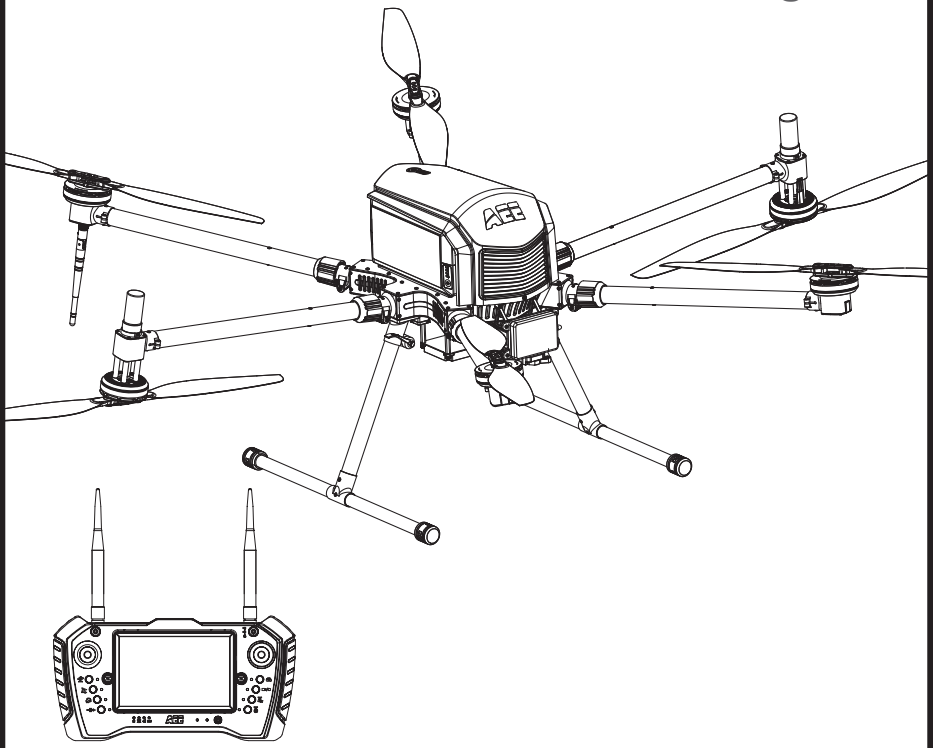

Model Name: Y12

USER'S MANUAL V1.0

Pictures only for reference.
Before flying this aircraft, please read this manually carefully and completely.
Keep it safe for later reference.

Welcome message from the General Manager of AEE Technology Inc.

Good day and thank you for your purchase of the AEE Mach (tm) 6 UAV System. My name is Mike Kahn and I am the General Manager of AEE Technology Inc., a US corporation based in Southern California. About 4 years ago, I decided to design a Commercial UAV System aimed at the professional American Drone Pilot. I wanted to create a system that added value to the drone industry and addressed concerns of Amercian Professional Drone Pilots. I used my 25 year experience in electronics industry to develop a new standard in industrial drones. I paid particular attention to Data Integrity with AEE Mach Series Commercial Drones; there is no cloud just point to point GSC to Aircraft communication. At AEE Technology we develop, design, market, sell and service our systems here in the United States. Transparently, we do manufacturing in China to keep our prices competitve and attractive to the Professional UAV System. But again, Data Integrity is paramount to our systems which do not use any factory installed cloud based technology. Your Trust and customer relationship is our most important goal.

Sincerely,

Mike Kahn

General Manager of AEE Technology Inc.

Table of Contents

1. Introduction.....1

1.1 Introduction.....1

1.2 Safety Precautions.....1

1.3 UAV Preparation.....3

1.4 Installation of remote controller antenna.....11

2. Aircraft 12

2.1 Overview of aircraft 12

2.2 Flight mode 12

2.3 Navigation and Status Lights.....12

2.4 Auto takeoff/landing 13

2.5 One-button route 13

2.6 Auto return 15

2.7 Radar avoidance function 16

2.8 RTK 17

2.9 Point selection flight 18

3. Intelligent Battery 18

3.1 Introduction 18

3.2 Functions 18

3.3 Use of intelligent battery 19

3.4 View battery level 19

4. Illustration and Functional Introduction of Remote Control and Drone Parts.....21

4.1 Illustration and functional introduction of remote control parts and drone parts.....21

4.2 Illustration of drone parts 23

5. Remote Control 24

5.1 Operation of remote control 24

5.2 Remote control on/off 24

5.3 Battery level of remote control 25

5.4 Drone operation 26

5.5 Flight mode switch 29

5.6 Illustration and function for main interface of remote control 30

5.7 Illustration of setting interface 35

5.8 Illustration of Map interface 43

5.9 Route mission 47

6. Flight 58

6.1 Take-off preparation 58

6.2 Requirements of flight environment 58

6.3 Compass correction 58

6.4 Manual on/off 59

6.5 Basic flight 60

6.6 Usage process of GS software route planning task 61

7. FCC Warning.....61

1. Introduction

1.1 Introduction

Thank you for purchasing the AEE Mach6 Hexcopter. This advanced UAV systems offers some key industry leading features including but not limited to : 1) Up to 50 mins flight time, 2) Up to 13 Lbs of paylaod lift, 3) Up to 3 Smart controlable Payloads attached to UAV at the same time.4) Smart battery system which allows for cycle record keeping 5) All weather capability 6) Advance millimeter radar for collision avoidance and works even at night.

1.2. Safety Precautions

☆Do not disassemble or modify the AEE unmanned aircraft system product without permission.

☆Having experienced drone pilots to guide the flight are advised.

☆Avoid starting two drones at close range simultaneously to prevent accidents.

☆Check whether all parts of the product are in good condition. No flight is allowed in case of any damaged parts.

☆Ensure that both the video antenna and the radio antenna are installed correctly for the flight to avoid affecting the flight and video receiving distance or causing damage to the transmitting module inside the drone and remote controller.

☆Do not shut down the remote control and ground station in violation of the regulation during use, so as to avoid unpredictable consequences.

☆Keep away from the running parts, and do not touch and keep away from any rotating parts while the drone's propeller is running. Keep your head away from the propeller to avoid danger. At the same time, ensure that the drone is kept away from small metal objects, so as to prevent danger due to absorption of such objects by the drone.

☆Ensure that the drone is the center of the circle when taking off and landing, and there are no moving people or obstacles within a radius of 30 foot. When operating this AEE unmanned aircraft system product, the drone should only be allowed to fly in a safe area away from the crowds, and it is important to pay attention to your own safety and people around you.

☆Please ensure that each waypoint has a sufficient altitude (the altitude of a waypoint is that relative to the take-off position of the drone) when editing the waypoints in order to prevent the flight route from intersecting with mountains or buildings, which will result in the collision between the drone and mountains or buildings during the flight.

☆Remove the protective rubber plugs when using the power battery, and put the rubber plugs back in place after using to avoid short-circuit damage to the battery.

☆Remove the protective rubber plugs when using the power battery, and put the rubber plugs back in place after using to avoid short-circuit damage to the battery.

☆Be sure to remove all the accessories installed on the aircraft and put them back in place after the flight mission is completed to avoid damage to the accessories due to improper operation.

☆Please charge and discharge batteries at least once every three months to maintain the battery (battery of UAV and remote controller).

☆Hold the fuselage when moving the drone. Do not hold the drone arm or landing gear separately, so as to avoid damage caused by improper use.

☆Keep away from heat sources to avoid the aging deformation or even melting damage of thermoplastic materials of the drone caused by high temperature.

☆Please follow the user's manual and do not operate in violation of local laws and regulations for the safety of your life and property.

1.3 UAV Preparation

1.3.1 Unfolding, locking and folding of drone arm as shown below:

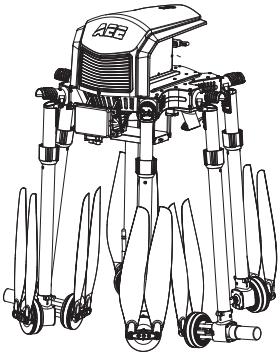

①

Unfold

Hold

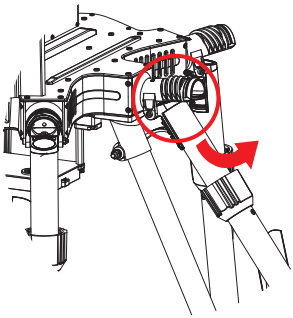

②

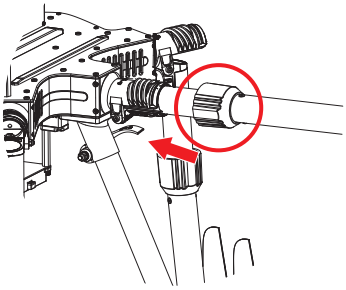

③

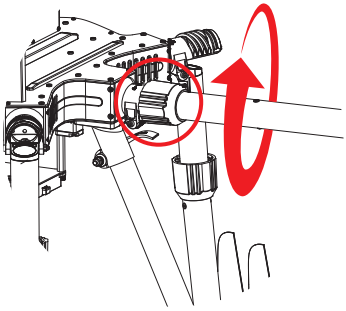

④

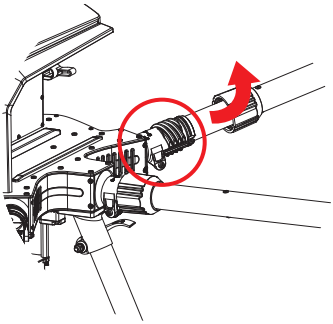

⑤

Complete

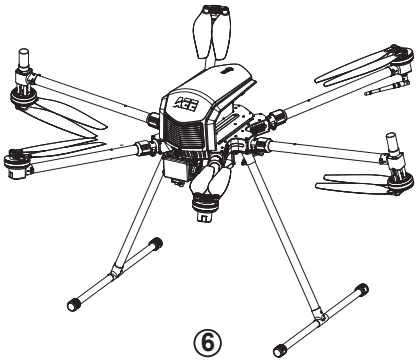

⑥

1.3.2 landing gear quick assembly & disassembly

Assembly & disassembly of long tripod as shown below: Please note there are two leg sizes depending on the type of terrain you are launching in.

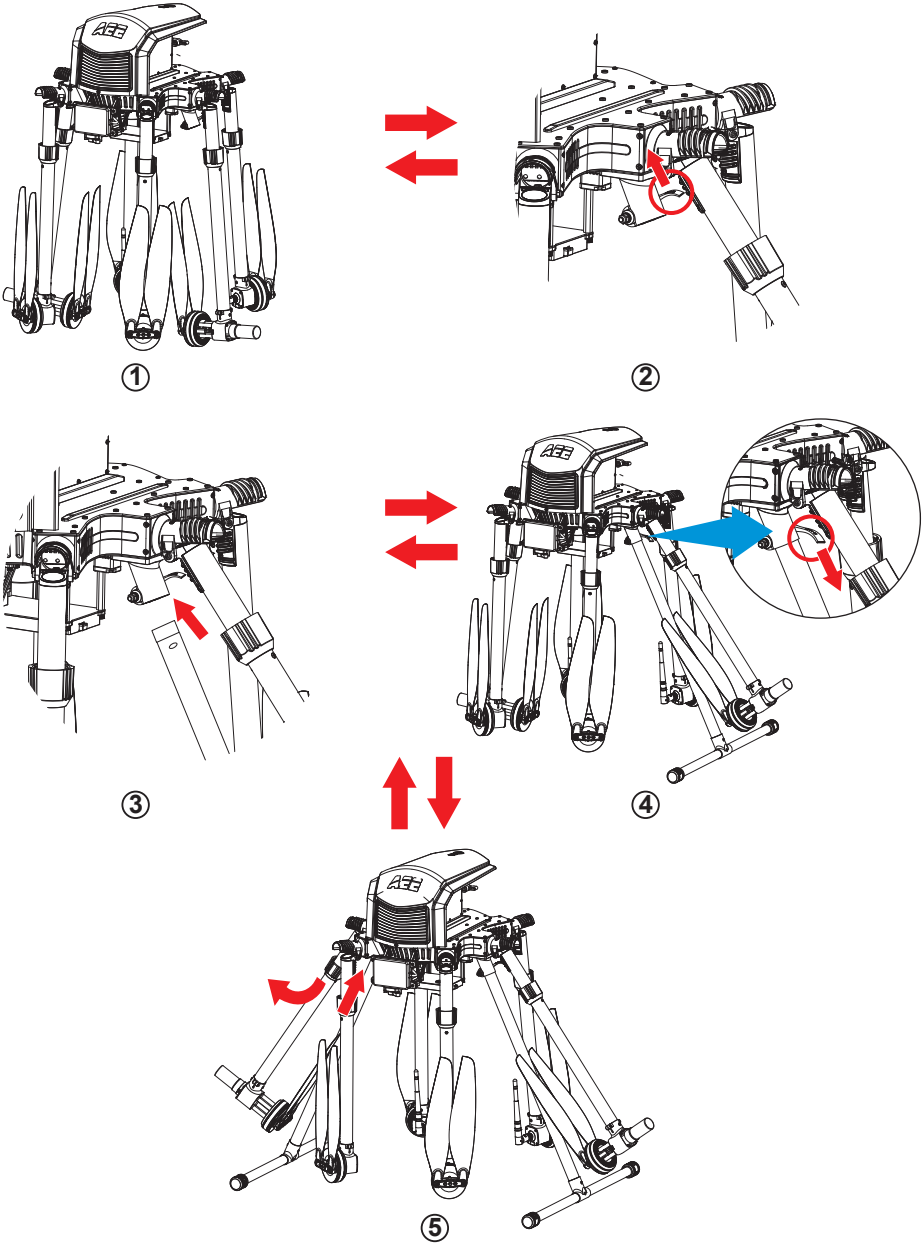

Assembly & disassembly of short tripod as shown below:

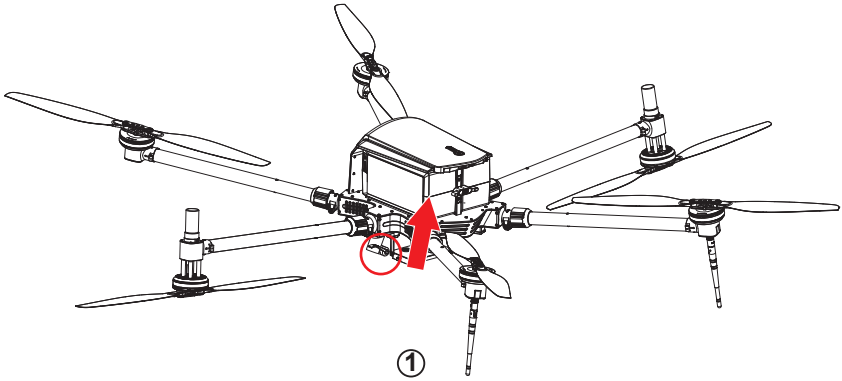

①

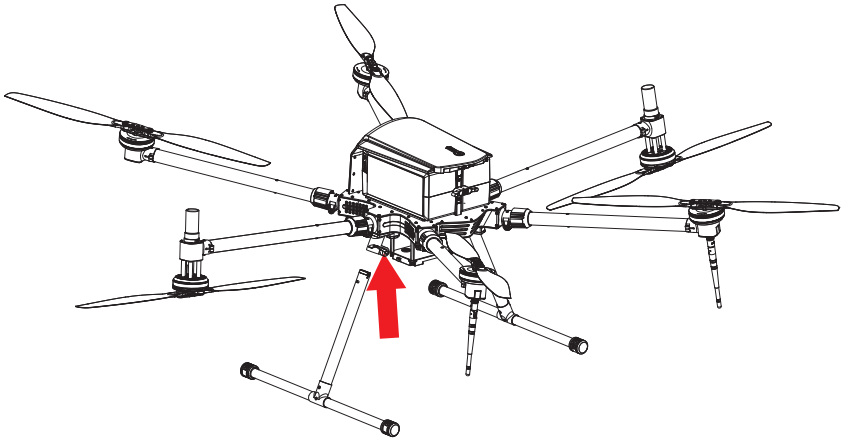

②

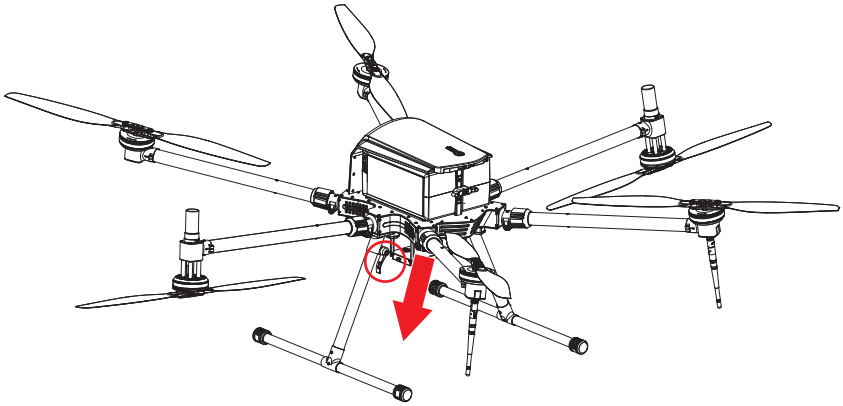

③

1.3.3 Propeller Installation

The positive propeller and counter propeller are marked with "CW" and "CCW" respectively. The propellers are installed at the consequence of positive – counter – positive – counter – positive – counter from the left side of the UAV nose. Once the propellers are matched with the UAV, fasten with screws. (The UAV has 6 rotor arms and multiple rotors; among which, two propellers are different from the rest 4 propellers, please install them carefully). As shown below:

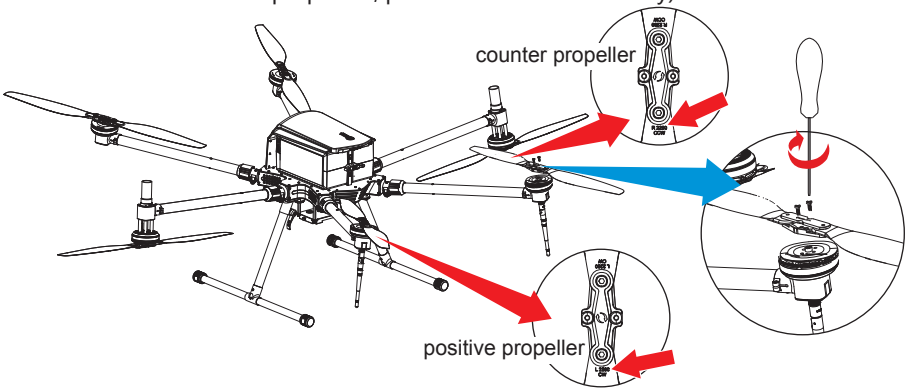

1.3.4 Installation of figure & data transmission antenna and RTK antenna
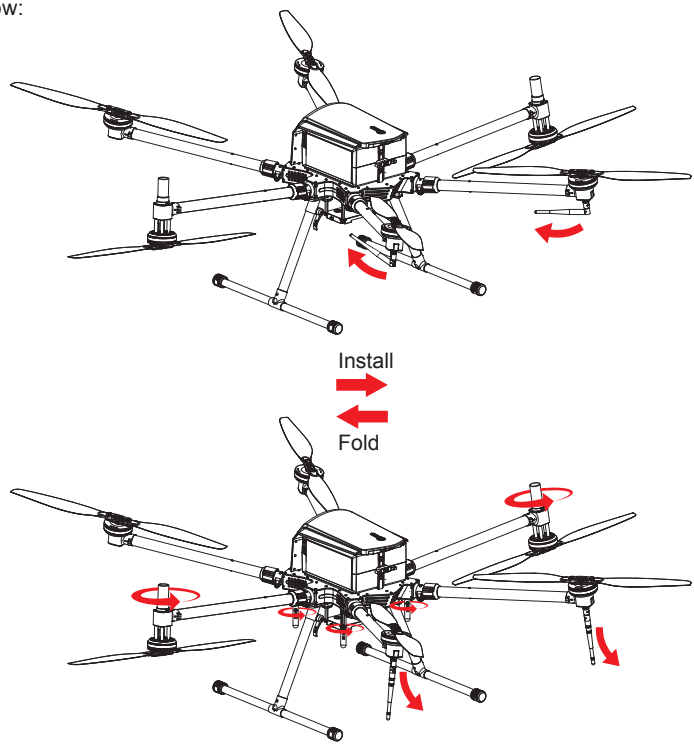
As shown below: