AEE DRONES

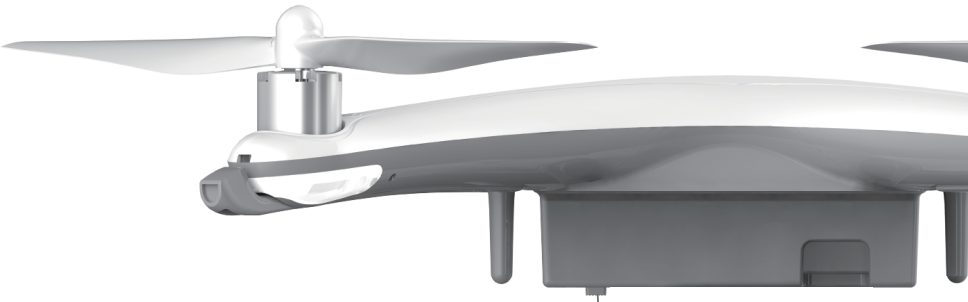

A20S/A22

CONDOR™ FISHERMAN 1000 METER MODEL

USER MANUAL V1.1

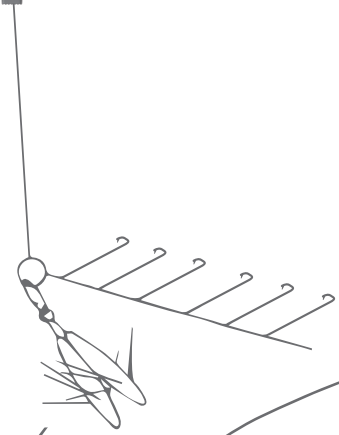

CONDOR A20S/A22 FISHERMAN PACKING LIST

Check the items in the package carefully before use, details as below:

No.	Name	Sketch	Quantity	Description
1	UAV		1	
2	UAV Battery		1	Power of the UAV
3	Newton3 Release		1	A22 Mechanism Release A20S Tension Release only
4	Release Wire		2	
5	Propeller	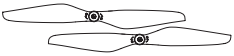	1 set	Including 2 propellers with "P" - marked cap and 2 propellers with "P"-unmarked cap
6	Remote Control		1	
7	Toolset	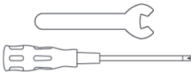	1 set	Including one wrench and one screwdriver for propeller removal
8	Charger	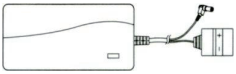	1	100 240V, 50/60Hz Charge the smart battery and remote control
9	Plug Cable (NZ)	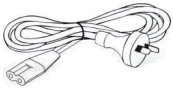	1	
10	User's Manual		1 Set	Including the Quick Start Guide and Warranty Card etc.
11	Bag		1	

Pictures only for reference.

CONTENTS

1. Preface…….....03

2. Set up the drone….....…03

   (1) Toggle Setting

   (2) Insert battery and power on

   (3) Calibrate

   (4) Install propellers

3. Set up the bait….....…07

4. Flight instruction….....…08

   (1) Antenna Position and Angle

   (2) Controller lever

   (3) Stat motors

   (4) Take off

   (5) Bait release

   (6) land

   (7) Pay attentions

   (8) Indicator and error signals

5. Maintenance and Battery storage….....…12

6. Precautions for UAV use….....…13

7. Precautions for battery use and charging….....…14

8. Warning….....…15

9. Limitation of Liability…….....15

10. FAQ….....…16

1. Preface

CONDOR is a hi-tech electronic product integrated with flight functions,equipped with an advanced intelligent flight control system.

The Condor Fisherman is a purpose built fishing drone with onboard NEWTON 3 release mechanism. This drone is fitted with the latest flight control platform and software to ensure drone safety and maximum range during fishing trips.

If you follow all the instructions and set a maximum of six baited hooks with no more than 6 ounces of lead weight and fly only in winds less than 15 knots you can expect hundreds of trouble free sets out of your new Condor Fisherman. We highly recommend you use spectra braid line between 50lbs and 80lbs breaking strain.

What's New? - The Condor Fisherman 1000m:

1. Up to1000 metres casting range.
2. Low battery warning 30 seconds before low battery auto return home switches on. This allows you 30 seconds to release the weight to complete a set before low battery Auto Return Home then takes over.
3. Increased auto return home flight speed.
4. Remaining battery time and drone distance away displayed in large text on remote screen.

2. Set up the drone

(1) Toggle Setting

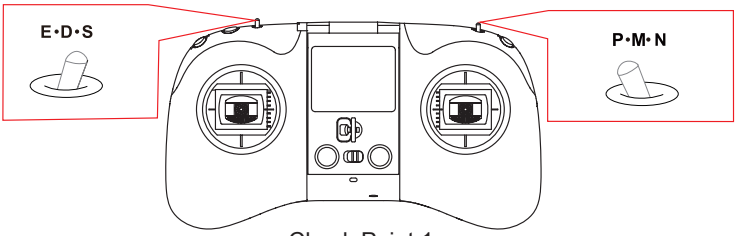

Check Point 1

Set Right Hand Toggle Switch In "P" Position (GPS mode).

Left hand toggle is used to control fly speed. E: slow, D: medium, S: fast. (If you do not use mechanism release, you must set "S" position.)

(2) Insert battery correctly and power on

Please charge batteries before you want to fly, the more power the battery has, the safer your flight is.

Check If the Battery is Inserted into the slot correctly and the latch is fully engaged.

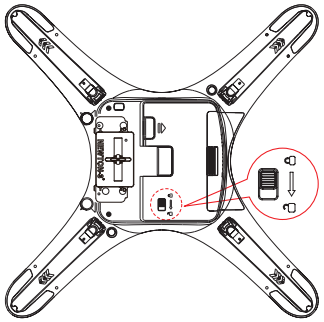

Check Point 2. Insert Battery Correctly

Push the battery into the slot until the highlighted latch blocks the battery.

Pull the latch a little and push the battery forward a little so the battery holds out the latch.

Push the battery in quickly so the latch snaps back into place with a loud click with the latch returned securely into the lock position. Check latch is seated correctly.

Interface of the Remote Control

The Remote Control screen must show to the following modes before calibration. Only fly in GPS mode when fishing.

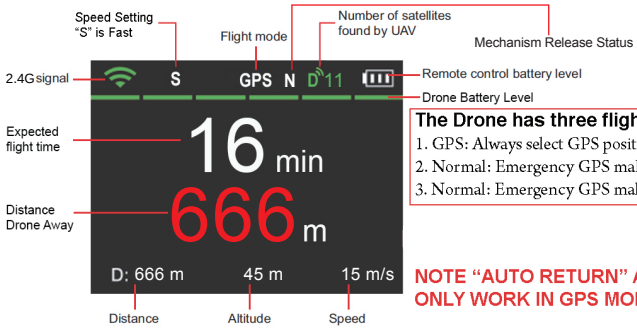

The Drone has three flight modes:

1. GPS: Always select GPS position mode for Fishing
2. Normal: Emergency GPS malfunction over-ride, drone will drift in wind
3. Normal: Emergency GPS malfunction over-ride, drone will drift in wind

NOTE "AUTO RETURN" AND "HOME" FUNCTIONS ONLY WORK IN GPS MODE!

Warm up stage, remote connects to drone, finds satellites. Takes less than 2 minutes.

Turn on the remote by the switch on the topside center of the remote.

Turn on the power to the drone by activating the button on the battery, one short press, followed by press and hold until the drone goes beep, beep and battery lights stay on.

Wait until the remote shows it is connected to the drone, and the crescent taillight at the top back of the drone becomes solid green.

GPS satellites are acquired during this time and the number of satellites connected show at the top right hand side of the screen after a capital “D”.

You should wait until you have 11 to 15 satellites before you calibrate the drone, the more satellites showing the better. The screen should show as above.

(3) Calibrate

For fishing, launching and calibration the two top remote toggle switches MUST be in the correct positions. The drone must be in GPS mode for return home function to work.

Right switch toward remote center marked “P” = GPS mode.

Do not calibrate the compass in high-intensity magnetic fields (like magnetic mines, parking lots, building areas with underground reinforce concrete or large-sized steel towers).
※ Do not carry any ferromagnetic objects, like keys, mobile phone, etc., close to the drone or remote while calibrating.

① Push and hold the left joystick (A) in bottom center position and press the Auto-Return-Home button (B) 10 times or more quickly until the remote screen displays “Compass Calibrate” as shown below. The two tail led lights on the drone will flash slow yellow in calibration mode.

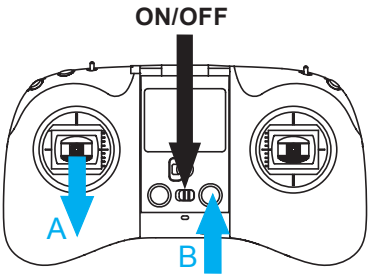

② Lift the drone in horizontally with the quarter moon shaped curved top light nearest your chin and rotate yourself counter clockwise with the drone held horizontally, rotate continuously for just over 360 degrees until the two bottom tail lights of the drone change from flashing yellow to slow flashing green.

③ Change the drone to a vertical position pointing down with the quarter moon shaped curved top led up and toward you and nearest your chin. Rotate yourself just over 360 degrees counter clockwise until the bottom taillights of the drone change from flashing green to solid green.

④ After the taillights underneath turn solid green the screen of the remote will display the battery time and distance from the remote to drone. You are ready to fly and test return home function. (Read takeoff instructions below first.) The drones height “H” and speed “S” in meters per second are displayed at the bottom of the remote screen.

Calibration (view seen from perspective of person doing the calibrating)

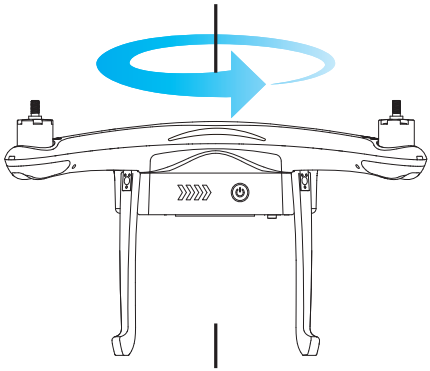

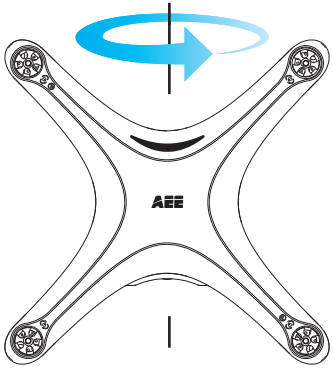

When you are flying in a new location or if the drone does not hover steady in the air, you must calibrate the drone. The minimum requirement is to calibrate once per day in each new area before you fish. You should also re-calibrate if the drone behaves erratically at all during the day (very rare). The calibration is remembered by the drone between sets even though the drone and remote are turned off after each set. It is not necessary to calibrate for every set of the day if you stay in roughly the same place.

(4) Install propellers

Install The Propellers Correctly. Left hand and right hand threads must be on correct motors. “P” propellers go to “P” motors and are left hand thread, unmarked props go to unmarked motor bases and are right hand thread.

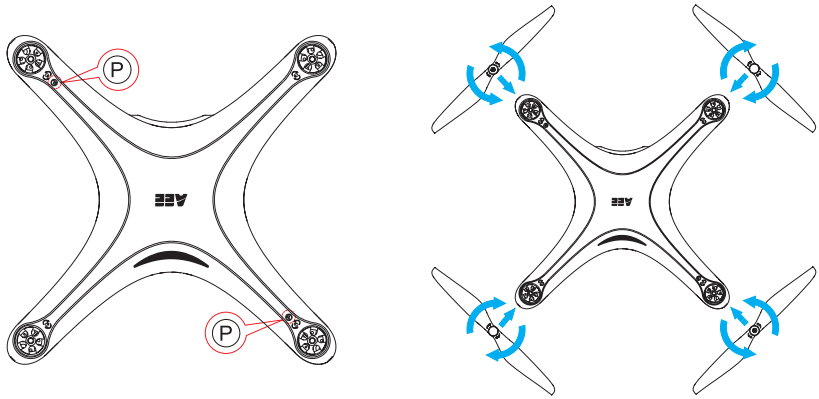

Left hand thread propeller has a mark “P” on the propeller and fastens to motor with a “P” marked on the arm of the drone near the motor. Right hand thread propeller has no marks on the propeller and no marks on the arm of the drone.

- Rotating counter clockwise fastens propellers marked “P”.
- Propellers with no mark are fastened by clockwise rotation.

After a propeller is carefully wound onto the motor, hold the motor while turning the propeller to lightly tighten it finger tight. **Do not cross thread or over tighten the propellers, if you do cross-thread a prop get a new one!**

3. Set up the bait

The Newton Release Clip is an inertia clip that releases at a fixed load, it is an incredibly safe release system. If you get a reel tangle, the line twists round the rod tip, or anything else prevents line going out freely, the clip will automatically release.

The Newton clips are set to release at 950 grams tension. This ensures the Condor drones load carrying and flight stability are kept well within safe limits. Do not adjust the clip for higher release pressures, if you are having problems with early releases it is likely your jerky takeoff technique, carrying excess weight, or too much drag on your fishing reel that causes such problems.

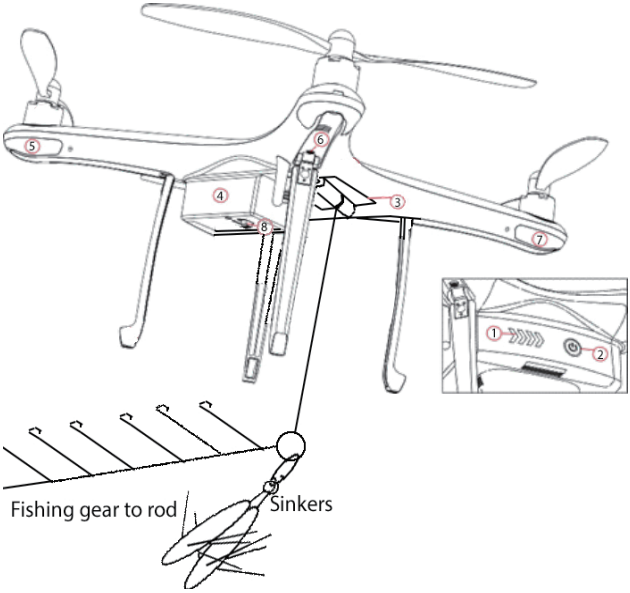

1. Battery Indicator Lights
2. Battery On – Off Button
3. Newton 3 Release Clip
4. Battery
5. Rear Green LED
6. Leg Lock Release Button
7. Front White LED
8. Battery Lock

Note: The release wire loop connector connects with one wire loop into the Newton 3 release clip and the loop at the other end connects to the weights and 6-hook section with the clip on the end of the hook section. The wire is laid straight in front of the drone prior to take off and keeps the line well away from the propellers during take off and release actions. **Do not use the drone for fishing without the correct release wire!**

4. Flight Instruction

(1) Antenna Position and Angle

When flying at distance, the optimal communication range is two ariel parallel and point out to the drone of the remote.

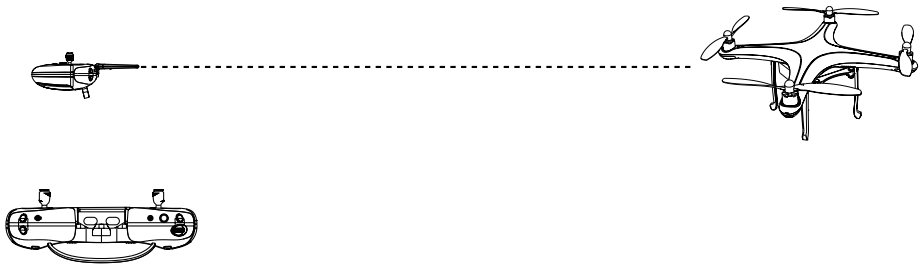

（two ariel parallel, point out to the drone).

(2) Controller lever

The left hand controller lever controls up, (press lever forward), Down, (pull lever back), Rotate Anti-clockwise, move lever left; Rotate Clockwise, move lever right.
The right hand lever controls forward, (press lever forward), backward, (pull lever backwards).
The right hand lever also controls drift left and right, (move right lever left or right for left or right flight).

When you press forward the drone goes forward and opposite the direction of the green taillights. Ensure the green taillights are pointing at the remote to keep drone remote control aligned with the remote. Use the left hand control lever to align the drone with the remote and refine your setting angle at height before you commence setting. When setting only use the right hand control lever so you don't spin the drone out of line and get confused. Forward will always be forward from when you are standing aligned with the set if the green taillights are closest to you. Test this in a park before you fish.

(3) Start motors

Only fly in a large clear flat area like a park or field well away from houses, trees, power lines and any other obstacles. To start the drone idling after calibration, pull both levers down at 45 degrees towards the opposite outside corners of the remote.

As soon as the motors start release the levers and the drone motors will idle with the drone on the ground.

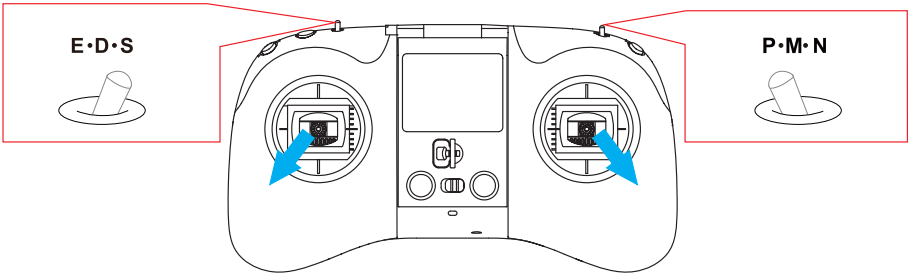

This lever position is also the emergency shutdown so NEVER pull both levers down at 45% outwards when flying as you will crash your drone due to motor shutdown. Use one lever at a time while learning to avoid any issues.

(4) Take off

Keep enough safe distance away from the drone (at least 5 meters).

Do not ever fly a drone over people; it is illegal and dangerous, more so if you have the weight attached to the clip. If a fishing weight fell out from height onto someone it could cause serious injury or death.

To take off push the left hand lever forward on the remote to go straight up, do not use any other direction with the controls when launching until you are at least 5 meters high otherwise the drone may fall over during launching if it catches on the ground and you may damage the propellers or drone.

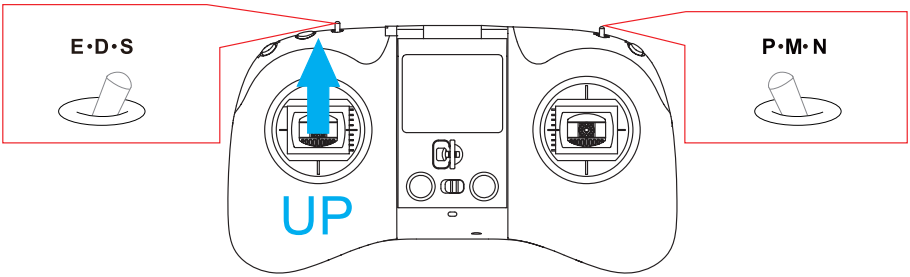

(If you find the drone spin around in circles, lift it up to 30 meters, wait until it hover steady, and then land the drone and do re-calibration).

If you have calibrated with less than 11 satellites and the drone flies erratically on take off it is because you have too few satellites and the drone cannot get an accurate GPS fix or, if you have previously calibrated the drone correctly, done a set and turned everything off and have restarted too quickly and have taken off with to few satellites acquired, you need to land the drone and recalibrate.

If the drone does not respond correctly to the control, switch to N M mode on the top right hand switch to kill the GPS and after the drone stabilises switch back to GPS mode. If the drone is stable land it manually.

If the drone does not stabilise switch back to N or M mode and land manually in that mode, in N and M mode you will need to counteract any wind drift as you land as the GPS is not connected. Auto return home does not work in M and N modes.

So, ALWAYS check number of satellites acquired before take off! The number of satellites is displayed on the top right hand of the screen and is preceded by a capital ‘D’.

After the drone hover steady, you can lift it to ideal altitude (generally over 30 meters) and fly out by push right lever forward.

(5) Bait release

For A22 users, When the drone reaches the desired distance offshore, you just need to press ‘return’ button (the drone will release the bait and then return to the home point automatically).

Only if you find the bait is not released, you can try ‘release’ button.

If there is any abnormal (such as wifi lost, reach its fence, low battery), the combination of ‘release’ and ‘auto return’ would be excuted.

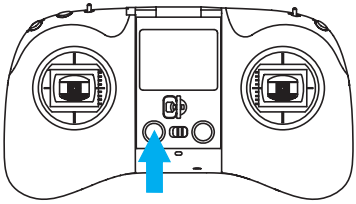

(For A20S users, or If you do not want to use mechanism release, stop the reel or stick your hand over the spool (on eggbeater reels), with the drone still going at full speed. This provides the inertia to release the fishing gear from the clip instantly.)

(6) land

There are two types of landing. The first is auto land under ‘auto return’ mode. The drone will land to the home point by itself. You can still operate right level while it is landing. Motor cut off is automatic.

The second is manual land.

After you manually land the Drone, or hand catch it, pull the left joystick down to the bottom center and hold for 3s until the motors stop rotating, (this method is recommended in normal cases). If hand catching the drone must be held still to shut down.

(7) Pay attentions

Drone battery’s power

Press the button on the front of the drone battery once. The leds on the battery will indicate the power level of the battery by solid lit LED’s, each solid light is 25% charge. Flashing LED’s show discharged level. For example three solid LED’s and one flashing indicates 75% or more charge.

Never start a set if battery time left is less than 9 minutes. Nine minutes is usually enough time to safely set 500 metres.

The Auto Return Home low battery is set to be sufficient for 500 metres. For distances over 500 metres we suggest more than 12 minutes run time should be showing on the remote screen. **To warn you of this the colour of the text on the remote screen will shift towards red when the drone beyond 500 metres, do not rely on low battery return beyond 500 metres.**

(8) Drone indicator lights and error signals

Drone Indicator Lights and Error Signals.

System Status	UAV			
	White Logo LED	Green Tail LED	White Front Arm LED	Red/Green/Blue Rear Arm LED
Powering on (Power-on self-test)	Off	Off	Remain on	Off
Warming up	Fluctuating	Off	Remain on	Flash in blue, green and red by turns
Powered on	Fluctuating	Remain on	Remain on	Same as the relevant flight mode LED
GPS mode	Fluctuating	Remain on	Remain on	Remain green
NORMAL mode	Fluctuating	Remain on	Remain on	Remain yellow (red + green)
Visual positioning mode	Fluctuating	Remain on	Remain on	Remain blue

Low power	Fluctuating	Flash slowly	Level-1 alarm: flash slowly (1s on and 1s off. The UAV will auto return to home in 30 seconds Level-2 alarm: flash quickly (0.1s on and 0.1s off. The UAV will auto return home in 5s)	Level-1 low power: both the front and rear (red) arm LEDs flash slowly Level-2 low power: both the front and rear (red) arm LEDs flash quickly
System error (smart battery error)	Fluctuating	Flash slowly	The front and rear (red) arm LEDs flash alternately.	
Calibrating	Fluctuating	Flash slowly	Remain on	Compass calibration: At the beginning: flash slowly in yellow In the process: flash slowly in green then solid green.
Calibrated correctly	Fluctuating	Remain on	Remain on	Same as the relevant mode LED

5. Maintenance and battery storage

Avoid getting sand in the drone or remote. If there is any sand in the motor, battery dock or remote, use a brush or vacuum to clean it all out. Hand catching or use of take off pads help reduce sand issues.

Charging The Remote Batteries

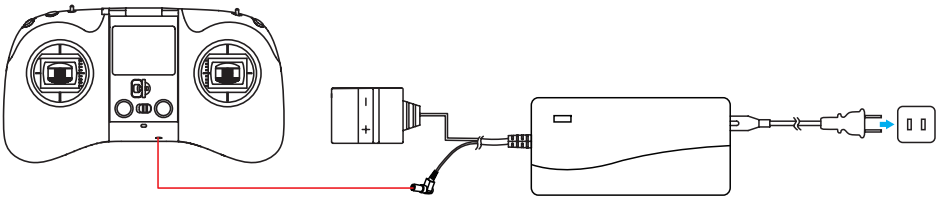

Only use the AEE charger to charge the remote and drone battery.

Charging The Drone Battery

Connect + to + and – to –. The flap on the charger plug protects the small battery pins when charging.

IMPORTANT

Store the batteries at around 20-30% charge or you will shorten the battery life or damage the battery. Charge batteries the day before you go fishing. Do not store fully charged. Flashing red indicates the battery is charging, solid red LEDs indicate full charge. Do not overcharge or leave batteries on the charger unattended.

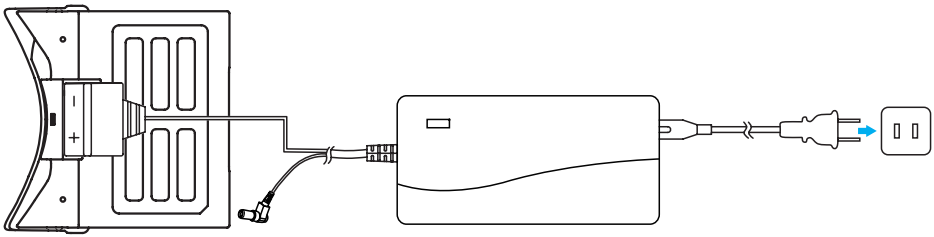

6. Precautions for UAV use

Check the following items one by one before each flight:

(1) Check if all components are in good condition. Do not start the flight if any component is aged or damaged.
(2) Make sure the drone battery and remote control battery are fully charged.
(3) To prevent communication interference, do not use 3 or more drones simultaneously in an area (of football field size) or use the drones near 3 or more high-power 2.4G (Wi-Fi) equipment.
(4) Make sure the drone load is not excessive.
(5) Power on the UAV and remote control in no particular order before taking off. Power off the drone and remote control successively after landing.

(6) Check if the propellers and motors are installed properly and reliably. Make sure the forward-rotating propeller and counter-rotating propeller are put in their places. To prevent cuts, do not get close to or come into contact with the rotating motors or propellers.
(7) Make sure no person or any other obstacle in the circle about 5m~10m around the take off point before taking off or landing.
(8) Select a open flying space with no tall buildings or compass accuracy will be affected by buildings that use steel bars.
(9) This drone cannot be used in the Antarctic circle or Arctic circle.
(10) Select a safety zone away from the crowd, obstacles, high-voltage wires and no-fly zones for flying and keep yourself safe.
(12) To prevent communication errors, do not use this product in complex electromagnetic environments.
(13) To prevent component damage or unpredictable consequences caused by inside vapor condensation, do not use or store this product in humid environments.
(14) For your safety and product safety, do not use this product in poor weather conditions such as lightning, rain, snow, strong wind or sandstorm.
(15) To protect its thermoplastic materials against accelerated aging, deformation and melting at high temperatures, keep this product away from heat sources.
(16) Beginners shall operate the UAV under the guidance of professionals. Never push or pull the joystick quickl, accelarate and stop slowly.
(17) For your own and property safety, always follow this Manual. Do not disassemble or modify the drone without permission.
(18) Read this Manual and the relevant online help and videos carefully before the flight. No flight is allowed in any no-fly zone specified by laws or regulations.

7. Precautions for battery use and charging

The Li-polymer battery is a hazardous material. Please follow the precautions below to use it:
(1) Do not dip the battery in water. If the battery will be idle for long, store it in a cool and dry place.
(2) Place the battery beyond the reach of children.
(3) Do not use or store the battery near any heat source, like fire or furnace.
(4) Charge the battery with an AEE authorized charger only.
(5) After installing battery, make sure the battery fastener is securely latched.
(6) Do not throw the battery into fire or heat it.
(7) Do not use wires or other metal objects to short-circuit the battery's anode and cathode.
(8) Do not transport or store the battery together with metal objects.
(9) Do not impact or throw the battery or expose it to any hard impact.
(10) Do not use nails or other sharp objects to pierce the battery housing. Never hammer or step on the battery.
(11) Do not decompose the battery in any way (do not disassemble, punch or cut it; never try to repair it).
(12) To maintain the battery's performance and service life, do not use or store the battery in extremely hot environments (like in direct sunlight or in a car in hot days), or it may overheat to catch fire (spontaneously combust).
(13) To avoid the dangerous accidents caused by electronic protector damage, do not use the battery in a strong-static place.
(14) If any electrolyte splashes into your eyes in case of battery leakage, rinse your eyes with clear water and ask for medical help immediately. Your eyes may be injured if not treated in time.

(15) Remove it from the UAV, remote control or charger immediately and stop using it if the battery smells, overheats, deforms, discolors or has any other anomaly.
(16) Use only AEE supplied batteries.
(17) Do not use it if the battery leaks, bulges, smells or is broken.
(18) Never allow the battery to contact any liquid. Do not expose the battery to rain or put it in humid places.
(19) Do not place the battery in any microwave oven or pressure vessel.
(20) Remove the battery when the UAV is not in use. To prevent power interface damage, do not remove the battery until the UAV is powered off.
(21) To prevent battery damage, do not place the battery near strong static or electromagnetic waves.
(22) Do not place heavy objects near the battery or charger, or they may fall on the battery.
(23) To charge the battery, place the battery and charger on the ground free of flammable and combustible materials and keep an eye on the charging process to prevent accidents.
(24) Never contact the electrolyte and electrolytic gas inside the battery. They are harmful to your health.
(25) Replace the battery after 300 charging and discharging cycles.
(26) To prevent burns, do not touch the UAV battery cells after the flight.
(27) Do not throw the damaged or unusable battery away irresponsibly. Follow the local standards and regulations to dispose the waste battery. Contact your local solid waste administration or battery stores for more information.
(28) Do not charge the UAV battery until it cools down to the room temperature after using.
(29) To save battery energy, the battery will be auto shut down if the flight is not started (the propellers are not started) in 10min after the battery is powered on, whether installed onto the drone or placed separately.
(30) The battery supports power-off delay: cut off the power 4s after receiving the shutdown instruction in order to save flight data.
(31) If the battery will be idle for long, discharge it to 40%~50% power (individual cell: 3.7V~3.9V) and store it in the special battery box. To keep the battery active, charge and discharge it every three months.
(32) Long-term storage conditions: 23±5°C temperature and 65±20% RH.
(33) For safe battery use, refer to our Disclaimer for more precautions.

8. Warning

Install the propellers correctly without damaging the product, follow the direction marks strictly to turn them with appropriate pressure.

9. Limitation of Liability

We shall not be held liable for any personal injury or property loss, whether direct or indirect, caused in the following cases:
(1) By your poor physical or mental condition, such as drunk, drugged, anesthetized, dizzy, weak or sick;
(2) By your subjective intent;
(3) The emotional damages caused by accidents;
(4) You fail to follow this Manual to install or operate the product;

(5) The UAV functions improperly as you modify any component or accessory or use any non-AEE replacement without permission;
(6) You use any non-AEE product or imitations;
(7) By your mis-operation or poor subjective judgment;
(8) The UAV functions improperly due to natural wear and tear, corrosion or aged wires;
(9) The UAV crashes as you fail to land it upon alarm signals (for example, the red LED flashes quickly);
(10) You force a flight despite the fact that the UAV is in non-normal condition (any water, oil, soil, sand or any other unknown substance is found inside the product; any main component has an obvious fault; or there is any obviously defective or missing accessory);
(11) You start a flight when the UAV is placed in a place with magnetic interference, radio interference or no-fly zone (defined by the government), you stand against the light, your vision is low, blurred or hindered by any obstacle or the flight conditions are otherwise unfavorable;
(12) You operate the UAV in poor weather conditions, such as rain, strong wind (above force 4), snow or hail;
(13) The UAV encounters any impact, overturn, fire, explosion, lightning stroke, storm, tornado, rainstorm, flood, tsunamis, ground settlement, ice settlement, cliff fall, avalanche, hailstorm, mudslide, landslide or earthquake;
(14) Any data or audio/video material acquired through the UAV constitutes an infringement;
(15) By any flight against this Manual's instructions;
(16) By your violation of any local law;
(17) Other losses beyond the scope of our liability.

10. FAQ

(1) The UAV disappears in my field of view, Signal is disconnected and "Connection Lost" shows on screen. What can I do?

If Wi-Fi connection is lost, the drone will automatically return home if

1. Drone has been correctly calibrated.
2. GPS flight mode "P" was selected for the flight.
3. Battery power is sufficient.

If the ground station connects the drone successfully during the auto return you can cancel Auto Return and regain control. Push the auto return Home button to cancel the Home function or leave it and the drone will Auto Land.

ALWAYS CALIBRATE AT EACH NEW SPOT AND ALWAYS USE GPS MODE "P" FOR MAXIMUM DRONE SAFETY WHEN FISHING

(2) How can I manually land the Drone steadily?

Use Auto Return Home for the steadiest landings. Manual landings and hand catching are best left to experts.

PS:
Provided for reference, this Manual is subject to change without further notice. Visit our official website https://www.fishingtacklesale.co.nz/files/Condor_Fisherman_1000_User_Guide.pdf for the latest Condor Fisherman 1000 Drone User's Manual.

FCC Caution.

This device complies with part 15 of the FCC Rules. Operation is subject to the following two conditions:
(1) This device may not cause harmful interference, and
(2) this device must accept any interference received, including interference that may cause undesired operation.

Any Changes or modifications not expressly approved by the party responsible for compliance could void the user's authority to operate the equipment.

Note: This equipment has been tested and found to comply with the limits for a Class B digital device, pursuant to part 15 of the FCC Rules. These limits are designed to provide reasonable protection against harmful interference in a residential installation. This equipment generates uses and can radiate radio frequency energy and, if not installed and used in accordance with the instructions, may cause harmful interference to radio communications. However, there is no guarantee that interference will not occur in a particular installation. If this equipment does cause harmful interference to radio or television reception, which can be determined by turning the equipment off and on, the user is encouraged to try to correct the interference by one or more of the following measures:
-Reorient or relocate the receiving antenna.
-Increase the separation between the equipment and receiver.
-Connect the equipment into an outlet on a circuit different from that to which the receiver is connected.
-Consult the dealer or an experienced radio/TV technician for help.

The UAV complies with FCC radiation exposure limits set forth for an uncontrolled environment. It should be installed and operated with minimum distance 20cm between the radiator & your body.

The remote control has been evaluated to meet general RF exposure requirement. It can be used in portable exposure condition without restriction.

AEE.COM