Social Distance Watch User Manual

1. Introduction to Social Distance Watch 3

1.1 Introduction 3

1.2 Exterior 4

1.3 Product List 4

1.4 Specification 5

2. User Instructions 7

2.1 Product Components 7

2.2 Wearing Method 7

2.3 Charging Instructions 10

2.4 Interactive Instructions 11

3. FCC Statement 12

1. Introduction to Social Distance Watch

1.1 Introduction

System is a set of ranging system based on Ultra-Wideband Technology, which has the characteristics of high precision, large capacity, strong multi-path resistance and low power consumption.

Watches worn on the person consistently monitor the distance to the surrounding watches. When the distance is less than the safe value, an alarm signal will be generated immediately. The sound and light alarm reminds to prevent the person from being too close and reduce the risk of virus spreading.

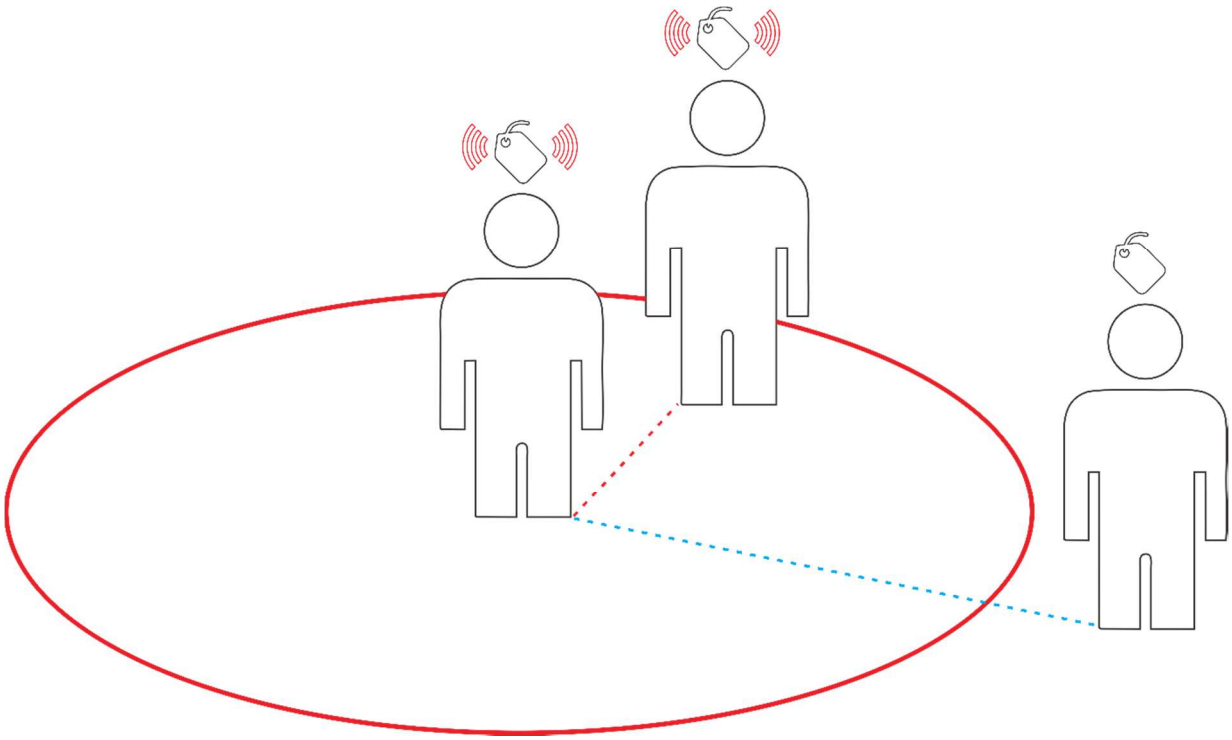

Figure 1-1 Schematic diagram of application

1.2 Exterior

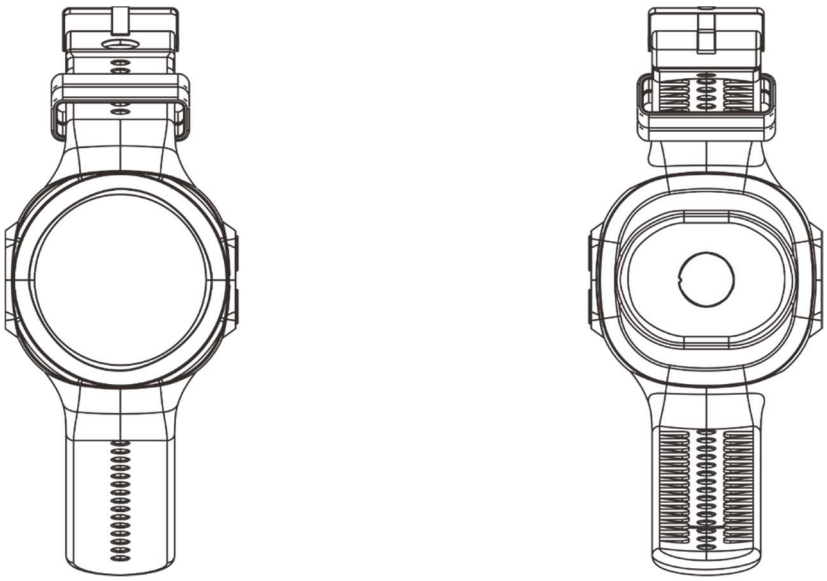

Figure 1-2 Front/Back views of Watch

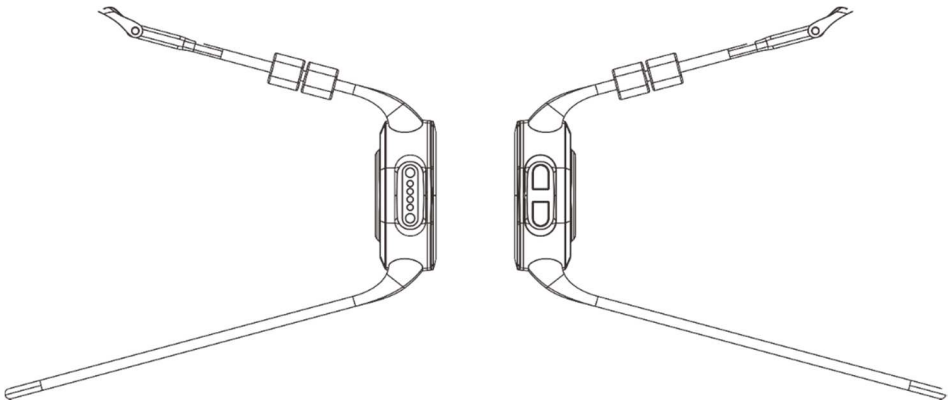

Figure 1-3 Left/Right views of Watch

1.3 Product List

The product list is shown in the figure1-4. From left to right, there are the watch, charger, charging cable.

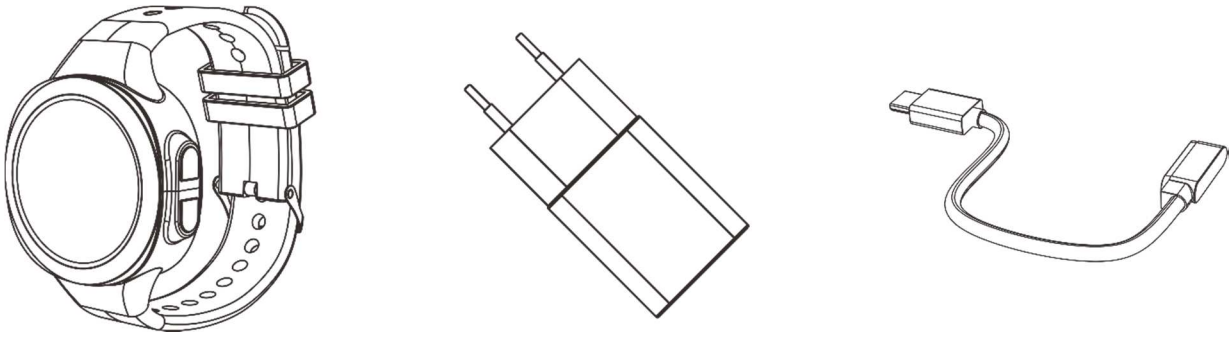

Figure1-4 Product list

1.4 Specification

Watch Specifications
Product type：EH100606A04-X
Dimensions：51×48×19.5mm
Weight：≤85g
Maximum battery life：≥10h
Charge/Power Interface：Pogo Pin-4
Charging time：≤2h
Low battery indicator：Yes
Key interaction：Yes

Vibration indicator：Yes

LED indicator：Yes

Working temperature: -20°C ~ 60°C

Storage temperature: -20°C ~ 85°C

Working humidity: 0~95% non-condensing

Protection level: IP67

Material：PC+ABS ，TPU

Battery type: lithium polymer battery

Battery level: 800mAh

Charging voltage/current：5V/430mA

Ranging wireless standard: 802.15.4_2011UWB

Ranging antenna gain：≤0.5dbi

Ranging method：TOF

Typical transmitting power of ranging: -41.3dbm/MHz

Acceleration sensor: 3 axis

2. User Instructions

2.1 Product Components

As shown in the figure below, the watch provides two buttons, indicator lights and charging interface.

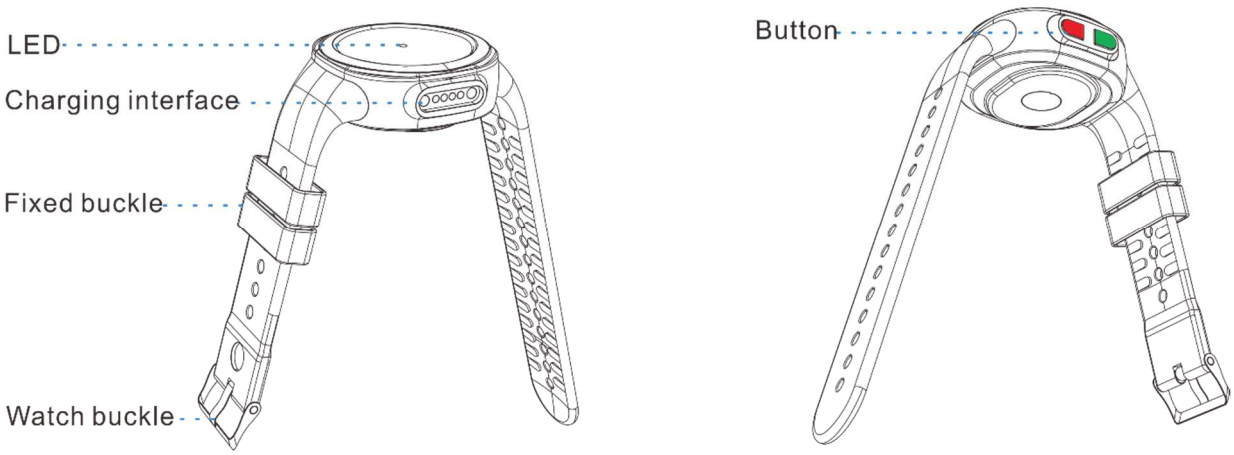

Figure 2-1 Product components

2.2 Wearing Method

2.2.1 Schematic Diagram of Wearing

Figure 2-2 Front view

Figure 2-3 Back view

2.2.2 Wearing Method

❶ Watchband through arm

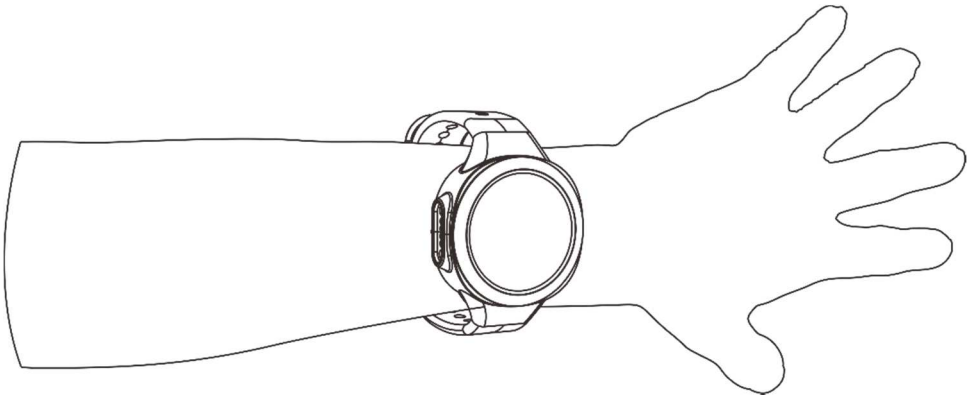

❷ Watchband passes through the metal buckle, then make the watchband adjusted to the proper position. And the buckle needle passes through the watchband hole

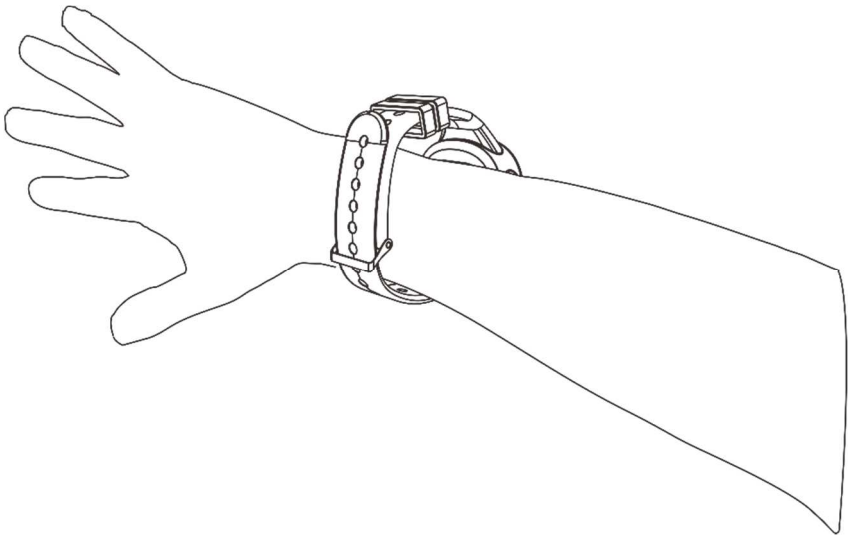

❸ After the buckle needle passes through the watchband, fasten the buckle with the fixing ring

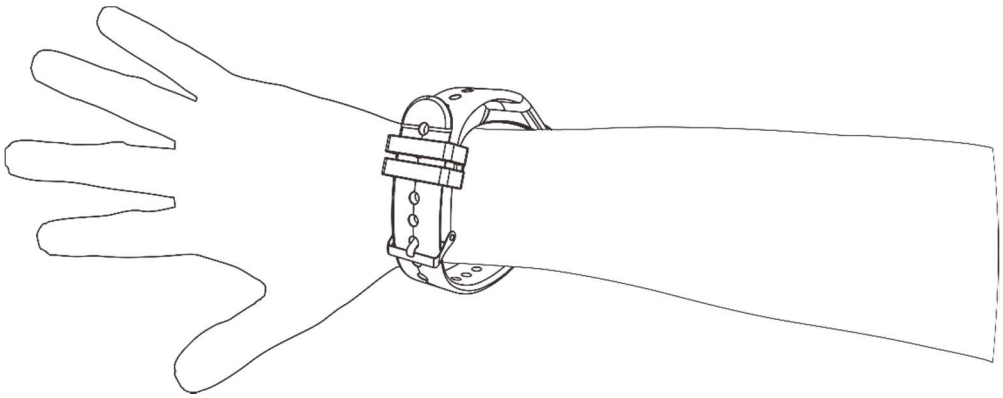

2.3 Charging Instructions

2.3.1 Charging with Charger

Use the charger and charging cable to complete the charging, as shown in the figure below.

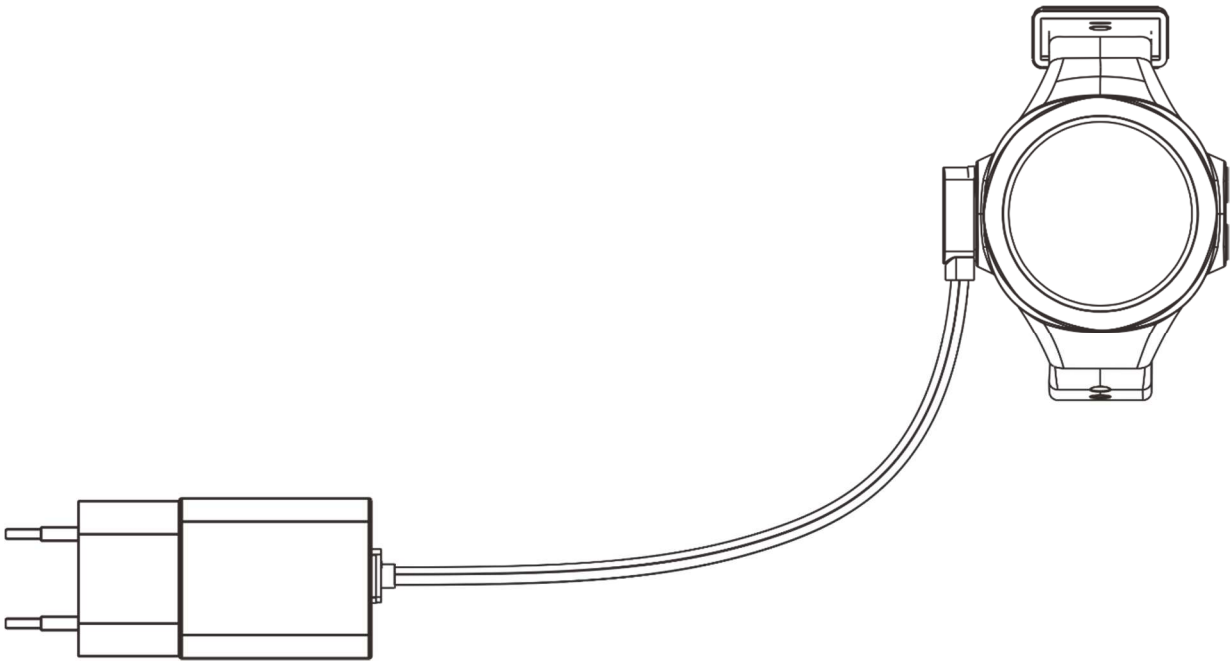

Figure2-4 Schematic diagram of charging

2.4 Interactive Instructions

2.4.1 Operating Instructions

- Power On: If product is in the power-off state, press and hold the right(red) button for more than 3 seconds. When you feel the vibration and see the LED flash, it means product is power-on successfully.
- Power Off: If product is in the power-on state, press and hold the right(red) button for more than 3 seconds. When you feel the vibration and see the LED flash, it means product is power-off successfully.
- Power Test: Press the left(green) button (less than 1s) and release. If the product still has power, the vibrator will work and the LED flash; If there is no power left, there will be no response.

2.4.2 Alarm Instructions

- Warning: When the distance between the watches is less than the safe distance, the watches will continue vibrating and the red LED will flash until the distance between t watches is greater than the safe distance.
- Working Status Indicator: When the watch is working normally, the LED flashes twice every 2s.
- Low Power Indicator: When the watch is in low power, the LED flashes twice every 5s.
- Charging: The LED flashes when the watch is charging, and the LED light is always on when it is fully charged.

3. FCC Statement

Warning: Changes or modifications to this unit not expressly approved by the party responsible for compliance could void the user's authority to operate the equipment.

FCC ID：2AWQO-EH100606A04-X

NOTE: This equipment has been tested and found to comply with the limits for a Class B digital device, pursuant to Part 15 of the FCC Rules. These limits are designed to provide reasonable protection against harmful interference in a residential installation. This equipment generates, uses and can radiate radio frequency energy and, if not installed and used in accordance with the instructions, may cause harmful interference to radio communications.

However, there is no guarantee that interference will not occur in a particular installation. If this equipment does cause harmful interference to radio or television reception, which can be determined by turning the equipment off and on, the user is encouraged to try to correct the interference by one or more of the

following measures:

- **Reorient or relocate the receiving antenna.**
- **Increase the separation between the equipment and receiver.**
- **Connect the equipment into an outlet on a circuit different from that to which the receiver is connected.**
- **Consult the dealer or an experienced radio/TV technician for help.**

The device has been evaluated to meet general RF exposure requirement. The device can be used in poor

table exposure condition without restriction.

The device must not be co-located or operating in conjunction with any other antenna or transmitter.

This device complies with Part 15 of the FCC Rules. Operation is subject to the following two conditions : (1) this device may not cause harmful interference, and (2) this device must accept any interference received, including interference that may cause undesired operation.

ForThink Technology Co., Ltd

Address：No. 898, Baicao Road, High-tech West Zone, Chengdu

Web：hg.ehighuwb.com

Telephone：400-028-9090