Social Distance Tag User Manual

1. Introduction to Social Distance Tag 3

1.1 Introduction 3
1.2 Exterior 4
1.3 Product List 4
1.4 Specification 4

2. User Instructions 6

2.1 Product Components 6
2.2 Wearing Method 6
2.3 Charging Instructions 7
2.4 User Manual 8

3. FCC Statement 8

1. Introduction to Social Distance Tag

1.1 Introduction

System is a set of ranging system based on Ultra-Wideband Technology, which has the characteristics of high precision, large capacity, strong multi-path resistance and low power consumption.

Tags worn on the person consistently monitor the distance to the surrounding tags. When the distance is less than the safe value, an alarm signal will be generated immediately. The sound and light alarm reminds to prevent the person from being too close and reduce the risk of virus spreading.

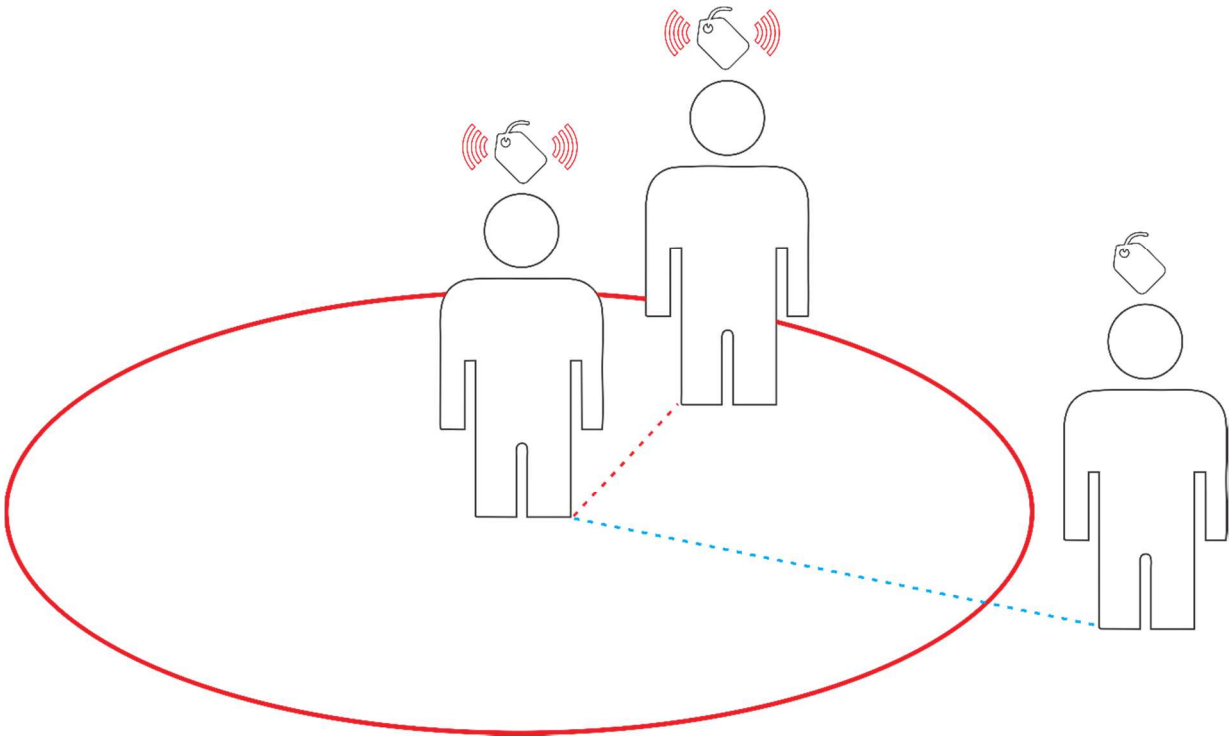

Figure 1-1 Schematic diagram of application

1.2 Exterior

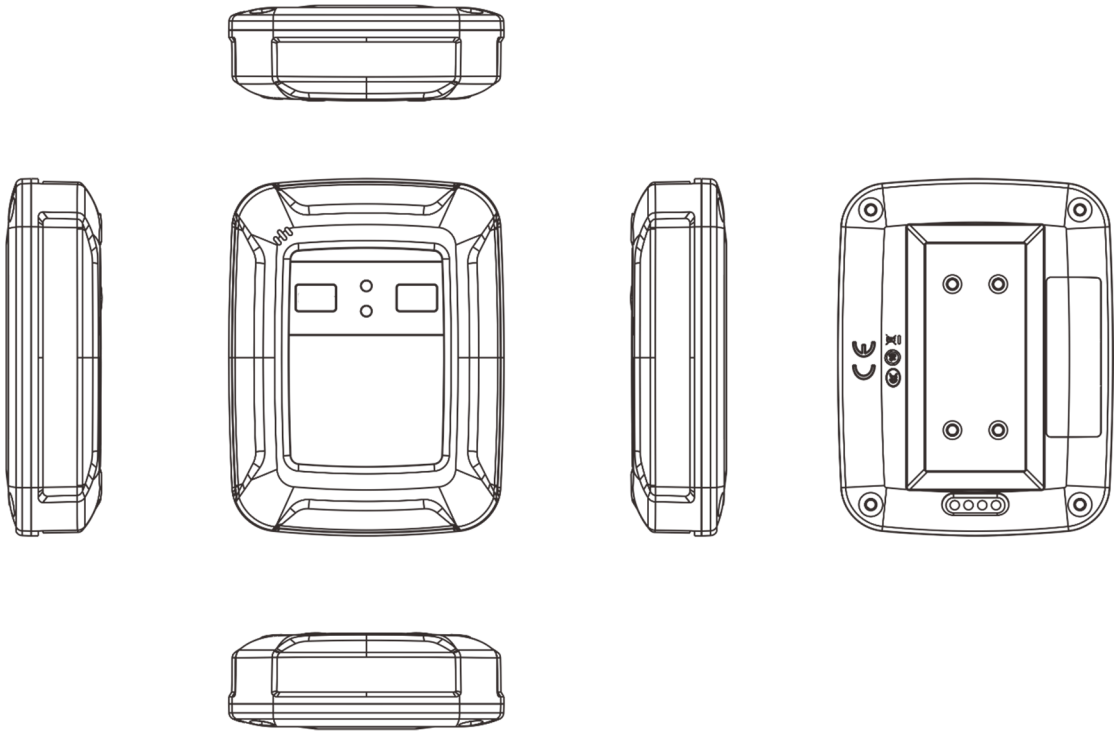

Figure 1-2 Six views of tag

1.3 Product List

The product list is shown in the figure1-3.From left to right, there are the tag, charging cradle, charging line, charging plug, and wearing accessories.

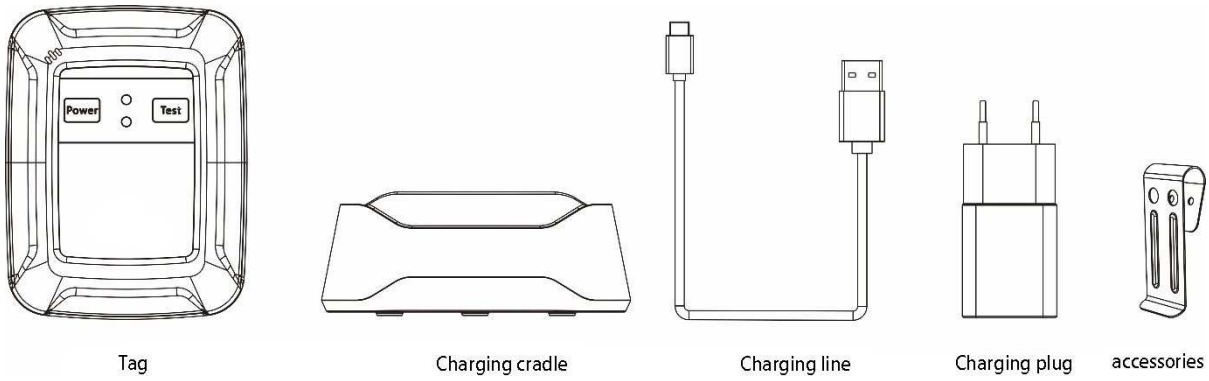

Figure1-3 Product list

1.4 Specification

Tag specifications

Product type：EH100606A05-P
Dimensions：78×60×21 mm
Weight：≤75g
Maximum battery life：≥10h
Charge/Power Interface：Pogo Pin-4
Charging time：≤3h
Low battery indicator：Yes
Key interaction：Yes
Voice indicator：Yes
Vibration indicator：Yes
LED indicator：Yes
Working temperature: -20 ° C ~ 60 ° C
Storage temperature: -20 ° C ~ 85 ° C
Working humidity: 0~95% non-condensing
Protection level: IP65
Material：ABS
Battery type: lithium polymer battery
Battery level: 1000mAh
Charging voltage/current：5V/430mA

Ranging wireless standard: 802.15.4_2011UWB

Ranging antenna gain：≤0.5dbi

Ranging method：TOF

Typical transmitting power of ranging：-41.3dbm/MHz

2. User Instructions

2.1 Product Components

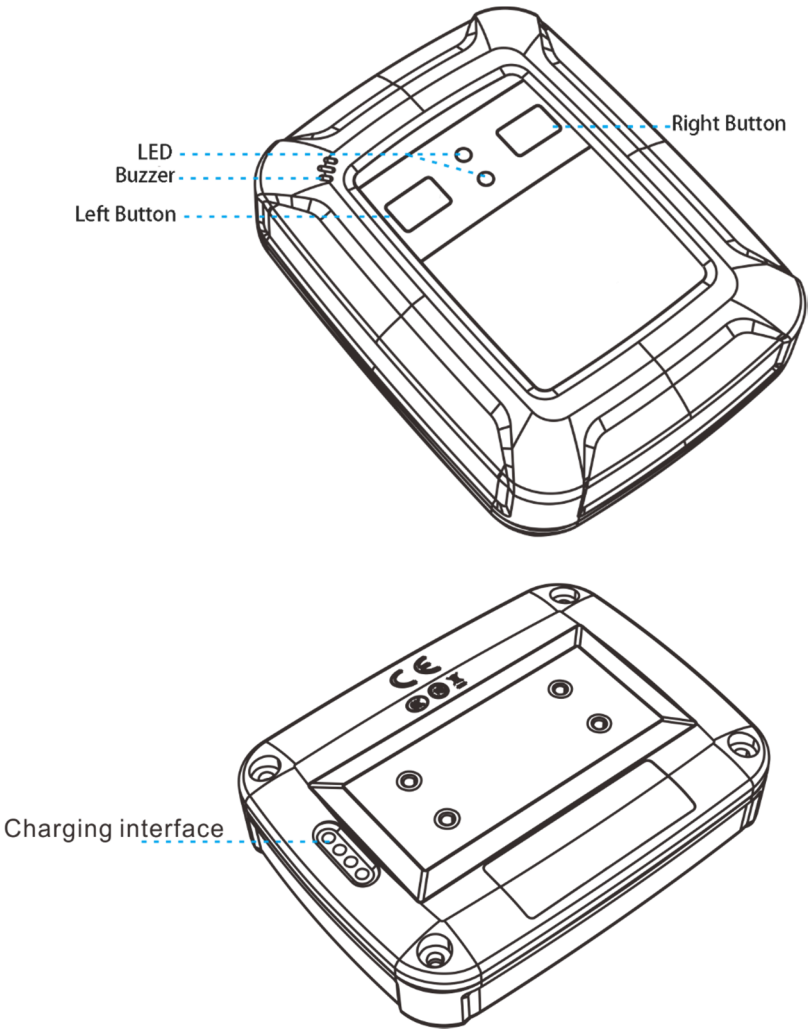

Figure2-1 Product components

2.2 Wearing Method

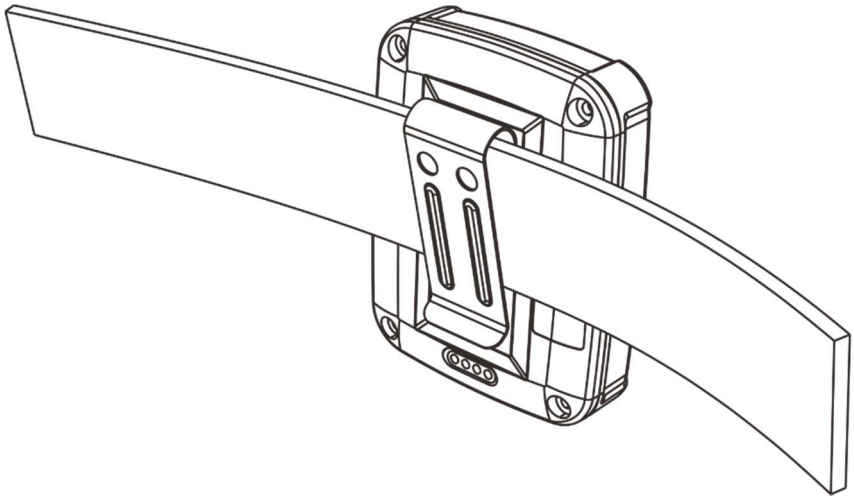

Figure2-2 Schematic diagram of wearing

2.3 Charging Instructions

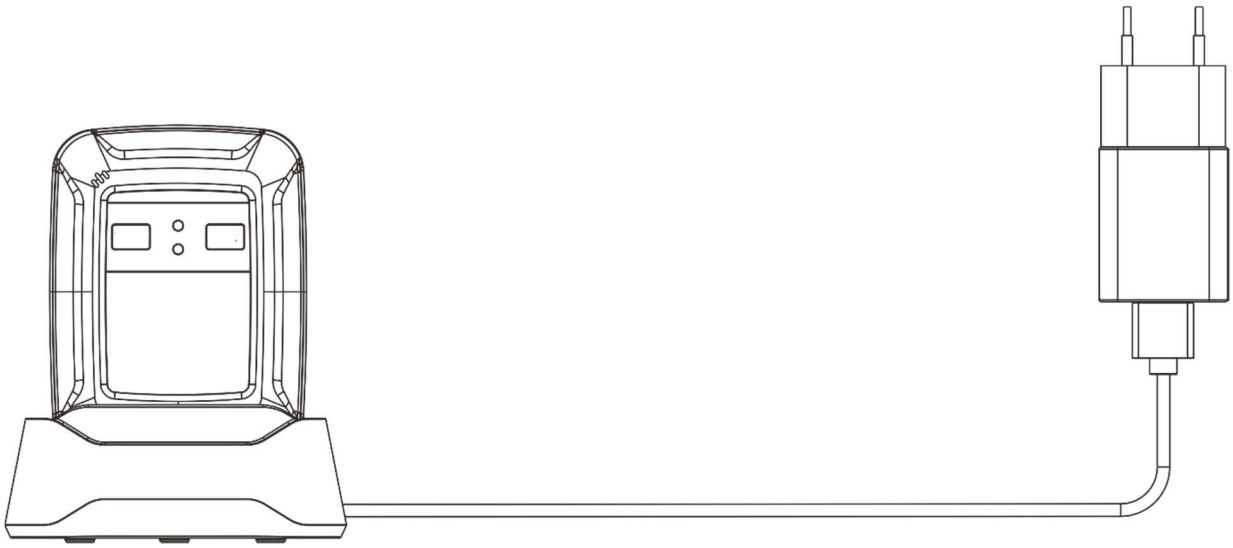

Figure2-3 Schematic diagram of charging

2.4 User Manual

2.4.1 Operating Instructions

- Power On: If product is in the power off state, press and hold the left button for more than 3 seconds. When you hear the buzzer and see the LED flash, it means product is power-on successfully.
- Power off: If product is in the power-on state, press and hold the left button for more than 3 seconds. When you hear the buzzer and see the LED flash, it means product is power-off successfully.
- Power Test: Press the right button (less than 1s) and release. If the product still has power, the buzzer will play a reminder sound and the LED flash; if there is no power left, there will be no response.

2.4.2 Alarm Instructions

- Warning: When the distance between the tags is less than the safe distance, the tags will continue vibrating and the LED will flash until the distance between tags is greater than the safe distance.
- Working status indicator: when the tag is working normally, the green LED flashes every 2s;
- Low Power Indicator: When the watch is in low power, the red LED flashes twice every 5s.
- Charging: The LED flashes when the label is charging, and the LED light is always on when it is fully charged.

3. FCC Statement

Warning: Changes or modifications to this unit not expressly approved by the party responsible for compliance could void the user's authority to operate the equipment.

FCC ID：2AWQO-EH100606A05-P

NOTE: This equipment has been tested and found to comply with the limits for a Class B digital device, pursuant to Part 15 of the FCC Rules. These limits are designed to provide reasonable protection against harmful interference in a residential installation. This equipment generates, uses and can radiate radio frequency energy and, if not installed and used in accordance with the instructions, may cause harmful interference to radio communications.

However, there is no guarantee that interference will not occur in a particular installation. If this equipment does cause harmful interference to radio or television reception, which can be determined by turning the equipment off and on, the user is encouraged to try to correct the interference by one or more of the

following measures:

- **Reorient or relocate the receiving antenna.**
- **Increase the separation between the equipment and receiver.**
- **Connect the equipment into an outlet on a circuit different from that to which the receiver is connected.**
- **Consult the dealer or an experienced radio/TV technician for help.**

The device has been evaluated to meet general RF exposure requirement. The device can be used in por

table exposure condition without restriction.

The device must not be co-located or operating in conjunction with any other

antenna or transmitter.

This device complies with Part 15 of the FCC Rules. Operation is subject to the following two conditions : (1) this device may not cause harmful interference, and (2) this device must accept any interference received, including interference that may cause undesired operation.

ForThink Technology Co., Ltd

Address：No. 898, Baicao Road, High-tech West Zone, Chengdu

Web：hg.ehighuwb.com

Telephone：400-028-9090