# ANTENNA PASSIVE TEST REPORT

| | |
|---|---|
| **Application No.** | SEWM2304000124OA |
| **Applicant** | Hyperice, Inc. |
| **Manufacturer** | Hyperice, Inc. |
| **Product Name** | Hypervolt 2 (Fascia gun) |
| **Model No** | HV2001 |
| **Standards** | IEEE Std 149 ™ -2021 |
| **Date Initial Sample(s) Received** | 2023.04.19 |
| **Testing Start Date** | 2023.04.20 |
| **Testing Finish Date** | 2023.04.20 |
| **Report Issue Date** | 2023.05.04 |

Comments/ Conclusion: The configuration tested complied to the certification requirements specified in this report.

| | | |
|---|---|---|
| Leno Shi | Caleb.Gao | Panta Sun |
| Leno Shi | Caleb Gao | Panta Sun |
| Prepared by | Reviewed by | Approved by |

The manufacturer should ensure that all products in series production are in conformity with the product sample detailed in this report.
If the product in this report is used in any configuration other than that detailed in the report, the manufacturer must ensure the new system complies with all relevant standards. Any mention of SGS International Electrical Approvals or testing done by SGS International Electrical Approvals in connection with, distribution or use of the product described in this report must be approved by SGS International Electrical Approvals in writing.
The report must not be used by the client to claim product certification, approval, or endorsement by NVLAP, NIST, or any agency of the federal government. All test results in this report can be traceable to National or International Standards.

Unless otherwise agreed in writing, this document is issued by the Company subject to its General Conditions of Service printed overleaf, available on request or accessible at http://www.sgs.com/en/Terms-and-Conditions.aspx and, for electronic format documents, subject to Terms and Conditions for Electronic Documents at http://www.sgs.com/en/Terms-and-Conditions/Terms-e-Document.aspx. Attention is drawn to the limitation of liability, indemnification and jurisdiction issues defined therein. Any holder of this document is advised that information contained hereon reflects the Company's findings at the time of its intervention only and within the limits of Client's instructions, if any. The Company's sole responsibility is to its Client and this document does not exonerate parties to a transaction from exercising all their rights and obligations under the transaction documents. This document cannot be reproduced except in full, without prior written approval of the Company. Any unauthorized alteration, forgery or falsification of the content or appearance of this document is unlawful and offenders may be prosecuted to the fullest extent of the law. Unless otherwise stated the results shown in this test report refer only to the sample(s) tested and such sample(s) are retained for 30 days only.
Attention: To check the authenticity of testing /inspection report & certificate, please contact us at telephone: (86-755) 8307 1443, or email: CN.Doccheck@sgs.com
South of No. 6 Plant, No. 1, Runsheng Road, Suzhou Industrial Park, Suzhou Area, China (Jiangsu) Pilot Free Trade Zone 215000 t (86–512) 62992980 www.sgsgroup.com.cn
中国 • 苏州 • 中国（江苏）自由贸易试验区苏州片区苏州工业园区润胜路1号的6号厂房南部 邮编: 215000 t (86–512) 62992980 sgs.china@sgs.com

# REVISION HISTORY

| Report No. | Version | Date | Memo |
|---|---|---|---|
| SEWM2304000124OA01 | 01 | 2023/05/04 | The final version of report |

Unless otherwise agreed in writing, this document is issued by the Company subject to its General Conditions of Service printed overleaf, available on request or accessible at http://www.sgs.com/en/Terms-and-Conditions.aspx and, for electronic format documents, subject to Terms and Conditions for Electronic Documents at http://www.sgs.com/en/Terms-and-Conditions/Terms-e-Document.aspx. Attention is drawn to the limitation of liability, indemnification and jurisdiction issues defined therein. Any holder of this document is advised that information contained hereon reflects the Company's findings at the time of its intervention only and within the limits of Client's instructions, if any. The Company's sole responsibility is to its Client and this document does not exonerate parties to a transaction from exercising all their rights and obligations under the transaction documents. This document cannot be reproduced except in full, without prior written approval of the Company. Any unauthorized alteration, forgery or falsification of the content or appearance of this document is unlawful and offenders may be prosecuted to the fullest extent of the law. Unless otherwise stated the results shown in this test report refer only to the sample(s) tested and such sample(s) are retained for 30 days only.
Attention: To check the authenticity of testing /inspection report & certificate, please contact us at telephone: (86-755) 8307 1443, or email: CN.Doccheck@sgs.com
South of No. 6 Plant, No. 1, Runsheng Road, Suzhou Industrial Park, Suzhou Area, China (Jiangsu) Pilot Free Trade Zone 215000 t (86–512) 62992980 www.sgsgroup.com.cn
中国 • 苏州 • 中国（江苏）自由贸易试验区苏州片区苏州工业园区润胜路1号的6号厂房南部 邮编: 215000 t (86–512) 62992980 sgs.china@sgs.com
Member of the SGS Group (SGS SA)

# TABLE OF CONTENTS

1. GENERAL INFORMATION ..... 4
1.1 DETAILS OF CLIENT ..... 4
1.2 TEST LOCATION ..... 4
1.3 GENERAL DESCRIPTION OF EUT ..... 5
1.4 TEST PROCEDURE ..... 5
1.5 LABORATORY ENVIRONMENT ..... 5
2. OTA MEASUREMENTS SYSTEM CONFIGURATION ..... 6
2.1 TEST CONFIGURATION ..... 6
2.2 TEST MEASUREMENT ..... 6
3. TEST EQUIPMENT LIST ..... 7
4. MEASUREMENT UNCERTAINTY ..... 8
5. TEST RESULTS ..... 9
5.1 ANTENNA ..... 9
6. 3-D ANTENNA PATTERN ..... 10
6.1 2400MHZ ..... 10
6.2 2450MHZ ..... 11
6.3 2500MHZ ..... 12
7. EUT AND TEST CONFIGURATION ..... 13

Unless otherwise agreed in writing, this document is issued by the Company subject to its General Conditions of Service printed overleaf, available on request or accessible at http://www.sgs.com/en/Terms-and-Conditions.aspx and, for electronic format documents, subject to Terms and Conditions for Electronic Documents at http://www.sgs.com/en/Terms-and-Conditions/Terms-e-Document.aspx. Attention is drawn to the limitation of liability, indemnification and jurisdiction issues defined therein. Any holder of this document is advised that information contained hereon reflects the Company's findings at the time of its intervention only and within the limits of Client's instructions, if any. The Company's sole responsibility is to its Client and this document does not exonerate parties to a transaction from exercising all their rights and obligations under the transaction documents. This document cannot be reproduced except in full, without prior written approval of the Company. Any unauthorized alteration, forgery or falsification of the content or appearance of this document is unlawful and offenders may be prosecuted to the fullest extent of the law. Unless otherwise stated the results shown in this test report refer only to the sample(s) tested and such sample(s) are retained for 30 days only.
Attention: To check the authenticity of testing /inspection report & certificate, please contact us at telephone: (86-755) 8307 1443, or email: CN.Doccheck@sgs.com
South of No. 6 Plant, No. 1, Runsheng Road, Suzhou Industrial Park, Suzhou Area, China (Jiangsu) Pilot Free Trade Zone 215000 t (86-512) 62992980 www.sgsgroup.com.cn
中国·苏州·中国（江苏）自由贸易试验区苏州片区苏州工业园区润胜路1号的6号厂房南部 邮编: 215000 t (86-512) 62992980 sgs.china@sgs.com

# 1. General Information

## 1.1 Details of Client

| | |
|---|---|
| Applicant | Hyperice, Inc. |
| Address: | 525 Technology Drive, Suite 100, Irvine, California, 92618 |
| Manufacturer | Hyperice, Inc. |
| Address: | 525 Technology Drive, Suite 100, Irvine, California, 92618 |

## 1.2 Test Location

| | |
|---|---|
| Company | SGS-CSTC Standards Technical Service（Suzhou）Co., Ltd. |
| Address | South of No. 6 Plant, No. 1, Runsheng Road, Suzhou Industrial Park, Suzhou Area, China (Jiangsu) Pilot Free Trade Zone |
| Post Code | 215000 |
| Telephone | +86(0)512-62990300 |
| Fax | +86(0)512-62990300 |

Unless otherwise agreed in writing, this document is issued by the Company subject to its General Conditions of Service printed overleaf, available on request or accessible at http://www.sgs.com/en/Terms-and-Conditions.aspx and, for electronic format documents, subject to Terms and Conditions for Electronic Documents at http://www.sgs.com/en/Terms-and-Conditions/Terms-e-Document.aspx. Attention is drawn to the limitation of liability, indemnification and jurisdiction issues defined therein. Any holder of this document is advised that information contained hereon reflects the Company's findings at the time of its intervention only and within the limits of Client's instructions, if any. The Company's sole responsibility is to its Client and this document does not exonerate parties to a transaction from exercising all their rights and obligations under the transaction documents. This document cannot be reproduced except in full, without prior written approval of the Company. Any unauthorized alteration, forgery or falsification of the content or appearance of this document is unlawful and offenders may be prosecuted to the fullest extent of the law. Unless otherwise stated the results shown in this test report refer only to the sample(s) tested and such sample(s) are retained for 30 days only.
Attention: To check the authenticity of testing /inspection report & certificate, please contact us at telephone: (86-755) 8307 1443, or email: CN.Doccheck@sgs.com
South of No. 6 Plant, No. 1, Runsheng Road, Suzhou Industrial Park, Suzhou Area, China (Jiangsu) Pilot Free Trade Zone 215000 t (86–512) 62992980 www.sgsgroup.com.cn
中国・苏州・中国（江苏）自由贸易试验区苏州片区苏州工业园区润胜路1号的6号厂房南部 邮编: 215000 t (86–512) 62992980 sgs.china@sgs.com
Member of the SGS Group (SGS SA)

## 1.3 General Description of EUT

| | |
|---|---|
| Device Description: | Hypervolt 2 (Fascia gun) |
| Device Manufacturer: | Hyperice, Inc. |
| Device Model: | HV2001 |
| Hardware Version: | Encoder_LITE_V2.4 |
| Software Version: | Relaxroll Test App v0.1.15 |

## 1.4 Test Procedure

Testing is performed according to the IEEE Std 149 ™ -2021

## 1.5 Laboratory Environment

| | | |
|---|---|---|
| Temperature | Min. =19℃，Max. = 25℃ | |
| Relative humidity | Min. =40%，Max. =72% | |
| Shield effect | 0.7-6GHz | > 100dB |
| Ground resistance | <0.5Ω | |

Unless otherwise agreed in writing, this document is issued by the Company subject to its General Conditions of Service printed overleaf, available on request or accessible at http://www.sgs.com/en/Terms-and-Conditions.aspx and, for electronic format documents, subject to Terms and Conditions for Electronic Documents at http://www.sgs.com/en/Terms-and-Conditions/Terms-e-Document.aspx. Attention is drawn to the limitation of liability, indemnification and jurisdiction issues defined therein. Any holder of this document is advised that information contained hereon reflects the Company's findings at the time of its intervention only and within the limits of Client's instructions, if any. The Company's sole responsibility is to its Client and this document does not exonerate parties to a transaction from exercising all their rights and obligations under the transaction documents. This document cannot be reproduced except in full, without prior written approval of the Company. Any unauthorized alteration, forgery or falsification of the content or appearance of this document is unlawful and offenders may be prosecuted to the fullest extent of the law. Unless otherwise stated the results shown in this test report refer only to the sample(s) tested and such sample(s) are retained for 30 days only.
Attention: To check the authenticity of testing /inspection report & certificate, please contact us at telephone: (86-755) 8307 1443, or email: CN.Doccheck@sgs.com
South of No. 6 Plant, No. 1, Runsheng Road, Suzhou Industrial Park, Suzhou Area, China (Jiangsu) Pilot Free Trade Zone 215000 t (86–512) 62992980 www.sgsgroup.com.cn
中国·苏州·中国（江苏）自由贸易试验区苏州片区苏州工业园区润胜路1号的6号厂房南部 邮编: 215000 t (86–512) 62992980 sgs.china@sgs.com
Member of the SGS Group (SGS SA)

# 2. OTA Measurements System Configuration

## 2.1 Test Configuration

Conical-Cut method is used to measure the antenna 3D GAIN of EUT in OTA qualified anechoic chamber. Equipment Under Test (EUT) geometry centre vertical projection at the centre of platform, the distance from EUT to measurement antenna is 1.5m

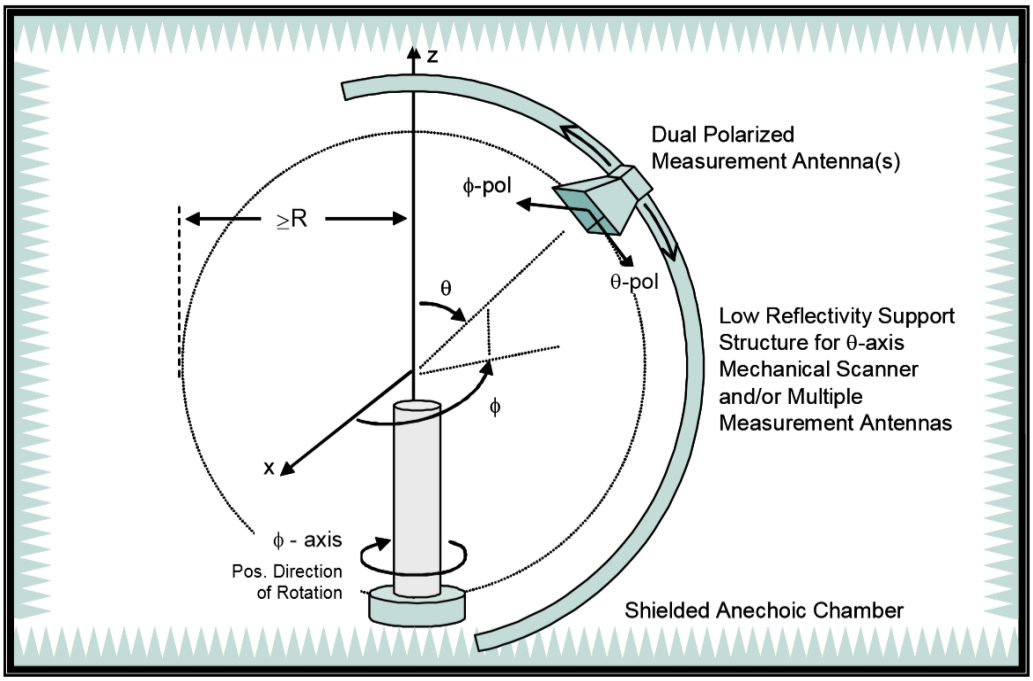


## 2.2 Test Measurement

**Spherical coordinate system**

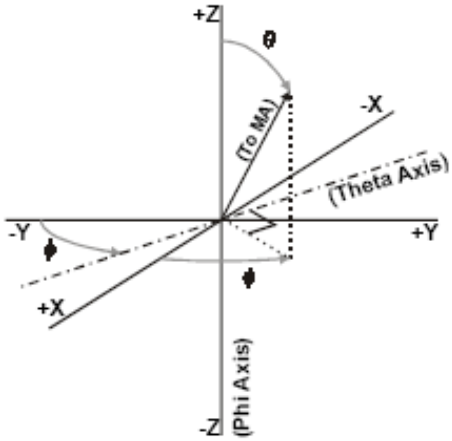


Unless otherwise agreed in writing, this document is issued by the Company subject to its General Conditions of Service printed overleaf, available on request or accessible at http://www.sgs.com/en/Terms-and-Conditions.aspx and, for electronic format documents, subject to Terms and Conditions for Electronic Documents at http://www.sgs.com/en/Terms-and-Conditions/Terms-e-Document.aspx. Attention is drawn to the limitation of liability, indemnification and jurisdiction issues defined therein. Any holder of this document is advised that information contained hereon reflects the Company's findings at the time of its intervention only and within the limits of Client's instructions, if any. The Company's sole responsibility is to its Client and this document does not exonerate parties to a transaction from exercising all their rights and obligations under the transaction documents. This document cannot be reproduced except in full, without prior written approval of the Company. Any unauthorized alteration, forgery or falsification of the content or appearance of this document is unlawful and offenders may be prosecuted to the fullest extent of the law. Unless otherwise stated the results shown in this test report refer only to the sample(s) tested and such sample(s) are retained for 30 days only.
Attention: To check the authenticity of testing /inspection report & certificate, please contact us at telephone: (86-755) 8307 1443, or email: CN.Doccheck@sgs.com
South of No. 6 Plant, No. 1, Runsheng Road, Suzhou Industrial Park, Suzhou Area, China (Jiangsu) Pilot Free Trade Zone 215000 t (86–512) 62992980 www.sgsgroup.com.cn
中国 • 苏州 • 中国（江苏）自由贸易试验区苏州片区苏州工业园区润胜路1号的6号厂房南部 邮编: 215000 t (86–512) 62992980 sgs.china@sgs.com
Member of the SGS Group (SGS SA)

# 3. Test Equipment List

| Type of Equipment | Model Number | Manufacture | Calibration Date | Valid Period |
|---|---|---|---|---|
| Network Analyzer | ZNB8<br>S/N 103535 | R&S | 2023-02-06 | 2024-02-05 |
| Switch Control System | OSP 130<br>S/N 100358 | R&S | N/A | N/A |
| MAPS Controller | 2090<br>S/N 114576 | ETS-Lindgren L.P. | N/A | N/A |
| Test Software | EMQuest™ REV 1.14<br>Build 31654 | ETS-Lindgren L.P | N/A | N/A |
| Full Anechoic Wireless Test chamber | ETS-Lindgren<br>AMS- 8923<br>CT000596-1149 | ETS-Lindgren L.P | N/A | N/A |

Unless otherwise agreed in writing, this document is issued by the Company subject to its General Conditions of Service printed overleaf, available on request or accessible at http://www.sgs.com/en/Terms-and-Conditions.aspx and, for electronic format documents, subject to Terms and Conditions for Electronic Documents at http://www.sgs.com/en/Terms-and-Conditions/Terms-e-Document.aspx. Attention is drawn to the limitation of liability, indemnification and jurisdiction issues defined therein. Any holder of this document is advised that information contained hereon reflects the Company's findings at the time of its intervention only and within the limits of Client's instructions, if any. The Company's sole responsibility is to its Client and this document does not exonerate parties to a transaction from exercising all their rights and obligations under the transaction documents. This document cannot be reproduced except in full, without prior written approval of the Company. Any unauthorized alteration, forgery or falsification of the content or appearance of this document is unlawful and offenders may be prosecuted to the fullest extent of the law. Unless otherwise stated the results shown in this test report refer only to the sample(s) tested and such sample(s) are retained for 30 days only.
Attention: To check the authenticity of testing /inspection report & certificate, please contact us at telephone: (86-755) 8307 1443, or email: CN.Doccheck@sgs.com
South of No. 6 Plant, No. 1, Runsheng Road, Suzhou Industrial Park, Suzhou Area, China (Jiangsu) Pilot Free Trade Zone 215000 t (86–512) 62992980 www.sgsgroup.com.cn
中国 • 苏州 • 中国（江苏）自由贸易试验区苏州片区苏州工业园区润胜路1号的6号厂房南部 邮编: 215000 t (86–512) 62992980 sgs.china@sgs.com
Member of the SGS Group (SGS SA)

# 4. Measurement Uncertainty

| Item | 617-698MHz (dB) | 699-798MHz (dB) | 814-894MHz (dB) | 1695-1780MHz (dB) | 1850-2020MHz (dB) | 2300-2800MHz (dB) | 3300-3800MHz (dB) | 5150-5925MHz (dB) |
|---|---|---|---|---|---|---|---|---|
| Gain | 0.75 | 0.9 | 0.74 | 0.84 | 0.83 | 0.9 | 0.84 | 0.86 |
| Efficiency | 0.75 | 0.9 | 0.74 | 0.84 | 0.83 | 0.9 | 0.84 | 0.86 |
| Measurement Uncertainty (95% CONFIDENCE INTERVAL) K=2 | | | | | | | | |

Unless otherwise agreed in writing, this document is issued by the Company subject to its General Conditions of Service printed overleaf, available on request or accessible at http://www.sgs.com/en/Terms-and-Conditions.aspx and, for electronic format documents, subject to Terms and Conditions for Electronic Documents at http://www.sgs.com/en/Terms-and-Conditions/Terms-e-Document.aspx. Attention is drawn to the limitation of liability, indemnification and jurisdiction issues defined therein. Any holder of this document is advised that information contained hereon reflects the Company's findings at the time of its intervention only and within the limits of Client's instructions, if any. The Company's sole responsibility is to its Client and this document does not exonerate parties to a transaction from exercising all their rights and obligations under the transaction documents. This document cannot be reproduced except in full, without prior written approval of the Company. Any unauthorized alteration, forgery or falsification of the content or appearance of this document is unlawful and offenders may be prosecuted to the fullest extent of the law. Unless otherwise stated the results shown in this test report refer only to the sample(s) tested and such sample(s) are retained for 30 days only.
Attention: To check the authenticity of testing /inspection report & certificate, please contact us at telephone: (86-755) 8307 1443, or email: CN.Doccheck@sgs.com
South of No. 6 Plant, No. 1, Runsheng Road, Suzhou Industrial Park, Suzhou Area, China (Jiangsu) Pilot Free Trade Zone 215000 t (86–512) 62992980 www.sgsgroup.com.cn
中国 • 苏州 • 中国（江苏）自由贸易试验区苏州片区苏州工业园区润胜路1号的6号厂房南部 邮编: 215000 t (86–512) 62992980 sgs.china@sgs.com

# 5. Test Results

## 5.1 Antenna

| Frequency(MHz) | Gain(dBi) | Efficiency(dB) | Efficiency(%) |
|---|---|---|---|
| 2400 | -10.18 | -14.27 | 3.74 |
| 2410 | -10.15 | -14.09 | 3.90 |
| 2420 | -10.50 | -14.34 | 3.68 |
| 2430 | -10.30 | -14.35 | 3.68 |
| 2440 | -9.96 | -14.35 | 3.67 |
| 2450 | -10.33 | -14.73 | 3.36 |
| 2460 | -10.27 | -14.46 | 3.58 |
| 2470 | -10.27 | -14.49 | 3.56 |
| 2480 | -10.36 | -14.59 | 3.47 |
| 2490 | -10.16 | -14.57 | 3.49 |
| 2500 | -10.18 | -14.61 | 3.46 |

Unless otherwise agreed in writing, this document is issued by the Company subject to its General Conditions of Service printed overleaf, available on request or accessible at http://www.sgs.com/en/Terms-and-Conditions.aspx and, for electronic format documents, subject to Terms and Conditions for Electronic Documents at http://www.sgs.com/en/Terms-and-Conditions/Terms-e-Document.aspx. Attention is drawn to the limitation of liability, indemnification and jurisdiction issues defined therein. Any holder of this document is advised that information contained hereon reflects the Company's findings at the time of its intervention only and within the limits of Client's instructions, if any. The Company's sole responsibility is to its Client and this document does not exonerate parties to a transaction from exercising all their rights and obligations under the transaction documents. This document cannot be reproduced except in full, without prior written approval of the Company. Any unauthorized alteration, forgery or falsification of the content or appearance of this document is unlawful and offenders may be prosecuted to the fullest extent of the law. Unless otherwise stated the results shown in this test report refer only to the sample(s) tested and such sample(s) are retained for 30 days only.
Attention: To check the authenticity of testing /inspection report & certificate, please contact us at telephone: (86-755) 8307 1443, or email: CN.Doccheck@sgs.com
South of No. 6 Plant, No. 1, Runsheng Road, Suzhou Industrial Park, Suzhou Area, China (Jiangsu) Pilot Free Trade Zone 215000 t (86–512) 62992980 www.sgsgroup.com.cn
中国·苏州·中国（江苏）自由贸易试验区苏州片区苏州工业园区润胜路1号的6号厂房南部 邮编: 215000 t (86–512) 62992980 sgs.china@sgs.com
Member of the SGS Group (SGS SA)

# 6. 3-D Antenna Pattern

## 6.1 2400MHz

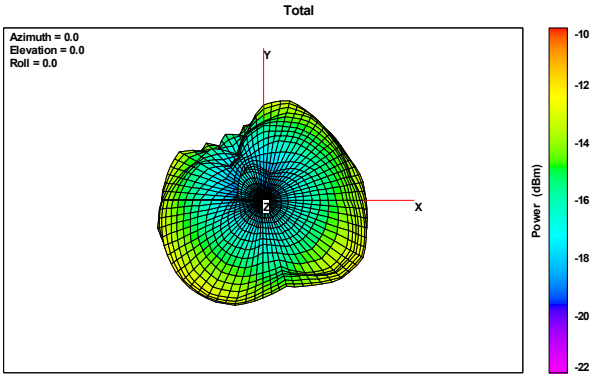


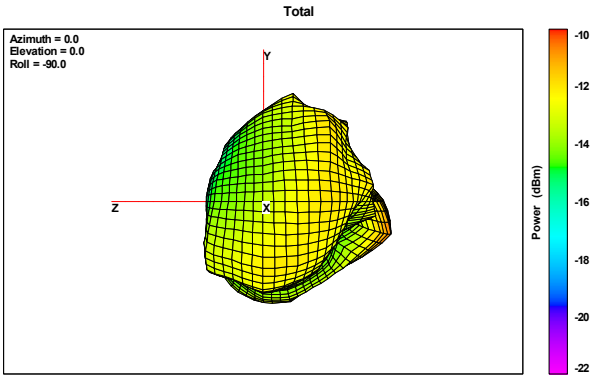


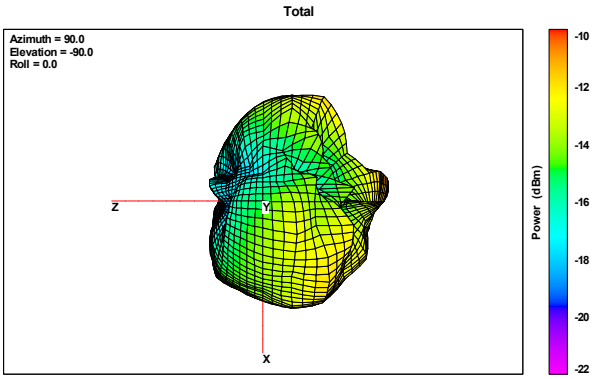


Unless otherwise agreed in writing, this document is issued by the Company subject to its General Conditions of Service printed overleaf, available on request or accessible at http://www.sgs.com/en/Terms-and-Conditions.aspx and, for electronic format documents, subject to Terms and Conditions for Electronic Documents at http://www.sgs.com/en/Terms-and-Conditions/Terms-e-Document.aspx. Attention is drawn to the limitation of liability, indemnification and jurisdiction issues defined therein. Any holder of this document is advised that information contained hereon reflects the Company's findings at the time of its intervention only and within the limits of Client's instructions, if any. The Company's sole responsibility is to its Client and this document does not exonerate parties to a transaction from exercising all their rights and obligations under the transaction documents. This document cannot be reproduced except in full, without prior written approval of the Company. Any unauthorized alteration, forgery or falsification of the content or appearance of this document is unlawful and offenders may be prosecuted to the fullest extent of the law. Unless otherwise stated the results shown in this test report refer only to the sample(s) tested and such sample(s) are retained for 30 days only.
Attention: To check the authenticity of testing /inspection report & certificate, please contact us at telephone: (86-755) 8307 1443, or email: CN.Doccheck@sgs.com
South of No. 6 Plant, No. 1, Runsheng Road, Suzhou Industrial Park, Suzhou Area, China (Jiangsu) Pilot Free Trade Zone 215000 t (86–512) 62992980 www.sgsgroup.com.cn
中国 • 苏州 • 中国（江苏）自由贸易试验区苏州片区苏州工业园区润胜路1号的6号厂房南部 邮编: 215000 t (86–512) 62992980 sgs.china@sgs.com
Member of the SGS Group (SGS SA)

## 6.2 2450MHz

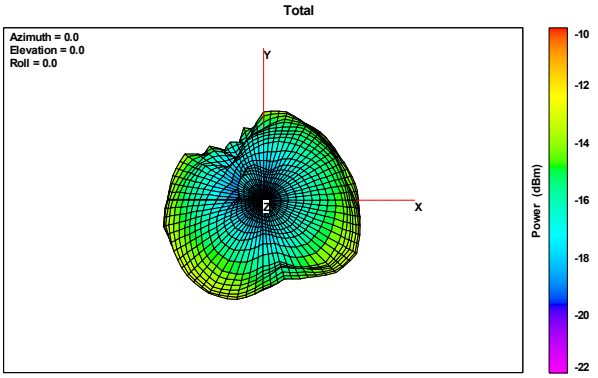


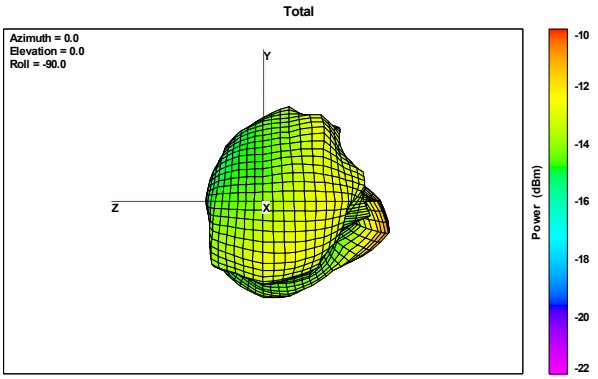


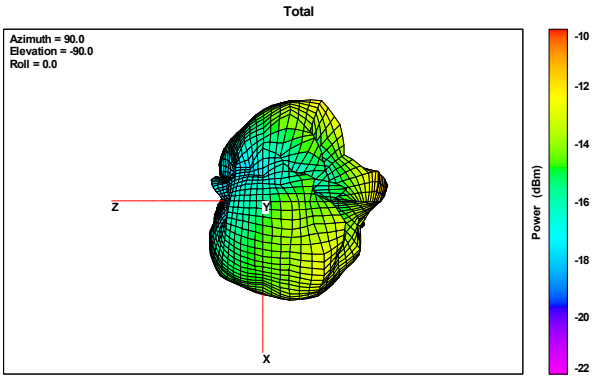


Unless otherwise agreed in writing, this document is issued by the Company subject to its General Conditions of Service printed overleaf, available on request or accessible at http://www.sgs.com/en/Terms-and-Conditions.aspx and, for electronic format documents, subject to Terms and Conditions for Electronic Documents at http://www.sgs.com/en/Terms-and-Conditions/Terms-e-Document.aspx. Attention is drawn to the limitation of liability, indemnification and jurisdiction issues defined therein. Any holder of this document is advised that information contained hereon reflects the Company's findings at the time of its intervention only and within the limits of Client's instructions, if any. The Company's sole responsibility is to its Client and this document does not exonerate parties to a transaction from exercising all their rights and obligations under the transaction documents. This document cannot be reproduced except in full, without prior written approval of the Company. Any unauthorized alteration, forgery or falsification of the content or appearance of this document is unlawful and offenders may be prosecuted to the fullest extent of the law. Unless otherwise stated the results shown in this test report refer only to the sample(s) tested and such sample(s) are retained for 30 days only.
Attention: To check the authenticity of testing /inspection report & certificate, please contact us at telephone: (86-755) 8307 1443, or email: CN.Doccheck@sgs.com
South of No. 6 Plant, No. 1, Runsheng Road, Suzhou Industrial Park, Suzhou Area, China (Jiangsu) Pilot Free Trade Zone 215000 t (86–512) 62992980 www.sgsgroup.com.cn
中国 • 苏州 • 中国（江苏）自由贸易试验区苏州片区苏州工业园区润胜路1号的6号厂房南部 邮编: 215000 t (86–512) 62992980 sgs.china@sgs.com
Member of the SGS Group (SGS SA)

## 6.3 2500MHz

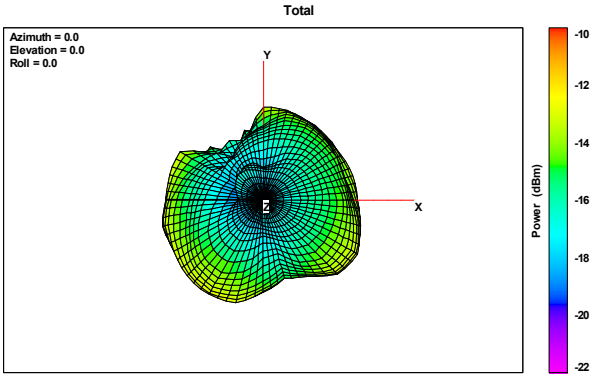


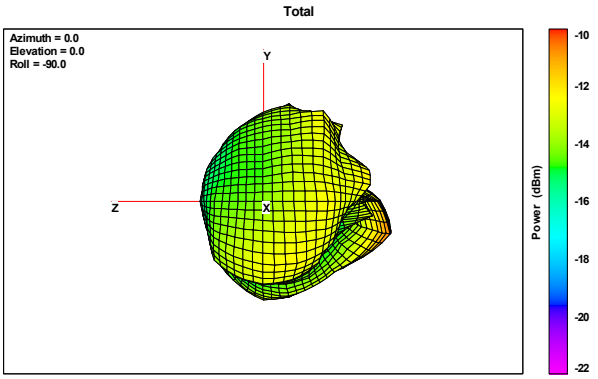


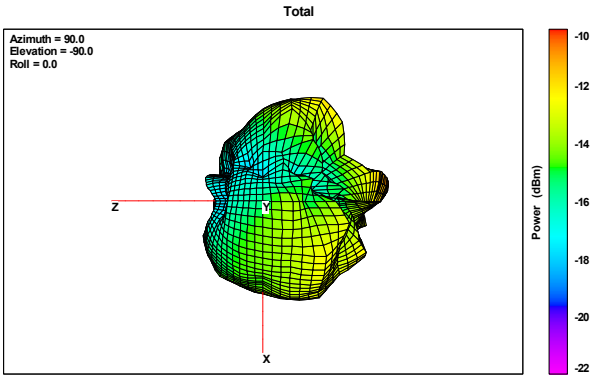


Unless otherwise agreed in writing, this document is issued by the Company subject to its General Conditions of Service printed overleaf, available on request or accessible at http://www.sgs.com/en/Terms-and-Conditions.aspx and, for electronic format documents, subject to Terms and Conditions for Electronic Documents at http://www.sgs.com/en/Terms-and-Conditions/Terms-e-Document.aspx. Attention is drawn to the limitation of liability, indemnification and jurisdiction issues defined therein. Any holder of this document is advised that information contained hereon reflects the Company's findings at the time of its intervention only and within the limits of Client's instructions, if any. The Company's sole responsibility is to its Client and this document does not exonerate parties to a transaction from exercising all their rights and obligations under the transaction documents. This document cannot be reproduced except in full, without prior written approval of the Company. Any unauthorized alteration, forgery or falsification of the content or appearance of this document is unlawful and offenders may be prosecuted to the fullest extent of the law. Unless otherwise stated the results shown in this test report refer only to the sample(s) tested and such sample(s) are retained for 30 days only.
Attention: To check the authenticity of testing /inspection report & certificate, please contact us at telephone: (86-755) 8307 1443, or email: CN.Doccheck@sgs.com
South of No. 6 Plant, No. 1, Runsheng Road, Suzhou Industrial Park, Suzhou Area, China (Jiangsu) Pilot Free Trade Zone 215000 t (86–512) 62992980 www.sgsgroup.com.cn
中国 • 苏州 • 中国（江苏）自由贸易试验区苏州片区苏州工业园区润胜路1号的6号厂房南部 邮编: 215000 t (86–512) 62992980 sgs.china@sgs.com
Member of the SGS Group (SGS SA)

## 7. EUT and Test Configuration

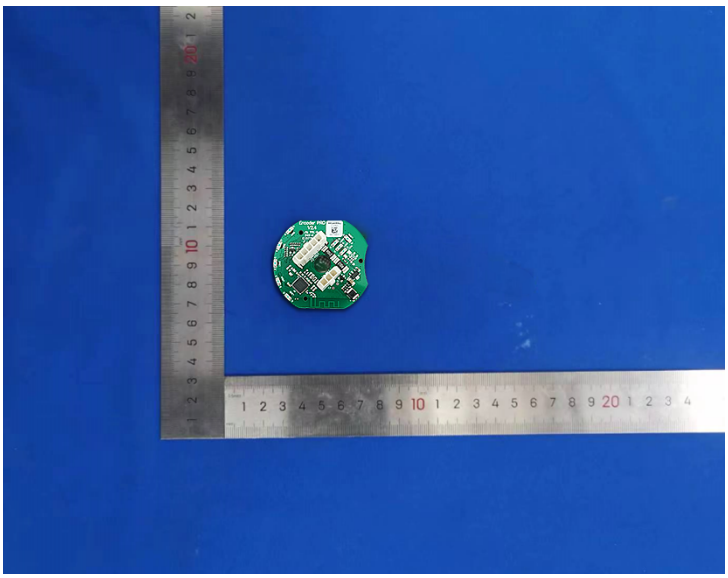

Photo of EUT

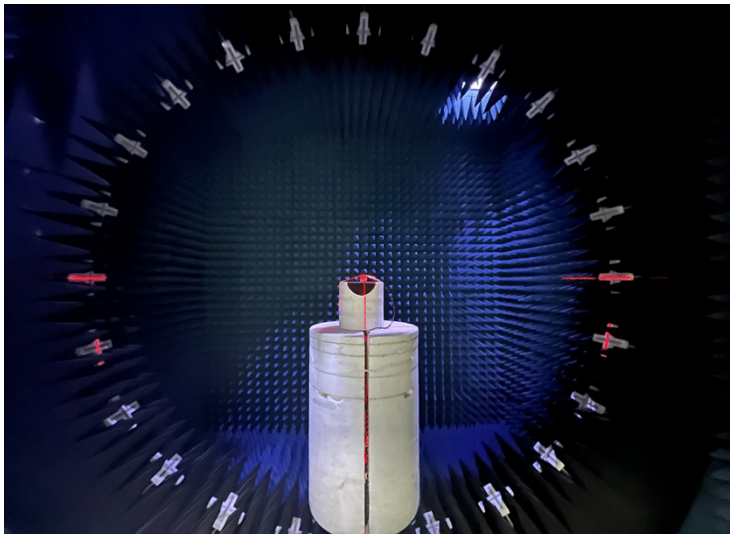

Free Space View of EUT

END REPORT

---

Unless otherwise agreed in writing, this document is issued by the Company subject to its General Conditions of Service printed overleaf, available on request or accessible at http://www.sgs.com/en/Terms-and-Conditions.aspx and, for electronic format documents, subject to Terms and Conditions for Electronic Documents at http://www.sgs.com/en/Terms-and-Conditions/Terms-e-Document.aspx. Attention is drawn to the limitation of liability, indemnification and jurisdiction issues defined therein. Any holder of this document is advised that information contained hereon reflects the Company's findings at the time of its intervention only and within the limits of Client's instructions, if any. The Company's sole responsibility is to its Client and this document does not exonerate parties to a transaction from exercising all their rights and obligations under the transaction documents. This document cannot be reproduced except in full, without prior written approval of the Company. Any unauthorized alteration, forgery or falsification of the content or appearance of this document is unlawful and offenders may be prosecuted to the fullest extent of the law. Unless otherwise stated the results shown in this test report refer only to the sample(s) tested and such sample(s) are retained for 30 days only.
Attention: To check the authenticity of testing /inspection report & certificate, please contact us at telephone: (86-755) 8307 1443, or email: CN.Doccheck@sgs.com
South of No. 6 Plant, No. 1, Runsheng Road, Suzhou Industrial Park, Suzhou Area, China (Jiangsu) Pilot Free Trade Zone 215000 t (86–512) 62992980 www.sgsgroup.com.cn
中国・苏州・中国（江苏）自由贸易试验区苏州片区苏州工业园区润胜路1号的6号厂房南部 邮编: 215000 t (86–512) 62992980 sgs.china@sgs.com
Member of the SGS Group (SGS SA)