SmartphoneGrip

BSP3200

Robert Bosch GmbH
72757 Reutlingen
Germany

www.bosch-ebike.com

0 275 008 3SG (2nd draft) T / 13

en Original operating instructions
zh 原廠操作說明書

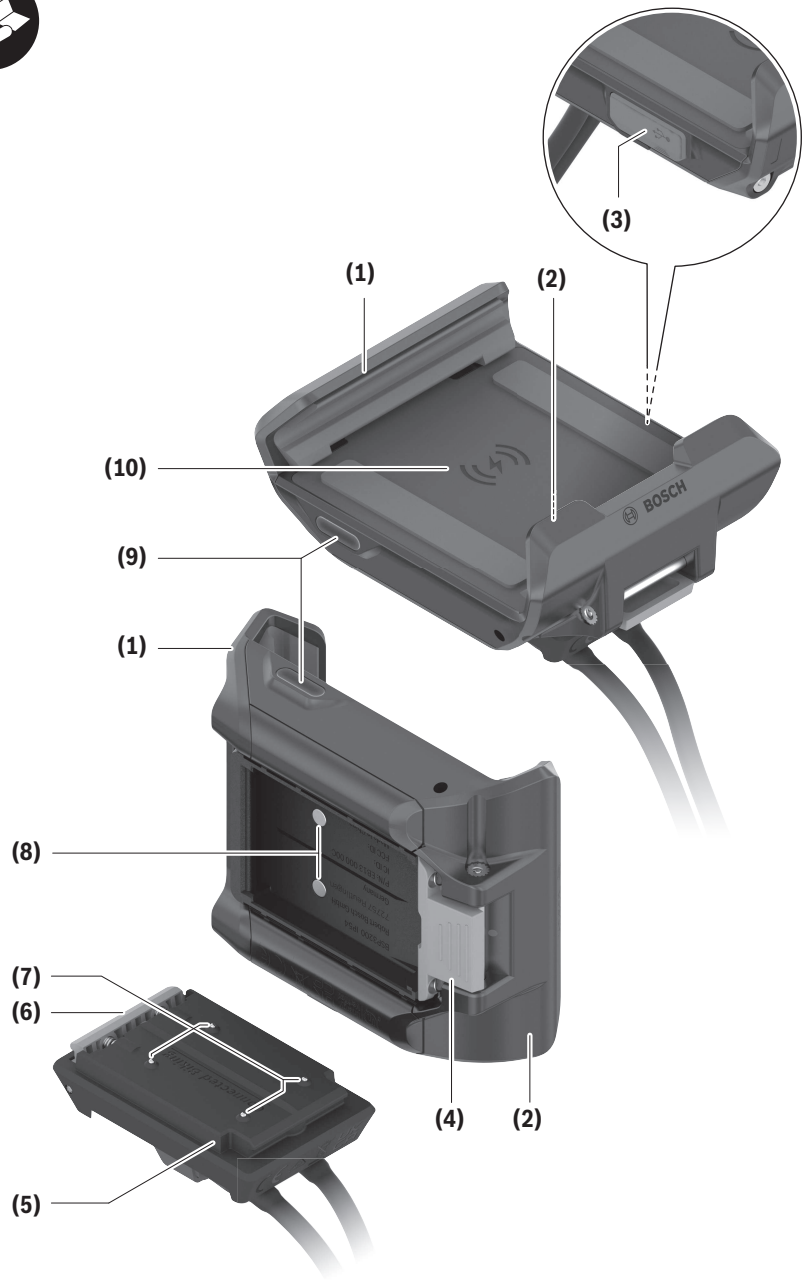
(3)
(1)
(2)
(10)
(9)
(1)
(8)
(7)
(6)
(4)
(2)
(5)
BOSCH

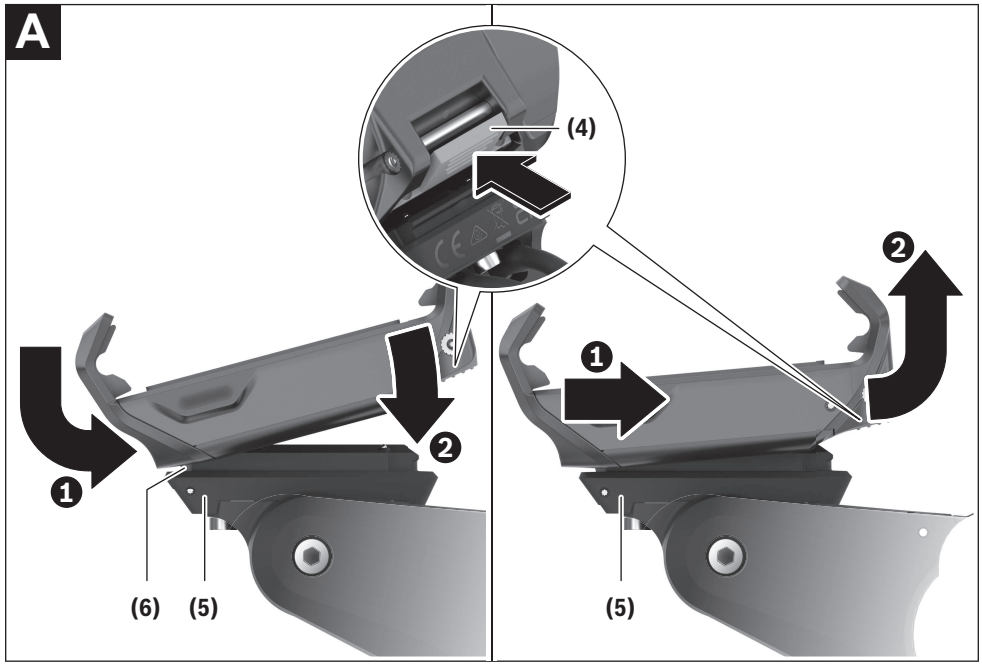
A
(4)
1
2
(6)
(5)
1
2
(5)

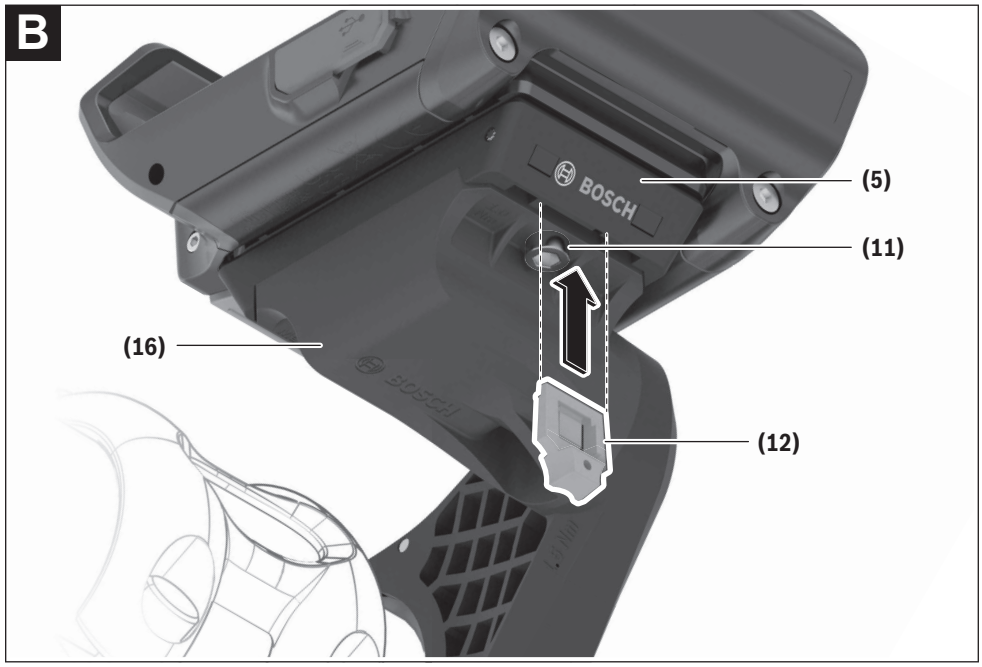
B
BOSCH
(5)
(11)
(16)
(12)

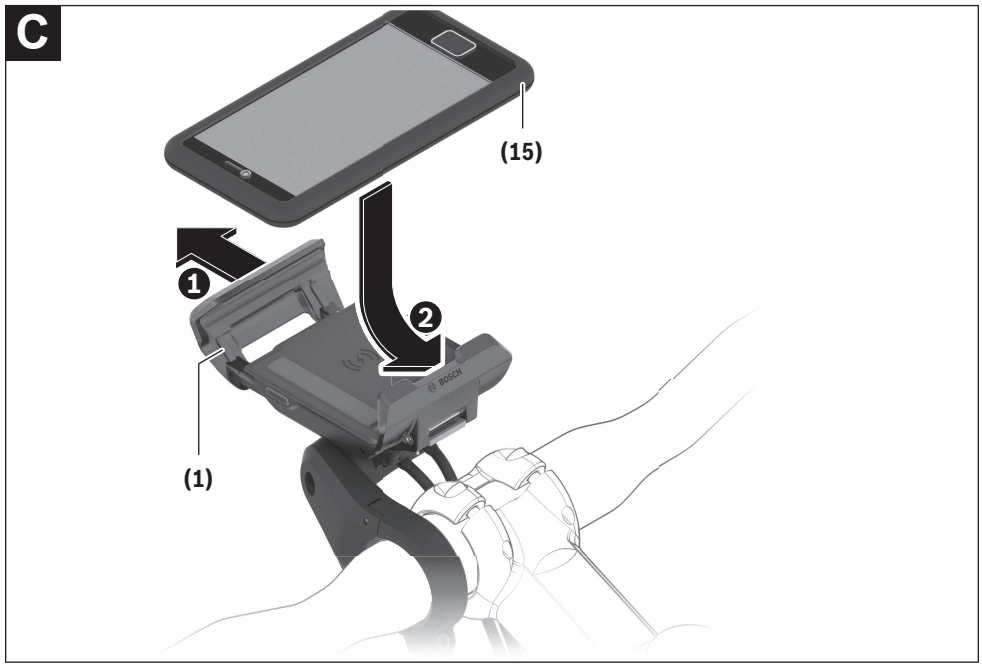
C
(15)
1
2
(1)

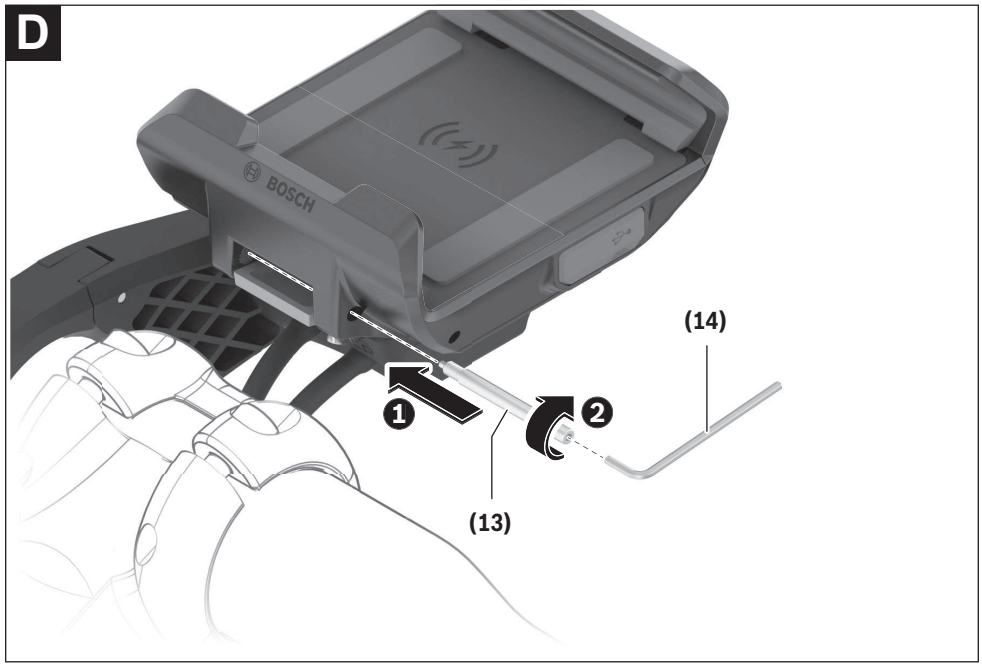
D
BOSCH
(14)
1
2
(13)

Safety Instructions

Read all the safety information and instructions. Failure to observe the safety information and follow instructions may result in electric shock, fire and/or serious injury.

Save all safety warnings and instructions for future reference.

- ▶ **Read and observe the safety warnings and directions contained in all the eBike system operating instructions and in the operating instructions of your eBike.**
- ▶ **Do not allow your attention to be diverted from surrounding traffic when using Bosch eBike components and always ride with both hands on the handlebars. Always observe the applicable legal provisions in your country for the permitted use of your bicycle in road traffic. In particular, note that it is prohibited to pick up or hold your smartphone in your hand in road traffic.**
- ▶ **Set the display brightness so that you can adequately see important information such as speed and warning symbols.** Incorrectly set display brightness may lead to dangerous situations.
- ▶ **The contact surfaces of the display holder may become very hot (> 60 °C). Allow the contact surfaces to adjust to the ambient temperature before you touch them.** This is particularly important when using a SmartphoneGrip.
- ▶ **Consult a doctor before using fitness app programs.** Fitness apps may cause people to overexert themselves physically.
- ▶ **Always observe local restrictions for using electronic devices.**
- ▶ **Avoid operation near your body for extended periods.**
- ▶ **Do not stand your bicycle upside down on its saddle and handlebars if the SmartphoneGrip or its holder protrude from the handlebars.** This may irreparably damage the SmartphoneGrip or the holder.
- ▶ **Do not use the SmartphoneGrip as a handle.** Lifting the eBike up by the SmartphoneGrip can cause irreparable damage to the SmartphoneGrip.
- ▶ **Do not open the SmartphoneGrip.** Opening the SmartphoneGrip may damage it beyond repair and void any warranty claims.
- ▶ **Caution!** When using the SmartphoneGrip with *Bluetooth*® and/or Wi-Fi, interference can occur with other devices and equipment, aircraft and medical devices (e.g. pacemakers, hearing aids). Likewise, injury to people and animals in the immediate vicinity cannot be excluded entirely. Do not use the SmartphoneGrip with *Bluetooth*® in the vicinity of medical devices, petrol stations, chemical plants, areas with a potentially explosive atmosphere or on blast sites. Do not use the SmartphoneGrip with *Bluetooth*® in aeroplanes. Avoid operation near your body for extended periods.

NOTICE: This device complies with part 15 of the FCC Rules. Operation is subject to the following two conditions:
1. This device must not cause harmful interference, and
2. this device must accept any interference received, including interference that may cause undesired operation.

NOTICE: Changes or modifications made to this equipment not expressly approved by the Robert Bosch GmbH may void the FCC authorization to operate this equipment.

NOTE: This equipment has been tested and found to comply with the limits for a Class B digital device, pursuant to Part 15 of the FCC Rules. These limits are designed to provide reasonable protection against harmful interference in a residential installation. This equipment generates, uses and can radiate radio frequency energy and, if not installed and used in accordance with the instructions, may cause harmful interference to radio communications. However, there is no guarantee that interference will not occur in a particular installation. If this equipment does cause harmful interference to radio or television reception, which can be determined by turning the equipment off and on, the user is encouraged to try to correct the interference by one or more of the following measures:
- Reorient or relocate the receiving antenna.
- Increase the separation between the equipment and receiver.
- Connect the equipment into an outlet on a circuit different from that to which the receiver is connected.
- Consult the dealer or an experienced radio/TV technician for help.

Radiofrequency radiation exposure Information: The radiated output power of the device is far below the FCC radio frequency exposure limits. Nevertheless, the device shall be used in such a manner that the potential for human contact during normal operation is minimized.

This equipment complies with FCC radiation exposure limits set forth for an uncontrolled environment. This equipment should be installed and operated with minimum distance of 20 cm between the radiator and your body. This transmitter must not be co-located or operating in conjunction with any other antenna or transmitter.

ISED Notice (Canada)

This device contains licence-exempt transmitter(s)/receiver(s) that comply with Innovation, Science and Economic Development Canada's licence-exempt RSS(s). Operation is subject to the following two conditions:
1. this device may not cause interference, and
2. this device must accept any interference, including interference that may cause undesired operation of the device.

This equipment complies with Canada radiation exposure limits set forth for an uncontrolled environment. This equipment should be installed and operated with minimum distance of 20 cm between the radiator and your body. This transmitter must not be co-located or operating in conjunction with any other antenna or transmitter.

Remarques ISDE (Canada)

Cet appareil contient un/des émetteur(s)/récepteur(s) exempt(s) de licence conforme(s) aux CNR d'Innovation, Sciences et Développement économique Canada applicables aux équipements exempts de licence. L'utilisation est autorisée sous réserve des deux conditions suivantes :
1. l'appareil ne doit pas produire de brouillage, et
2. l'appareil doit accepter tout brouillage radioélectrique subi, même si le brouillage est susceptible d'en compromettre le fonctionnement.

Cet équipement respecte les limites d'exposition aux rayonnements définies par le Canada pour un environnement non contrôlé. Cet équipement doit être installé et utilisé en maintenant une distance minimale de 20 cm entre la source de rayonnement et votre corps. Cet émetteur ne doit pas être placé à proximité d'une autre antenne ou d'un autre émetteur ou être utilisé en combinaison avec n'importe quelle autre antenne ou émetteur.

Product Description and Specifications

Intended Use

The Bosch SmartphoneGrip is designed to hold and charge a smartphone on the handlebars of a Bosch eBike system.

In addition to the functions shown here, changes to software relating to troubleshooting and functional modifications may be introduced at any time.

The manufacturer accepts no liability for damage to mobile devices caused by using this product. The manufacturer accepts no liability for defects related to damage or loss due to factors outside of the manufacturer's control, or for products that were modified or damaged due to improper or incorrect use.

Product Features

The numbering of the components shown refers to the illustrations on the graphics pages at the beginning of the manual.

All illustrations of bike parts except for the drive unit, SmartphoneGrip (including operating unit), speed sensor and the corresponding holders are a schematic representation and may differ on your eBike.

(1) Front retraining bracket, movable
(2) Rear retaining bracket, fixed
(3) USB port with USB cap
(4) Release mechanism
(5) SmartphoneGrip mount
(6) Snap-in hook
(7) Socket contacts
(8) SmartphoneGrip contacts
(9) Status LED
(10) Inductive charging coil
(11) Display mount fastening screw
(12) Removal blocker
(13) Keypad lock
(14) Hex key
(15) Smartphone
(16) Adapter tray

Technical Data

SmartphoneGrip		
Product code		BSP3200
USB charging output power	W	5 W (1 A at 5 Vdc)
Wireless charging output power	W	max 7.5 W (1.5 A at 5 Vdc) Efficiency > 67 %
Maximum RF output power		40.36dBuA/m at 3m distance
Frequency range	KHz	110–205
Operating temperature	°C	–5 to 40
Storage temperature	°C	10 to 40
Protection rating		IP54
Weight, approx.	g	75

Assembly

SmartphoneGrip Assembly (see figure A)

Press and hold the release mechanism **(4)** to **position** the SmartphoneGrip. Place the upper edge of the SmartphoneGrip next to the snap-in hook **(6)** of the display holder **(5)** ❶. Pull the SmartphoneGrip towards you and push the SmartphoneGrip onto the display holder ❷. Let go of the release mechanism **(4)**.

Press the release mechanism **(4)** while pulling it towards you ❶ to **remove** the SmartphoneGrip. Remove the SmartphoneGrip and let go of the release mechanism **(4)** ❷.

Inserting the Removal Blocker (see figure B)

Insert the removal blocker **(12)** into the adapter tray **(16)** from below until you hear the removal blocker **(12)** click into place.

From this point onwards, you can no longer remove the SmartphoneGrip from the display mount **(5)** without removing the display mount **(5)** from the adapter tray **(16)** by loosening the two fastening screws **(11)**.

Note: The removal blocker **(12)** is not an anti-theft device.

Smartphone Assembly (see figure C)

The SmartphoneGrip can hold smartphones in the following sizes:

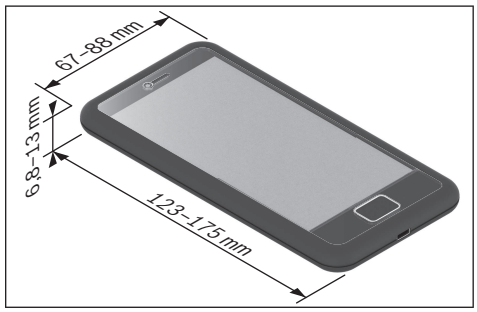

The specified dimensions include any phone cases. Smartphones with **folio cases** must not be used.

The total weight must not exceed 276 g.

Pull the front retaining bracket **(1)** forwards ❶. Insert your smartphone **(15)** with the long side of the phone positioned against the fixed retaining bracket **(2)** ❷. Release the front retaining bracket and place your smartphone **(15)** in the centre of the SmartphoneGrip ❸.

- ▶ Be careful not to pinch your fingers between the movable retaining bracket and the SmartphoneGrip when inserting your smartphone.

Once you have inserted your smartphone, check that the smartphone cannot come into contact with any hard parts on the bike even in case of vibrations, as this could cause lasting damage to the smartphone.

Keypad Lock Assembly (see figure D)

To **remove** the keypad lock **(13)**, unscrew the securing screw with a hex key (1.5 mm) **(14)** ❶ and remove the keypad lock **(13)** ❷.

To **insert** the keypad lock **(13)**, slide the keypad lock **(13)** into the provided opening and screw it into place with a hex key (1.5 mm) **(14)**.

Note: The keypad lock is not an anti-theft device. The keypad lock prevents the SmartphoneGrip from being quickly removed from the holder. The keypad lock does not affect the smartphone in any way

Note: Never leave your smartphone unattended in the SmartphoneGrip.

Operation

Starting Operation

Place your smartphone in the SmartphoneGrip.

Start the **eBike Flow** app to have riding data displayed.

Depending on the smartphone's operating system, the **eBike Flow** app can be downloaded free of charge from the Apple App Store and the Google Play store.

Use your smartphone to scan the code in order to download the **eBike Flow** app.

Charging your Smartphone

While the smartphone is in the SmartphoneGrip, it can be charged at the same time as displaying riding data. If your smartphone has an inductive charging function, you can charge the smartphone without needing a cable.

Inductive Charging

The charging process starts automatically when you place a smartphone with an inductive charging function in the SmartphoneGrip. The status LED **(9)** lights up yellow. When the smartphone is fully charged, the status LED **(9)** will light up green permanently.

The charging voltage is switched off when you remove the smartphone from the holder.

Charging via USB

If your smartphone does not have an inductive charging function, you can charge your smartphone via the USB port **(3)**. To do so, open the USB cap and connect a separate USB cable (not included in the scope of delivery) to the Micro-AB USB port.

Pay attention to the type of plug required for your smartphone when purchasing the USB cable.

Status Indicators

The status LED **(9)** indicates the following statuses with different colours and lighting patterns:

Status	Behaviour
Charging via USB	LED lights up blue.
Inductive charging starts	LED flashes yellow 3 times.
Inductive charging	LED lights up yellow.
Fully charged	LED lights up green.
Inductive charging alarm	LED flashes red.

The following alarm states are detected and will lead to the inductive charging process being interrupted:
- Detection of foreign objects, e.g. coins, keys or other metallic objects
- Temperature alarm
  The charging process will switch off at temperatures above 78 °C. The charging process is continued once the temperature drops below 56 °C.
- Overvoltage alarm at voltages above 6 V
- Undervoltage alarm at voltages below 4.2 V

Maintenance and servicing

Maintenance and cleaning

Use a soft cloth dampened only with water for cleaning. Do not use cleaning products of any kind.

▶ **Have all repairs performed only by an authorised bike dealer.**

Do not clean any of the components with pressurised water.

Transport

▶ **If you transport your eBike attached to the outside of your car, e.g. on a bike rack, remove the SmartphoneGrip and the eBike battery to avoid damaging them.**

After-sales service and advice on using products

If you have any questions about the eBike system and its components, contact an authorised bicycle dealer.

For contact details of authorised bike dealerships, please visit www.bosch-ebike.com.

Disposal

The drive unit, on-board computer incl. operating unit, battery, speed sensor, accessories and packaging should be disposed of in an environmentally correct manner.

Check that your personal data has been deleted from the device.

Do not dispose of eBikes and their components with household waste.

Please return Bosch eBike components that are no longer usable free of charge to an authorised bicycle dealer.

Subject to change without notice.

安全注意事項

請詳讀所有安全注意事項和指示。如未遵守安全注意事項與指示，可能導致火災、人員觸電及／或重傷。

請妥善保存所有安全注意事項與指示，以供日後查閱之用。

- ▶ **請仔細詳讀並遵守所有 eBike 系統操作說明書以及您的 eBike 操作說明書中的安全注意事項和指示。**
- ▶ **請勿因使用 Bosch eBike 機件而分心疏於交通狀況並請務必將雙手放在把手上。請務必遵循您所在國家許可於道路交通中使用您自行車的相關法律。特別是禁止於道路上拿起或將智慧型手機拿在手中。**
- ▶ **請適當調整螢幕亮度，使您能適當接收如車速、警告標誌等重要訊息。**未正確設定螢幕亮度可能導致危險情況發生。
- ▶ **螢幕支架的接觸面有可能變得很燙（> 60 °C）。觸摸接觸面前，請先待其冷卻。**尤其當您使用 SmartphoneGrip 時更是如此。
- ▶ **使用健身 App 應用程式前請先向醫生諮詢。**健身 App 可能造成人員體力透支。
- ▶ **使用電子設備時請注意當地的限制。**
- ▶ **應避免直接貼靠在身體部位旁的長時間持續操作。**
- ▶ **SmartphoneGrip 或其支架突出於把手時，請勿以把手和坐墊為支撐將自行車倒置。**SmartphoneGrip 或支架可能會受損且無法修復。
- ▶ **請勿將 SmartphoneGrip 作為握把使用。**若使用 SmartphoneGrip 將 eBike 提起，可能會使 SmartphoneGrip 受損且無法修復。
- ▶ **請勿將 SmartphoneGrip 拆開。**任意拆開 SmartphoneGrip 可能導致其毀損並使產品保固聲明失效。
- ▶ **小心！**使用 SmartphoneGrip 時若開啟*藍牙*®或/功能，將可能對其他裝置或設備、飛機以及醫療器材（例如心律調節器、助聽器等）產生干擾。同樣亦無法完全排除對鄰近之人員或動物造成身體危害的可能性。同樣亦無法完全排除對鄰近之人員或動物造成身體危害的可能性。請勿在醫療器材、加油站、化學設備、爆炸危險場所以及易爆環境等處附近，使用 SmartphoneGrip 的*藍牙*®功能。請勿在飛機上使用 SmartphoneGrip 的*藍牙*®功能。應避免直接貼靠在身體部位旁的長時間持續操作。

產品和規格性能

預定用途

Bosch SmartphoneGrip 是為將智慧型手機固定於 Bosch eBike 系統把手上並為其充電所設計。

除此處所示功能以外，隨時皆有可能引入軟體變更，以排除故障及更動功能。

對於行動裝置因使用本產品可能產生的損毀，製造商概不負責。對於因製造商無法控制因素而成的毀損、損失所致之瑕疵或經改造、不當使用或用於非正常用途而受損的產品，製造商概不負責。

插圖上的機件

機件的編號和本手冊最前面的詳解圖一致。

除了驅動單元、SmartphoneGrip，包括控制單元、車速感測器和所屬的支架之外，所有自行車零件的圖示皆為示意圖，可能與您的 eBike 有所不同。

(1) 前扣夾 / 活動式
(2) 後扣夾 / 固定式
(3) 帶 USB 保護蓋的 USB 連接埠
(4) 釋放裝置
(5) SmartphoneGrip 固定座
(6) 卡鉤
(7) 插座式接點
(8) SmartphoneGrip 接點
(9) LED 狀態指示燈
(10) 感應式充電線圈
(11) 螢幕固定座固定螺栓
(12) 固定板
(13) 鎖定軸針
(14) 內六角扳手
(15) 智慧型手機
(16) 轉接器外殼

技術性數據

SmartphoneGrip		
產品代碼		BSP3200
USB 連接埠充電功率	W	5 W (1 A@5 V)
無線充電功率	W	7.5 W (1.5 A@5 V) 效率 > 67 %
工作溫度	°C	−5 ... 40
儲藏溫度	°C	10 ... 40
防護等級		IP54
重量約：	g	75

安裝

安裝 SmartphoneGrip（請參考圖 A）

若要**裝上** SmartphoneGrip，請按住釋放裝置**(4)**不放。請將 SmartphoneGrip 的上緣裝在螢幕支架 **(5)** 的卡鉤 **(6)** 上 ❶。請將 SmartphoneGrip 往您的方向拉並將 SmartphoneGrip 按壓至螢幕支架上 ❷。請鬆開釋放裝置 **(4)**。

若要**取下** SmartphoneGrip，請按下釋放裝置 **(4)** 並同時將其向您的方向拉 ❶。請將 SmarthoneGrip 抬起並鬆開釋放裝置 **(4)** ❷。

插入固定板（請參考圖 B）

請從下方將固定板 **(12)** 推入轉接器外殼 **(16)**，直到清楚聽見固定板 **(12)** 卡入的聲音。

從現在起，若非透過鬆開兩個固定螺栓 **(11)** 將螢幕固定座 **(5)** 從轉接器外殼 **(16)** 拆下，將無法再將 SmartphoneGrip 從螢幕固定座 **(5)** 上抬起。

提示：固定板 **(12)** 並非防盜裝置。

安裝智慧型手機（請參考圖 C）

SmartphoneGrip 可以容納以下尺寸的手機：

此處標明的尺寸包含殼套。不得裝入裝有**翻蓋式殼套**的手機。

總重量不得超過 276 g。

請將前扣夾 **(1)** 向前拉 ❶。請將智慧型手機 **(15)** 的長邊靠在固定式卡扣 **(2)** 上 ❷。請放開前扣夾並將智慧型手機 **(15)** 置中放置在 SmartphoneGrip 上 ❸。

▶ 裝上智慧型手機時請注意您的手指不會被活動式扣夾和 SmartphoneGrip 夾住。

安裝智慧型手機後，請確保智慧型手機即使震動也不會接觸到任何自行車上的固體部分。這可能會造成智慧型手機永久性損壞。

安裝鎖定軸針（請參考圖 D）

若要**拆下**鎖定軸針**(13)**，請使用內六角扳手（1.5 mm）**(14)** 旋出防鬆螺栓 ❶ 並取下鎖定軸針 **(13)** ❷。

若要**裝上**鎖定軸針 **(13)**，請將鎖定軸針 **(13)** 推入為其所設的開口中並使用內六角扳手（1.5 mm）**(14)** 將鎖定軸針旋緊。

提示：鎖定軸針並非防盜裝置。鎖定軸針可防止 SmartphoneGrip 從支架上被快速取下。鎖定軸針對智慧型手機沒有任何作用

提示：切勿在未看管的情況下將智慧型手機留在 SmartphoneGrip 上！

使用

開始使用

請將智慧型手機裝入 SmartphoneGrip。

請開啟 **eBike Flow** 應用程式，以查看行車資料。

視智慧型手機的作業系統而定，可免費從 Apple App Store 或 Google Play Store 下載 **eBike Flow** 應用程式。

請用您的智慧型手機掃描該二維條碼，以下載 **eBike Flow** 應用程式。

為智慧型手機充電

智慧型手機在 SmartphoneGrip 上時，可以在顯示行車資料的同時充電。若您的智慧型手機支援感應式充電功能，您可以為智慧型手機進行無線充電。

無線充電

將具備無線充電功能的智慧型手機裝入 SmartphoneGrip 時，充電程序會自動開始。LED 狀態指示燈 **(9)** 將亮起黃燈。智慧型手機充滿電時，LED 狀態指示燈 **(9)** 會持續亮起綠燈。

將智慧型手機從支架拿起時，充電電壓即會切斷。

透過 USB 充電

若您的手機不支援感應式充電功能，您可以透過 USB 連接埠 **(3)** 為智慧型手機充電。為此請打開 USB 保護蓋並將一條另外的 USB 連接線（未含於供貨範圍中）連接至 Micro-AB USB 插孔上。

購買 USB 連接線時請注意您智慧型手機所需的接頭類型。

狀態指示

LED 狀態指示燈 **(9)** 會透過各種顏色和燈光模式顯示以下狀態：

狀態	行為
透過 USB 充電	LED 亮起藍燈。
開始無線充電	LED 閃爍黃燈 3 次。
無線充電	LED 亮起黃燈。
已充滿電	LED 亮起綠燈。
無線充電警示	LED 閃爍紅燈。

以下警告狀態將被偵測並導致無線充電中斷：
- 偵測到異物，例如硬幣、鑰匙或其他金屬物件
- 溫度警示
  溫度 >78 °C 時會自動切斷充電程序。溫度降至 56 °C 以下時會繼續充電程序。
- 電壓大於 6 V 時的過電壓警示
- 電壓小於 4.2 V 時的低電壓警示

保養和服務

保養和清潔

清潔時請使用柔軟且僅以清水潤濕的布。請勿使用任何清潔劑。

▶ **所有維修作業均應由授權的自行車經銷商執行。**

所有機件皆不得以高壓水清洗。

搬運

▶ **將 eBike 攜帶於車外，例如放置在汽車車頂行李架時，請將 SmartphoneGrip 及 eBike 電池取下，以避免造成損傷。**

顧客服務處和顧客諮詢中心

若有任何 eBike 系統及其機件的相關問題，請洽詢授權的自行車經銷商。

授權自行車經銷商的聯絡資訊可於網頁 www.bosch-ebike.com 取得。

廢棄物處理

驅動單元、車載電腦，包括控制單元、電池、車速感測器、配件以及外包裝均應以符合環保要求的方式進行資源回收。

請您自行確保個人資料均已從設備上刪除。

請勿將 eBike 及其機件作為一般垃圾丟棄！

請將無法再行使用的 Bosch eBike 零件帶到授權自行車經銷商處免費處理。

保留修改權。