eurekagaming

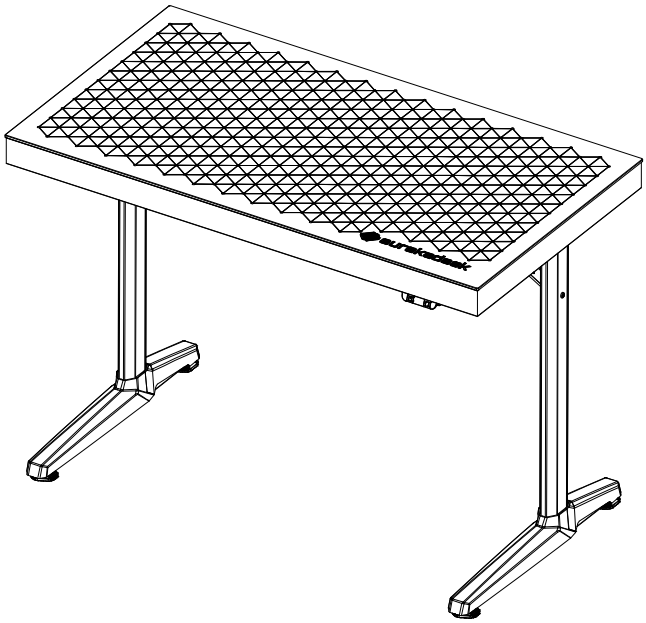

Caution: This instruction manual is intended for universal reference, slight variations in part dimensions are normal.

GTG-I43-V1

COMPONENT

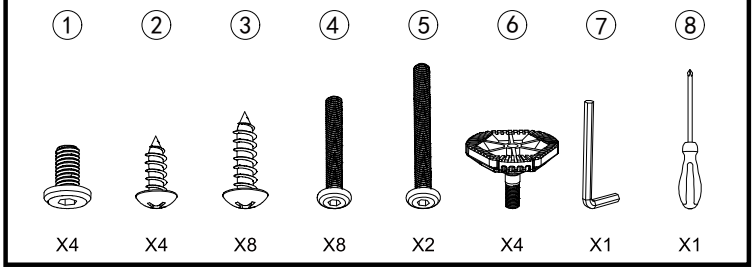

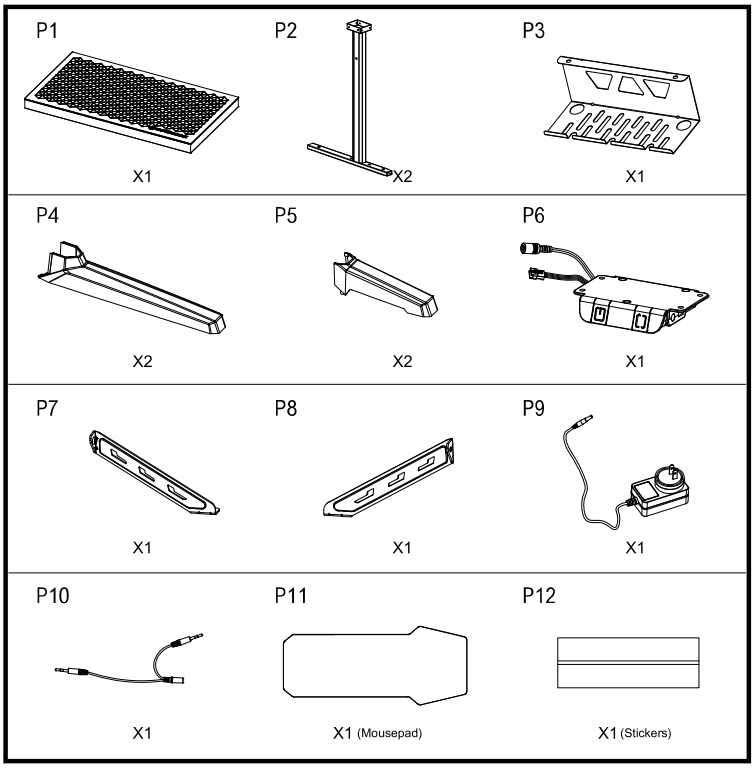

1

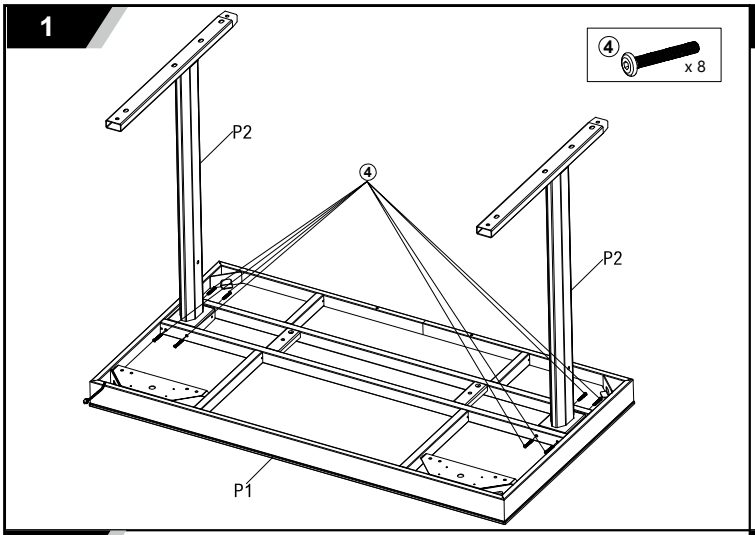

2

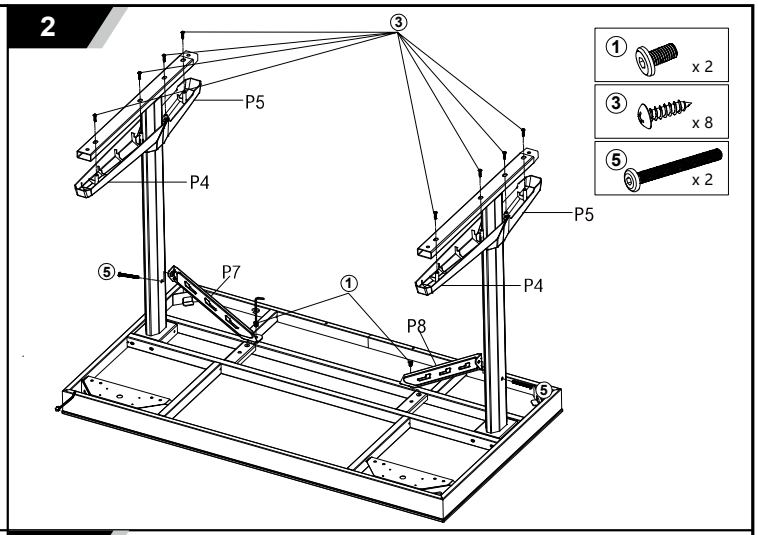

3

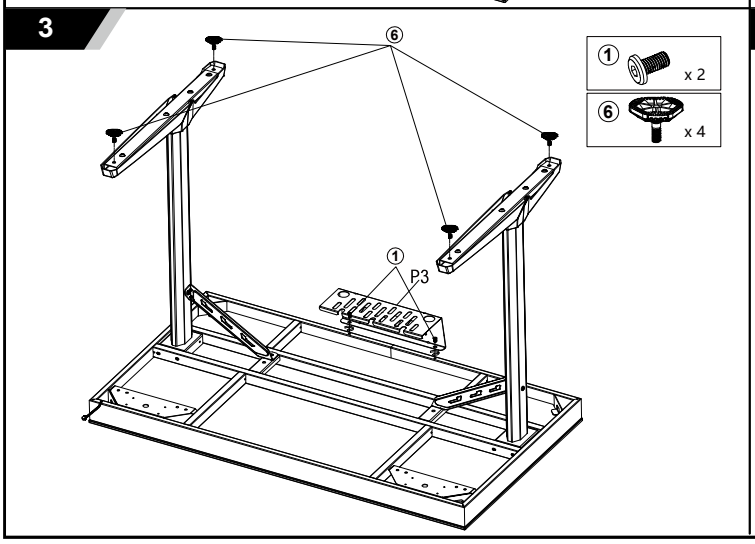

4

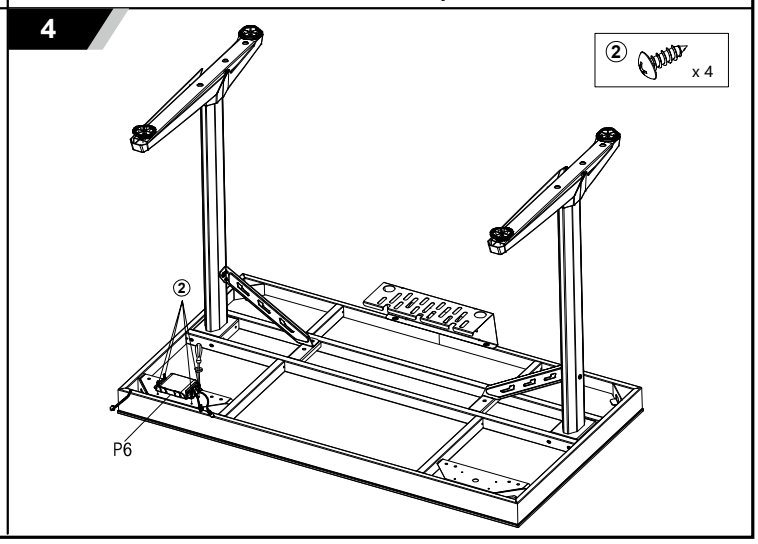

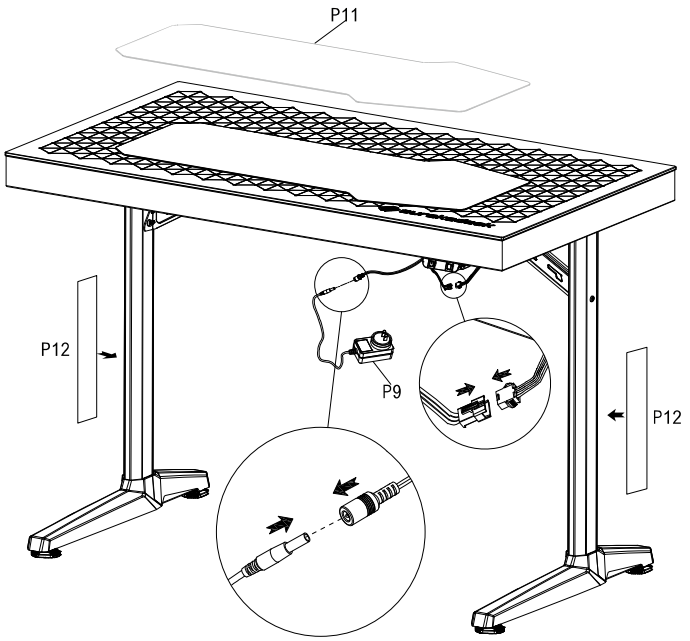

ACCESSORY

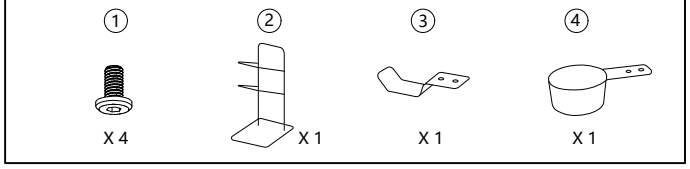

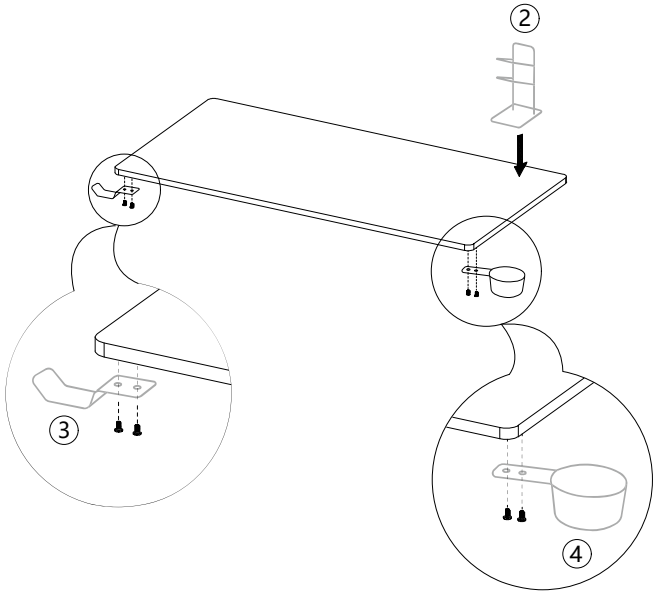

LIGHTING CONTROL INSTRUCTIONS

FEATURES:

- User-friendly operation system: Remote control on the gaming desk by mobile App.
- There are 27 music spectrum modes, 1 static color effect and 10 kinds of conventional non-music effects.
- Used energy saving setting.
- With buttons to switch the light mode and switch machine functions, easy to operate.
- Sleep shutdown mode: When you choose the sleep mode on the APP page , system light will turn into a warm yellow light. The lights dim gradually over time, and the system shuts down automatically until the lights disappear after 15 minutes.

DOWNLOAD AND INSTALL MOBILE APP:

- The desk is controlled by a mobile app, which is available by both Android and IOS devices.
- iPhones require IOS 10.0 or higher. Android phones require Android 4.4 or higher.
- For iPhone system, Please search 'Eureka Light' in App Store and download the APP.
- For Android system, enter the address http://www.designa.cn/app/Eureka0520.apk in the browser and download the APP.

OPERATION METHOD

- STEPS OF CONNECTING THE APP:

1. Turn on Bluetooth and allow location services.
2. Open the app, click re-scan and refresh the device list. You will find a device called “EUKLED”, click connection. You can press and hold the name of the device in the list to rename the device.
3. Click “Enter” to finish the setup.

- KEY OPERATION STEPS:

1. Light mode switch: press the control box switch key "[ ]" to switch the mode, each time you press the light will switch to a different mode, a total of 38 types. Starting from static red, the first 12 are non-music lighting effect modes, and the last 26 are music spectrum lighting effect modes.
2. Turn off the light: press and hold the power button" ⏻ " on the control box for about 2 seconds to turn off the light; press the power button " ⏻ " of the control box shortly, there will be a warm yellow gradient light effect prompt, and the light is turned on successfully.
3. The APP is not compatible with the switch key:

a. When the app is connected to the system and the set light is on, pressing the control box switch key "[ ]" will not be able to switch modes, but the lights will flash as a reminder.
b. When the app is connected to the system and the light of the app is set to off, press the control box switch key "[ ]" to exit the light-off state.

SWITCHING THE AUDIO MODE:

（**Note: Y Adapter is the AUX line that has 1 Female Stereo TRS Plug to 2 Male Stereo Splitter Cable**）

a. Use the AUX mode: While you plug in the Y Adapter, It will automatically switch to the AUX mode.
b. Use the Microphone Mode: While the Y Adapter is not plug in, it will automatically switch to the Microphone Mode.

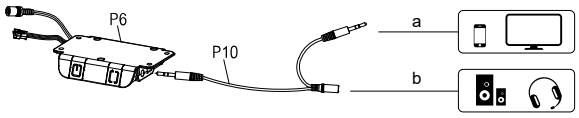

COMMON TROUBLESHOOTING:

- LIGHTING TROUBLESHOOT:

1. Please check whether the connection between the power cord, light connection line and the control box of the table is setup correctly according to the wiring diagram in the manual.
2. Please confirm whether there is any response when pressing the power button " ⏻ " of the control box.
3. Please check whether the power adapter and socket are plugged in.
4. Please check whether the audio cable and the controller are connected.
5. Please confirm whether there is music playing during the music reaction mode. If the system detects that there is no music signal when the music is not playing, the light is not bright.

- MOBILE APP TROUBLESHOOT:

1. Please confirm whether Bluetooth and positioning permission are turned on.
2. If the application is connected when the desk light is off, please confirm whether the system has been turned on. (press the control box power " ⏻ ", if the desktop lighting responds, that will indicate that the system is turned on).

(**REMINDER:** When the table is plugged in, the lighting system is turned off by default. After powering on, you need to press the control box power button " ⏻ ", there will be a warm yellow gradual start-up light effect, indicating that system start-up.)

TECHNOLOGY PARAMETERS:

Operating Temperature	Operating Voltage	Working Current	Rated Power	Remote Control Distance	Static Power Estimation
-20˚C~60˚C	DC5V	3A	15W	20M	110mA

CONTACT US:

1. Tel: 844-416-2090
2. Website: www.eurekaergonomic.com
3. E-mail: customerservice@eurekaergonomic.com

灯光控制器操作说明

一、特点：

- 手机APP控制，遥控距离远，操作人性化。
- 内置27种音乐随动模式、1种静态常规非音乐花样效果和10种动态常规非音乐花样效果。
- 具有掉电保存设置参数功能。
- 具有按键切换灯光模式及开关机功能，操作方便。
- 具有睡眠关机模式：在APP页面中点击睡眠模式后，系统灯光会转变成暖黄色灯效。灯光随着时间的推移逐渐变暗，直到15分钟后灯光消失，系统自动关闭。

二、下载安装手机APP：

- 本控制器由手机APP进行控制. 支持IOS和安卓系统。
- 苹果手机需要 IOS10.0 或更高版本；安卓手机需要 ANDROID4.4 或者高版本。
- 苹果手机可在 App Store搜索 “Eureka Light” 找到 APP。
- 安卓手机可在浏览器中输入地址http://www.designa.cn/app/Eureka0520.apk后直接进入下载APP。

三、操作方法：

- APP连接步骤：

1. 确保打开手机（或平板）蓝牙功能，且打开定位权限。
2. 打开 APP--点击“重新扫描控件”刷新设备列表—找到名字为“EUKLED”的设备--点击连接。连接成功后如有需要可长按设备名进行更改。
3. 设置完成后点击进入即可。

- 按键操作步骤：

1. 灯光模式切换：按控制盒切换键“[ ]”进行模式切换，每按一次灯光会切换成不同的模式，共38种。由静态红色开始算前12种为非音乐灯效模式，而后26种为音乐随动灯效模式。
2. 灯光关启：长按控制盒电源键“ ⏻ ”约2秒，灯光关闭；短按控制盒电源键“ ⏻ ”会有暖黄色渐变灯效提示，灯光开启成功。
3. APP与切换键不兼容：

a. 当APP连接系统且设置的灯光呈开启状态时，按控制盒切换键“[ ]”不能切换模式，但会有灯光闪烁一下的提示。
b. 当APP连接系统且设置APP的灯光呈关闭状态时，按控制盒切换键“[ ]”可以退出关灯状态。

四、音频输入模式切换：

a. 音频线输入模式：当插入一分二音频线到AUX IN接口时，控制器将会自动切换到音频线信号输入模式。
b. 麦克风输入模式：当不插一分二音频线到AUX IN接口时，控制器将会自动切换到麦克风信号输入模式。

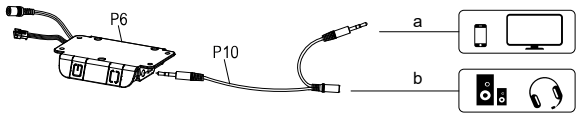

五、常见故障排查：

- 灯光不亮：

1. 请按照说明书的线路排布图检查桌子的电源线、灯光连接线与控制盒连接是否处于正常状态。
2. 请确认按控制盒电源键 “ ⏻ ” 开机是否有反应。
3. 请检查桌子配套的电源适配器与插座是否均已插好。
4. 请检查音频线与控制器是否处于连接状态。
5. 请确认在音乐随动模式下是否有播放音乐，如果在未播放音乐的情况下，系统检测到无音乐信号，灯光也是不亮的。

- APP连接不上：

请确认蓝牙和定位权限是否打开；如在没有亮灯的情况下连接，请确认系统是否已经开机（按控制盒电源 “ ⏻ ” ，桌面灯光有反应，说明已经开机）。

温馨提示： 桌子插上电源灯光系统默认关机状态，通电后需短按控制盒电源键 “ ⏻ ” ，会有暖黄色渐变的开机提示灯效，说明正常开机。

六、技术参数：

工作温度	额定电压	最大电流	额定功率	遥控距离	静态功耗
-20˚C~60˚C	DC5V	3A	15W	20M	110mA

七、联系我们

1. 咨询电话：18144956470
2. 官方网址：www.designa.cn
3. 在线客服：请登录京东淘宝搜索易瑞康、赛途官方旗舰店

FCC Caution:

This device complies with part 15 of the FCC Rules. Operation is subject to the following two conditions: (1) This device may not cause harmful interference, and (2) this device must accept any interference received, including interference that may cause undesired operation.

Any Changes or modifications not expressly approved by the party responsible for compliance could void the user's authority to operate the equipment.

Note: This equipment has been tested and found to comply with the limits for a Class B digital device, pursuant to part 15 of the FCC Rules. These limits are designed to provide reasonable protection against harmful interference in a residential installation. This equipment generates uses and can radiate radio frequency energy and, if not installed and used in accordance with the instructions, may cause harmful interference to radio communications. However, there is no guarantee that interference will not occur in a particular installation. If this equipment does cause harmful interference to radio or television reception, which can be determined by turning the equipment off and on, the user is encouraged to try to correct the interference by one or more of the following measures:

-Reorient or relocate the receiving antenna.

-Increase the separation between the equipment and receiver.

-Connect the equipment into an outlet on a circuit different from that to which the receiver is connected.

-Consult the dealer or an experienced radio/TV technician for help.

The device has been evaluated to meet general RF exposure requirement. The device can be used in portable exposure condition without restriction.