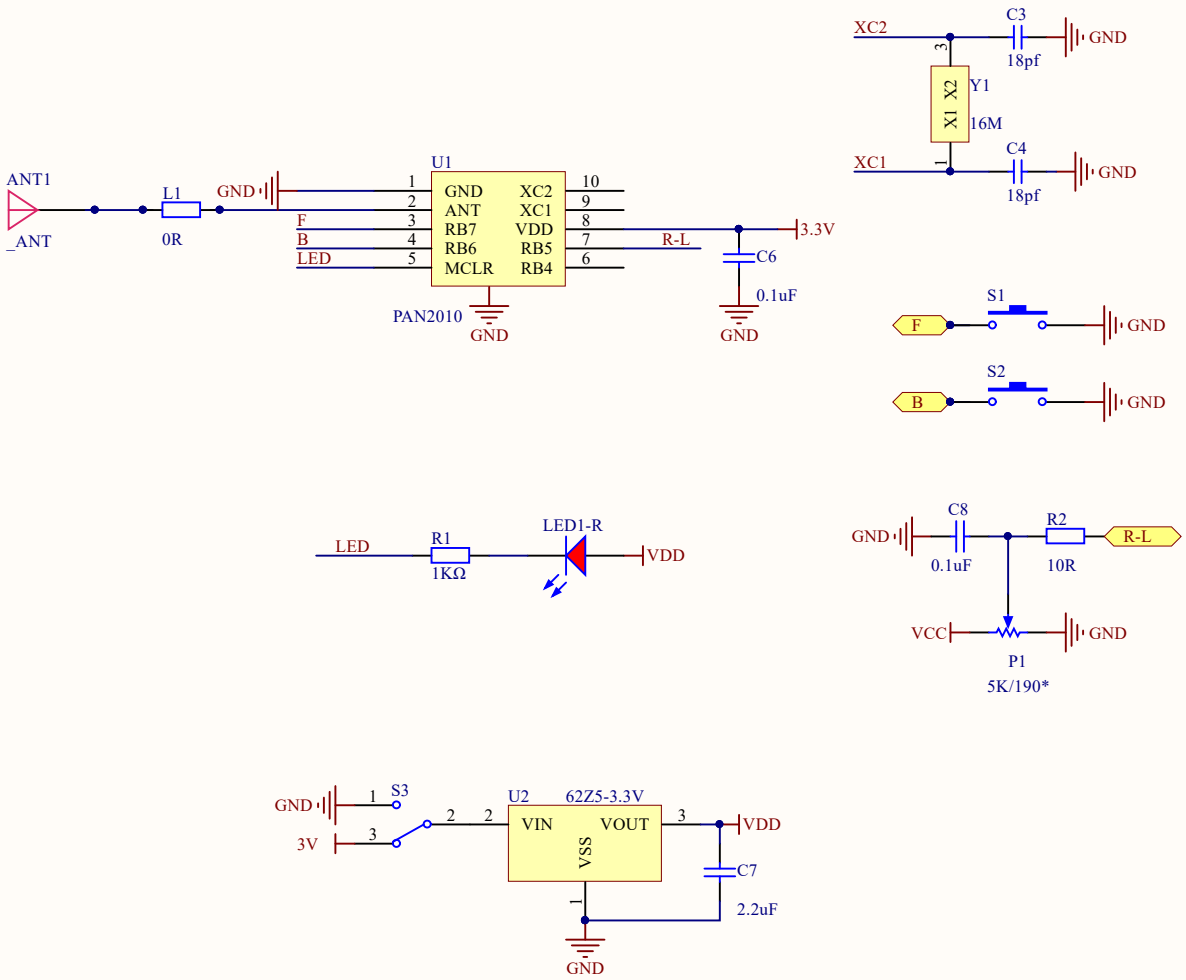

Title		
Size A4	Number	Revision
Date: 2023/3/28		Sheet of
File: D:\Users\..\XHY7.4VTX.SchDoc		Drawn By: