INTAMSYS

3D Printer User Manual

FUNMAT PRO 310 NEO

Engineering Materials | Desktop Industrial Grade

Contents

1 SERVICE AND SUPPORT 1

1.1 SERVICE 1
1.2 SAFETY INSTRUCTIONS 1
1.2.1 Hazard Type 1
1.2.2 Areas with Potential Safety Hazard 2
1.2.3 Safety Door Lock 4
1.2.4 Environmental Requirements 4

2 SETTING AND INSTALLATION 5

2.1 GENERAL INFORMATION 5
2.1.1 Tools that come with the Printer 5
2.1.2 Prepare Relevant Equipment for Installation 5
2.1.3 Check the Printer Nameplate 5
2.2 PRINTER PREPARATION 5
2.2.1 Unpacking 5
2.2.2 Remove Accessories 5
2.2.3 Unbuckle X-axis and Y-axis 6
2.2.4 Startup 8
2.2.5 Install the Printing Builplate 8

3 SYSTEM COMPONENTS 11

3.1 PRINTER OVERVIEW 11
3.2 TOP DOOR AND USER OPERATION INTERFACE 12
3.3 PRINTING CHAMBER COMPONENTS 13
3.4 PRINT HEAD ASSEMBLY 14
3.5 X-AXIS AND Y-AXIS COMPONENTS 14
3.6 Z-AXIS COMPONENTS 17
3.7 HOTBED COMPONENTS 18
3.8 INDEPENDENT FILAMENT BOX 19

4 USER INTERFACE 20

4.1 OVERVIEW 20
4.1.1 Status Bar 20
4.1.2 Navigation Bar 21
4.1.3 Display Area 21
4.2 MAIN INTERFACE 22
4.2.1 Load Print Files 23
4.2.2 Main Status Area 24
4.2.3 Auxiliary Status Area 24
4.2.4 Control Area 25
4.3 QUEUE 26

4.4 MATERIAL 27
4.4.1 Material Selection *28*
4.4.2 Material Loading *29*
4.4.3 Material Unloading *30*
4.4.4 Supply Material after Out-of-material Alarm *31*
4.4.5 Material Database Management *32*
4.5 TOOLS 34
4.5.1 Axis *34*
4.5.2 Calibration *36*
4.5.3 Tune *44*
4.6 SETTINGS 45
4.6.1 Device Information *45*
4.6.2 Remote Print *46*
4.6.3 Camera Settings *47*
4.6.4 Motor Enabling *47*
4.6.5 Automatic Screensaver Settings *48*
4.6.6 Manual Calibration of Printing Platform Leveling *48*
4.6.7 Manual L&R Nozzle Z Offset *51*
4.6.8 Wi-Fi Settings *54*
4.6.9 Wired Network Settings *55*
4.7 OTHER INTERFACES 56
4.7.1 Warning Prompt *56*
4.7.2 Resuming Print *56*
4.7.3 Command Line *57*

5 OPERATING THE PRINTER 58

5.1 STARTUP AND SHUTDOWN OF DEVICE 58
5.1.1 Power on the Printer *58*
5.1.2 Power off the Printer *58*
5.2 PREPARATION OF PRINT MATERIALS 59
5.3 NOZZLE REPLACEMENT OR MATERIAL CHANGE 62
5.3.1 Replace the Nozzle *63*
5.3.2 Change Material before Printing *63*
5.3.3 Pause to Change Material *63*
5.4 BASIC PRINTING AND PROTOTYPING OPERATIONS 64
5.4.1 Prepare the Printer *64*
5.4.2 File Slicing *65*
5.4.3 Import the Print File to the Printer *68*
5.4.4 Printing and Prototyping Process *74*
5.4.5 Duplicate/Mirror Print *75*
5.4.6 Continue Printing *77*
5.4.7 Pause Printing *79*
5.4.8 Stop Prototyping *80*
5.4.9 Prototyping Alarm *80*
5.4.10 After Prototyping is Completed *81*

5.4.11 Locking of Front Door and Top Door *82*
5.5 PRINTER STATUS 82
5.5.1 Temperature Status *82*
5.6 SOFTWARE/FIRMWARE UPDATE 83
5.6.1 Update through LAN *83*
5.6.2 Update through U-disk *87*
6 MAINTENANCE 88
6.1 INSPECTION BEFORE EACH PRINTING 88
6.1.1 Inspect the Printing Platform *88*
6.1.2 Clean the Printing Chamber *88*
6.1.3 Inspect the Nozzle *89*
6.1.4 Check the Humidity of the Material Chamber *89*
6.2 MAINTENANCE AFTER EACH PRINTING 90
6.2.1 Clean the Printing Buildplate *90*
6.2.2 Clean the Nozzle *90*
6.2.3 Clean the Chamber *91*
6.3 REGULAR MAINTENANCE 91
6.3.1 Replace the Nozzle *91*
6.3.2 Clean Feeding Gears of the Extruder *91*
6.3.3 Clean the Fans *91*
6.3.4 Maintenance of Moving Parts *92*
6.3.5 Maintenance of Chamber Filter *93*
6.3.6 Maintenance and Replacement of Feeding Pipe *93*
6.4 OTHERS 95
7 TROUBLE SHOOTING 96

Record of Modification and Version Description

Version	Time	Description
E01	July 2024	First version of the Manual

1 Service and Support

This chapter provides information on the service and support of FUNMAT PRO 310 NEO desktop industrial grade 3D printers (hereinafter referred to as "FUNMAT PRO 310 NEO", the "printer", the "machine" or the "device"), as well as safety information and location of safety labels.

1.1 Service

If you have any questions not covered in this manual during the use of the printer, please contact INTAMSYS Customer Support:

Region	Email
Asia-Pacific	Support_APAC@intamsys.com
Europe, Middle East and Africa	Support_EMEA@intamsys.com
America	Support_America@intamsys.com

1.2 Safety Instructions

The following basic security tips are intended to ensure safe installation, operation, and maintenance of INTAMSYS device, and shall not be considered as comprehensive safety issues. The machine is a safe and reliable industrial grade 3D printer. Make sure to inspect for and eliminate potential hazards, if any, in the printer area before using this printer.

1.2.1 Hazard Type

INTAMSYS recommends that all services be provided by qualified personnel. All personnel who operate this printer or are near it shall understand the meaning of the following hazard classification signs used in this manual.

[High Voltage Warning]: It indicates that high voltage exists. Keep away from exposed circuits, and it is recommended to remove all ornaments.

[High Temperature Warning]: It indicates a high printer temperature. Be cautious when working near components that are exposed to heat. Always wear the safety gloves that come with the printer.

The temperature of the print head in the printer can reach up to 350℃.

The temperature of the printing platform in the printer can reach up to 160°C.

The temperature in the chamber of the printer can reach up to 100°C.

[Pinching Warning]: It indicates that your hands might be pinched between two objects. One or more objects are moving in your working area.

This device contains licence-exempt transmitter(s)/receiver(s) that comply with Innovation, Science and Economic Development Canada's licence-exempt RSS(s). Operation is subject to the following two conditions:

(1) This device may not cause interference.

(2) This device must accept any interference, including interference that may cause undesired operation of the device.

l'appareil contient des émetteurs/récepteurs exempts de licence qui sont conformes aux CNR exempts de licence d'Innovation, Sciences et Développement économique Canada. L'exploitation est soumise aux deux conditions suivantes :

(1) l'appareil ne doit pas produire de brouillage,

(2) l'utilisateur de l'appareil doit accepter tout brouillage radioélectrique subi, même si le brouillage est susceptible d'en compromettre le fonctionnement.

This equipment complies with FCC /IC RSS-102 radiation exposure limits set forth for an uncontrolled environment. This equipment should be installed and operated with minimum distance 20cm between the radiator & your body.

ce matériel est conforme aux limites de dose d'exposition aux rayonnements, FCC/CNR-102 énoncée dans un autre environnement.cette eqipment devrait être installé et exploité avec distance minimale de 20 entre le radiateur et votre corps.

Please note that changes or modifications without the approval of the responsible party for compliance may invalidate the user's permission to operate the device.

- The device complies with Part 15 of the FCC Rules and the Industry Canada License-exempt RSS Standard. The following two conditions should be met for operation:

  1. The device may not cause harmful interference;

  2. The device must accept any interference received, including interference that may lead to undesired operation.

1.2.2Areas with Potential Safety Hazard

The following components and areas have been highlighted as with potential hazards. Failure to follow the safety regulations might cause system faults or reliability issues.

Extruder

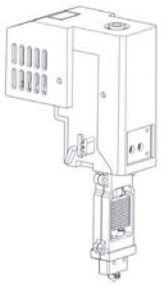

[High Temperature Warning]: Make sure to wear safety gloves if it is necessary to maintain the extruder or work inside the chamber when the extruder is heated.

Printing platform 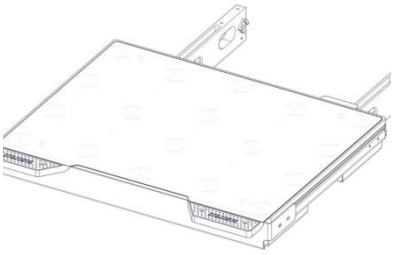		[High Temperature Warning]: Make sure to wear safety gloves if it is necessary to remove the printing Build Plate of the platform or work inside the chamber when the hotbed is high in temperature.
Chamber		[High Temperature Warning]: Make sure to wear safety gloves if you work inside the chamber at medium and low temperatures during heating; it is not recommended to work in the chamber at high temperatures.
XY motion frame 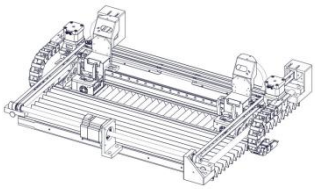		[Pinching Warning]: Do not wear tie, loose clothing, or hanging ornaments when working near a moving printer component. [Pinching Warning]: Do not click HOME when there is a model on the platform. [Pinching Warning]: Be careful when maintaining this moving component.
Z-axis motion frame 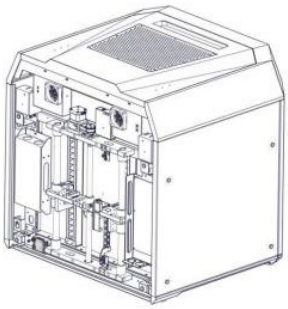		[Pinching Sign]: Do not wear tie, loose clothing, or hanging ornaments when working near a moving printer component. [Avoid Collision]: If there is a printed model on the platform, be care to raise the platform to a proper height to prevent puncturing the organ cover; [Avoid Collision]: If there is an object under the platform, be care to lower the platform to a proper height to prevent deformation of drive rod parts

and leveling failure caused by platform collision.

1.2.3 Safety Door Lock

Sensors are used to monitor the status of the chamber front door and printer top cover. For the purpose of safety, the chamber door and top cover shall be closed before the XYZ motor can start working. The electromagnetic lock ensures that the chamber door and top cover remain securely closed during printing.

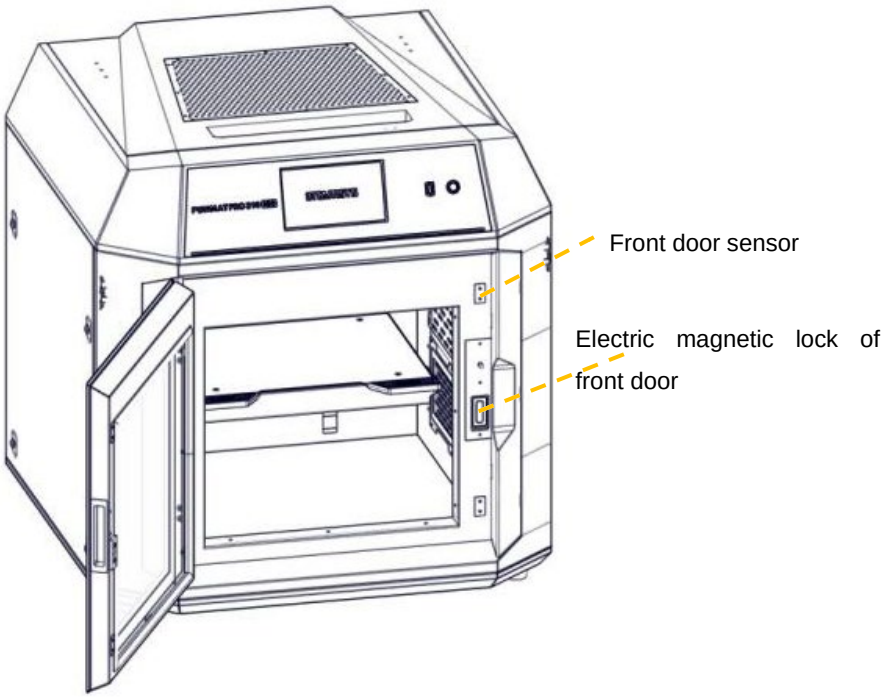

Fig. 1.1 Safety Door Lock

1.2.4 Environmental Requirements

- The printer is for indoor use only.
- Air quality conditions (conductive or non-conductive) with excessive solid particles might cause damage to the system.
- The printer shall operate between 0°C and 30°C (32°F to 86°F) with a relative humidity range of 20% to 70% (non-condensing).
- The printer storage temperature shall be between -20°C and 55°C (-4°F to 131°F) with a relative humidity range of 10% to 90% (non-condensing).

2 Setting and Installation

This chapter describes the basic settings and installation of FUNMAT PRO 310 NEO.

2.1 General Information

2.1.1 Tools that come with the Printer

Please check the packing list that comes with the printer. These tools include common tools required for printer maintenance and various spare parts.

2.1.2 Prepare Relevant Equipment for Installation

The guide for preparation of installation site ensures that relevant equipment for printer installation can be prepared effectively and safely.

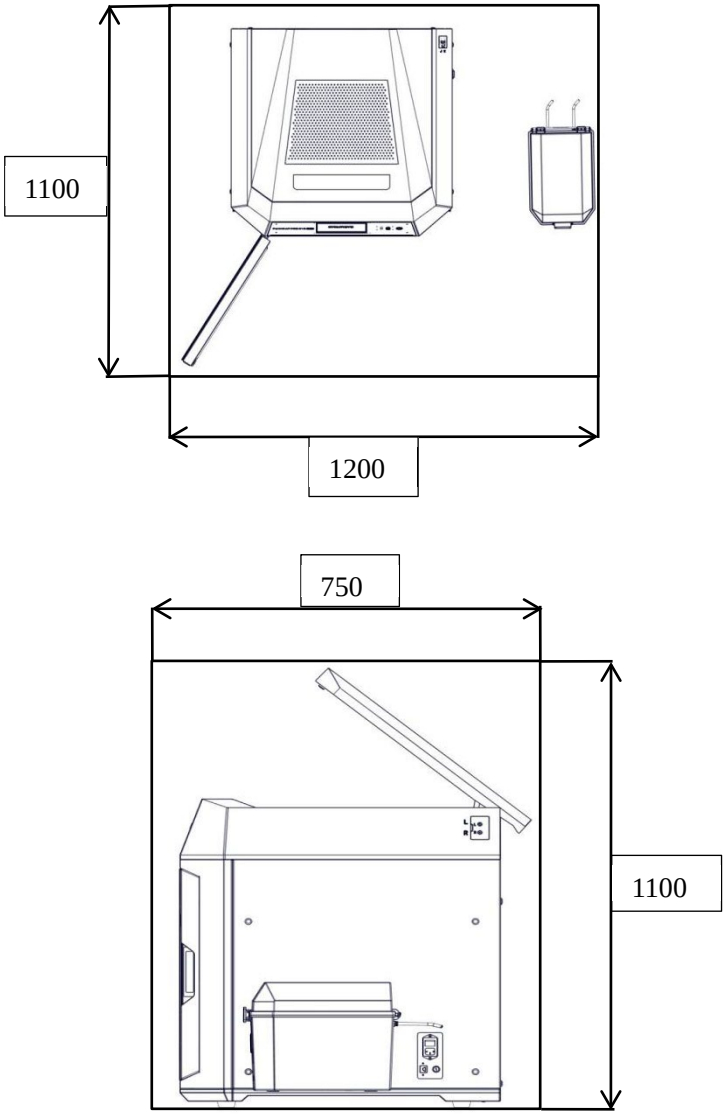

Fig. 2.1 Space Required for Installation and Maintenance (Unit: mm)

2.1.3 Check the Printer Nameplate

Refer to the figure below to identify your printer.

Model information: Product name, model number and power requirements. This nameplate also lists the relevant certifications and INTAMSYS information.

SKU: Lists the SKU of the printer. Upon a service request, provide this SKU to the agent or INTAMSYS, so that service personnel can quickly identify your printer configuration.

Fig. 2.2 Printer Nameplate

2.2 Printer Preparation

2.2.1 Unpacking

Step 1：Remove the protective film and fixing tape on the outside of the packaging box.

Step 2：Remove the wooden board at the top of the packaging box and the top cover of the packaging box in sequence.

Step 3：Remove the cardboard and foam around the packing box.

Lift the printer from the bottom and place it to a stable platform (at least two people are required).

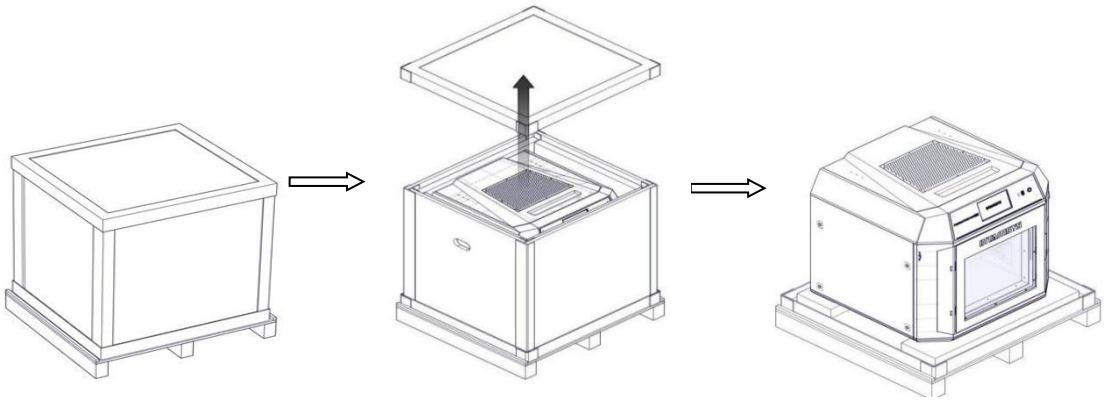

Fig. 2.3 Schematic Diagram of Packaging Removal

2.2.2 Remove Accessories

Open the front door of the device from the front, and carefully take out the accompanying

accessories and material boxes. As the platform would be tightly compressed against internally packaged foam cotton due to the impact of vibration and self-gravity during transportation, the machine shall be energized to raise and reset the platform before removing the accompanying accessories and material boxes. Refer to the Quick Start Guide for this step.

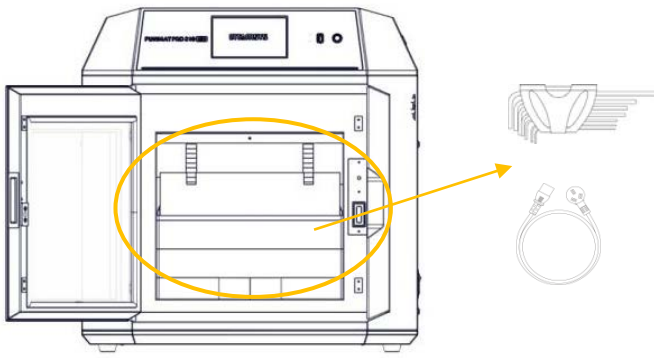

Fig. 2.4 Removing Accessories

2.2.3 Unbuckle X-axis and Y-axis

Step 1: Open the top door of the printer;

Step 2: The fixing block on the X-axis guide rail is used to ensure the stability of the extruder during transportation. Unscrew the two screws on the fixing block with a 3 mm Allen wrench (the Allen wrench is placed in the spare parts box), and then remove the X-axis fixing block.

Step 3: Remove the Y-axis fixing block fixed on the front side sheet metal in the same way, and then install the spare screws in the plastic bag back to their original positions;

Step 4: When the power is off, gently push the print head leftward in X direction to move out enough operating space and remove the right fixing block of Y-axis with the same method.

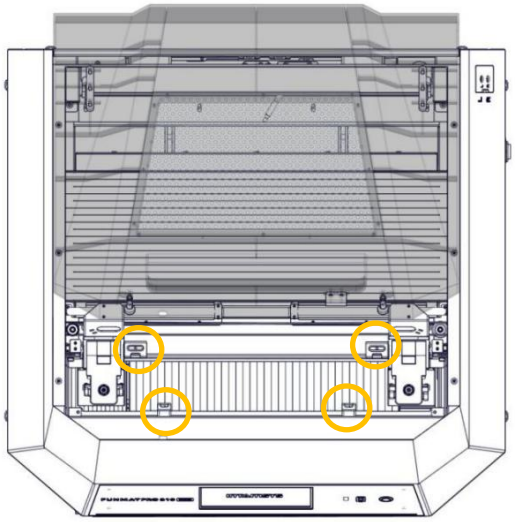

Fig. 2.5 Positions of X-axis and Y-axis Fixing Blocks

Step 5: Install the left and right extruders in the extruder holder as shown in the figure;

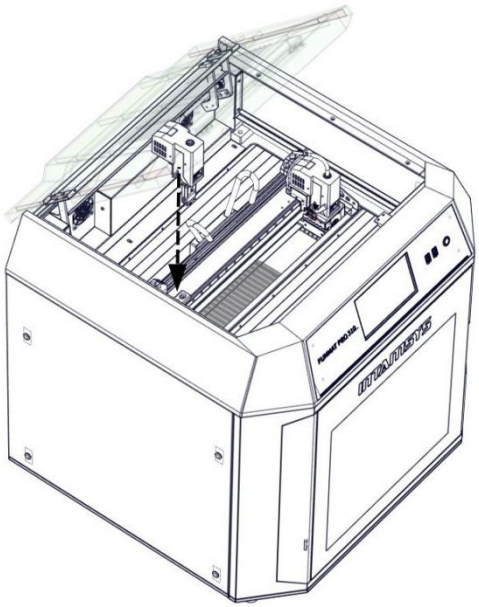

Fig. 2.6 Installing the Extruder

Step 6: Rotate the pressure levers on both sides of the extruder holder upward to fix the extruder in the extruder holder, and plug in the extruder cable.

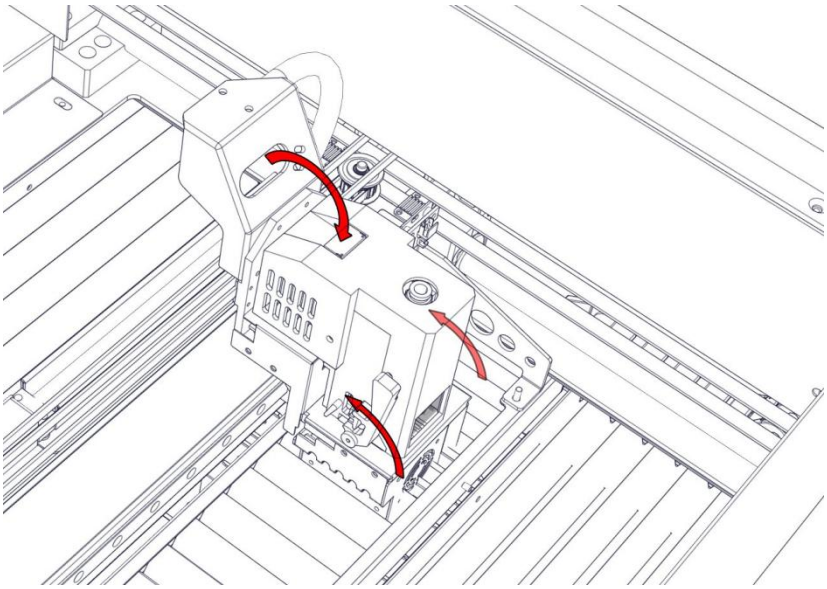

Fig. 2.7 Securing Extruder

2.2.4 Startup

Step 1: The printer has two power specifications: 110V and 220V. Please make sure to check whether the socket power supply meets the requirements before use;

Step 2: Insert one end of the power cord into the right power supply port of the printer, and insert the other end into the power socket prepared in advance;

Step 3: Turn on the switch and press the start button at the lower right of the printer to enter the operation interface;

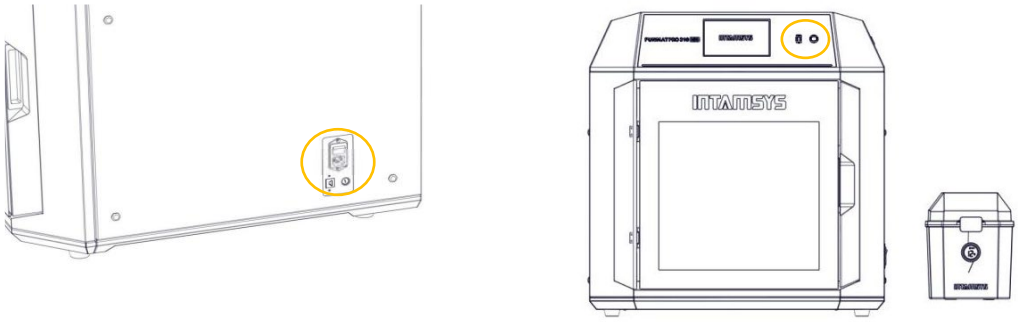

Fig. 2.8 Startup of FUNMAT PRO 310 NEO Printer

2.2.5 Install the Printing Builplate

Step 1: Enter the "Tools" interface on the right in the main interface, select "Z Build Plate", and click the "Home All" button (make sure that there are no other sundries in the chamber before operation);

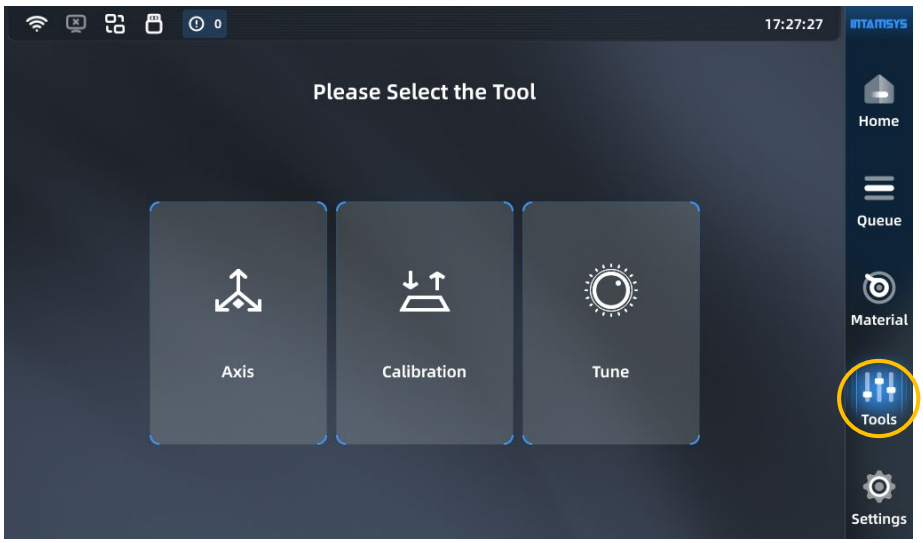

Fig. 2.9 Tools Interface

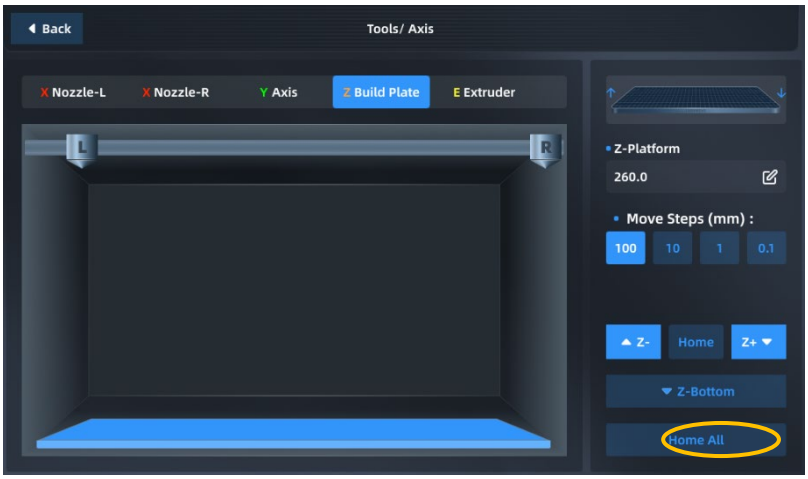

Fig. 2.10 "Home All" Operation Interface

Step 2: Click "Z-Bottom" to move the printing platform to the bottom of the chamber;

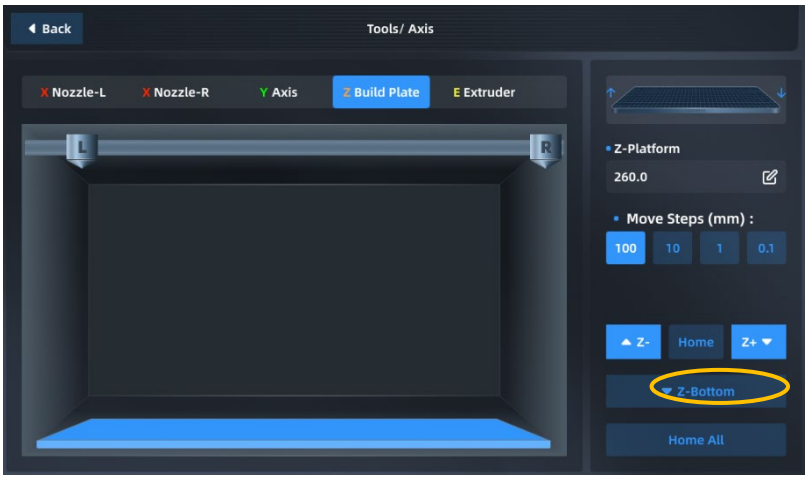

Fig. 2.11 Platform Lowering Operation Interface

Step 3: Flatly adsorb the printing buildplate above the magnetic platform along the guide grooves on both sides of the platform, as shown in the figure.

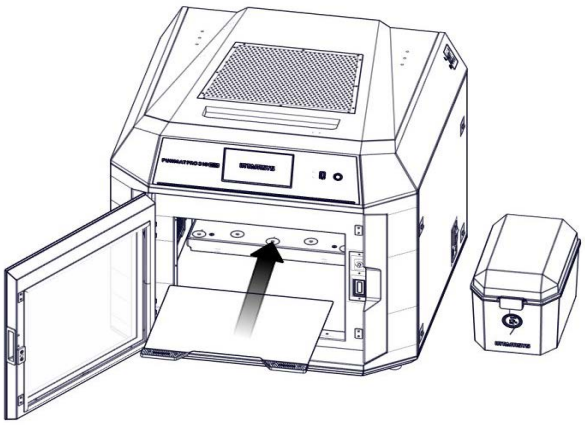

Fig. 2.12 Installing the Printing Buildplate

3 System Components

This chapter describes the system components of FUNMAT PRO 310 NEO, aiming to help users better understand the composition of the printer and the functions of each part.

3.1 Printer Overview

The visible parts of the printer are shown in the following figure:

The right side plate, left side plate and rear side plate of the housing are removable for access to internal components; the top door and front door must be closed during printing and locked by electromagnetic locks.

1. Product Appearance

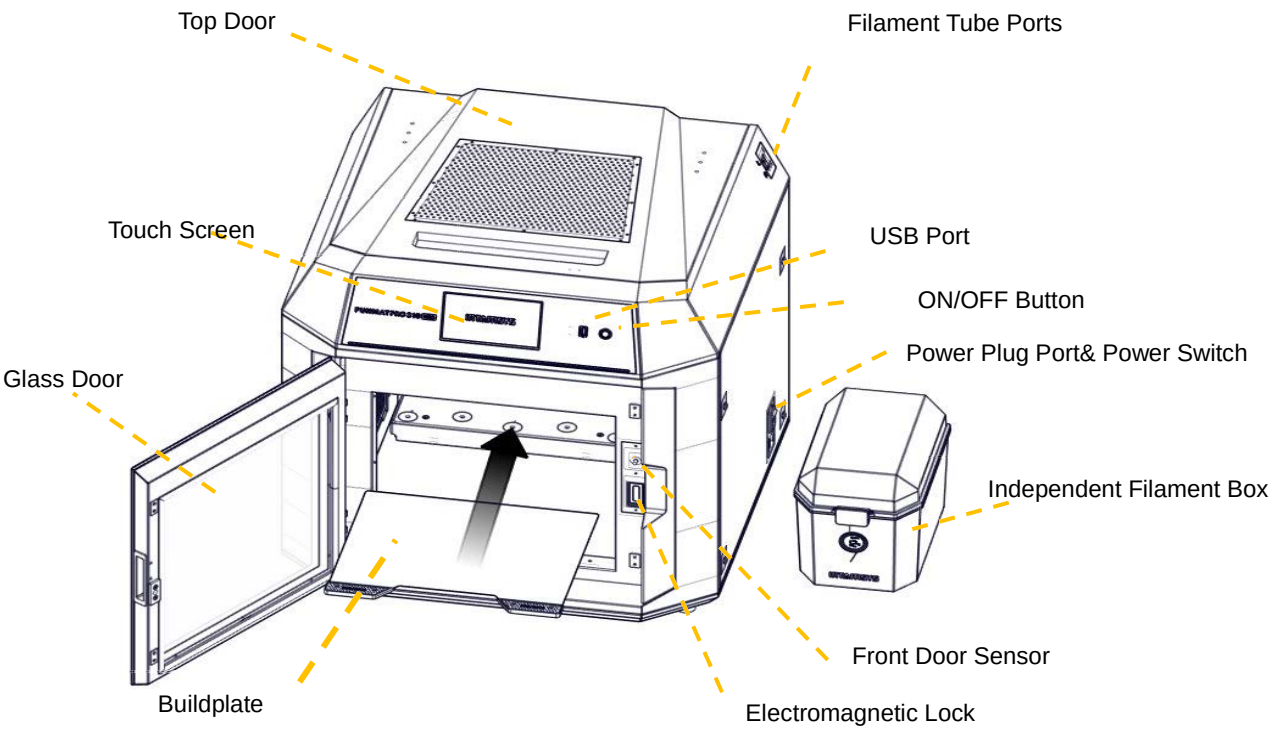

Fig. 3.1 Front View of Printer

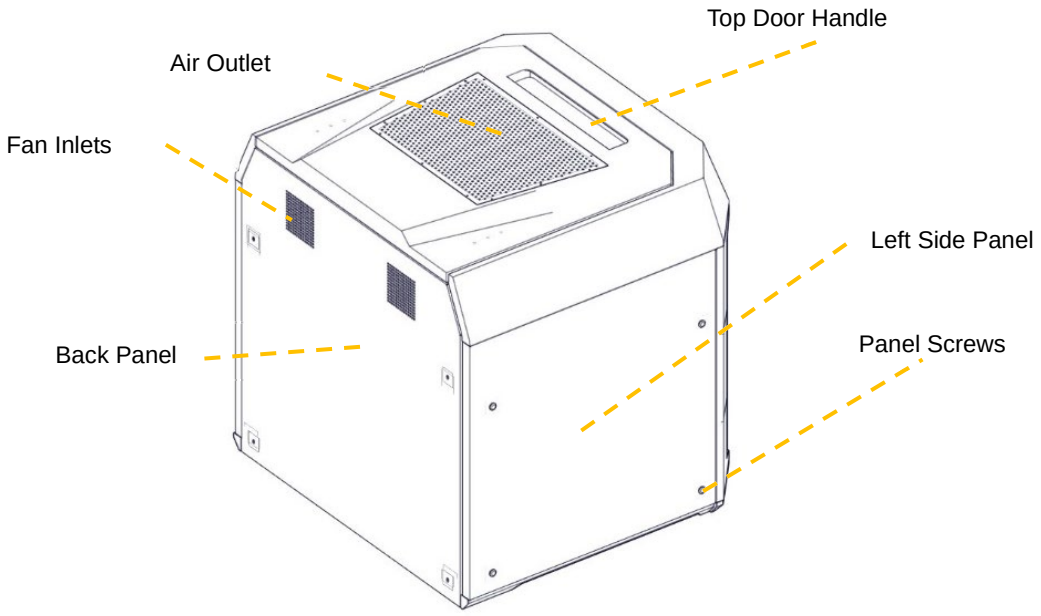

Fig. 3.2 Rear View of Printer

3.2 Top Door and User Operation Interface

Push the top door upward to observe the movement of extruder from above and for the maintenance of XY rack and print head assembly.

By releasing the electromagnetic lock through screen operation, the top door can be pushed upward and supported by damping hinges. The damping hinge can ensure that the top door stops at any opening or closing position.

Below the top door is the user interaction area, which includes touch screen, USB port and ON/OFF button.

Users can control the print part and obtain the machine status information through the touch screen. The USB port is used to insert the U-disk to print and software and firmware. The ON/OFF button is used for startup and shutdown, as well as emergency shutdown.

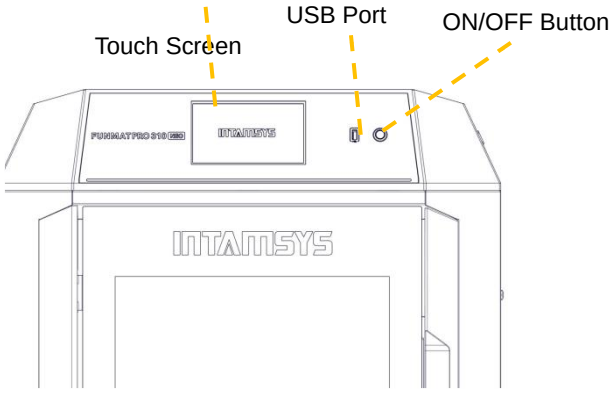

Fig. 3.3 Schematic Diagram of User Operation Area

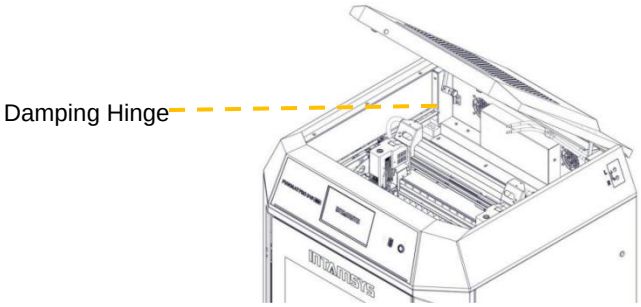

Fig. 3.4 Schematic Diagram of Top Door Opening

3.3 Printing Chamber Components

The front door can be pulled open from the right side by the release of the electromagnetic suction of the front door through screen operation, and then it can be seen that the printing chamber contains front door, hotbed, double extruder assembly, electromagnetic suction, magnetic suction and door sensor.

When the printing chamber is heated, its stainless steel Build Plate and side plates are hot. Please do not touch them to avoid scalding.

The four leveling knobs under the hotbed can be used to manually level the printing platform.

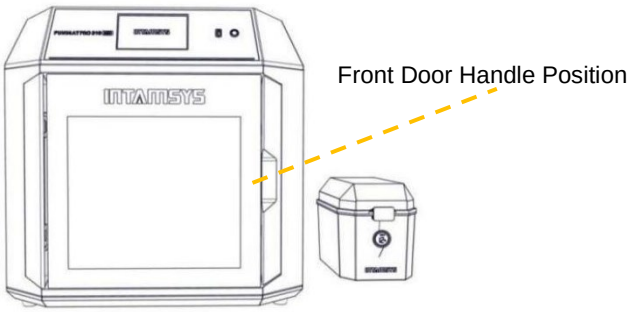

Fig. 3.5 Schematic Diagram of Front Door Opening Mode

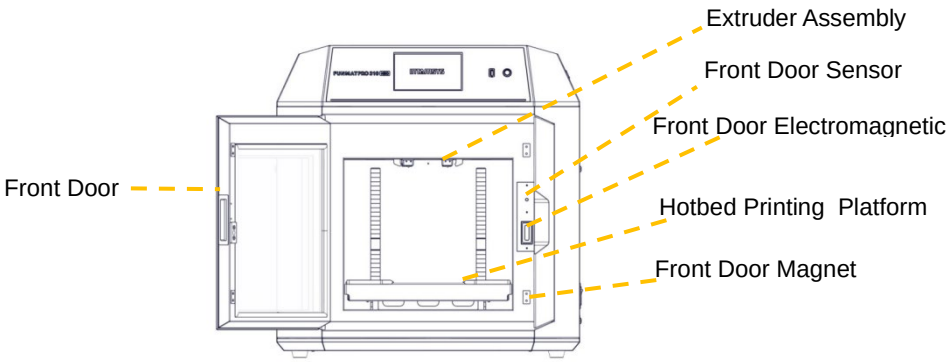

Fig. 3.6 Printing Chamber

3.4 Print Head Assembly

The print head assembly is used to melt the filament and form a desired model on the printing buildplate in combination with the movement of X-axis, Y-axis and Z-axis. A machine contains two separate print heads, generally the left extruder for printing model material and the right extruder for printing support material. Generally, there's only one extruder performing printing at the same time point, while the other extruder stands by at the end of X-axis. When copying or mirror printing is carried out, the two extruders move simultaneously.

Refer to Chapter 4 for loading and unloading of materials.

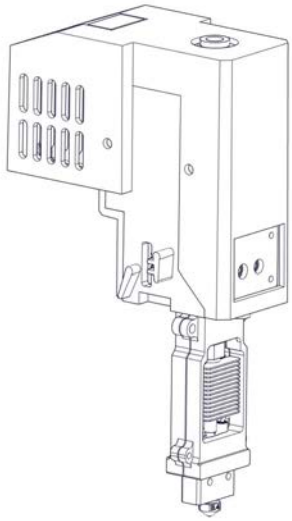

Fig. 3.7 Extruder Assembly

3.5 X-axis and Y-axis Components

X-axis and Y-axis components drive the double-extruder to move within the XY plane according to commands.

X-axis and Y-axis are driven by the synchronous belts, whose tension has been properly adjusted at factory and does not need to be re-adjusted during use. After a period of use, if the printing quality is found to have degraded significantly, the likely cause is the synchronous belts becoming loose due to various reasons. In this case, remove the left and right lateral plates of the printer and check the tension of the left and right synchronous belts of Y-axis; After removing the rear housing, you can adjust the tension of the Y-axis synchronous belt. Open the top door to see and check the tension of the synchronous belt of X-axis. If the tension of a synchronous belt is found too small, you can increase the tension using the method shown in the figure below. The left and right synchronous belts of Y-axis shall keep a consistent tension.

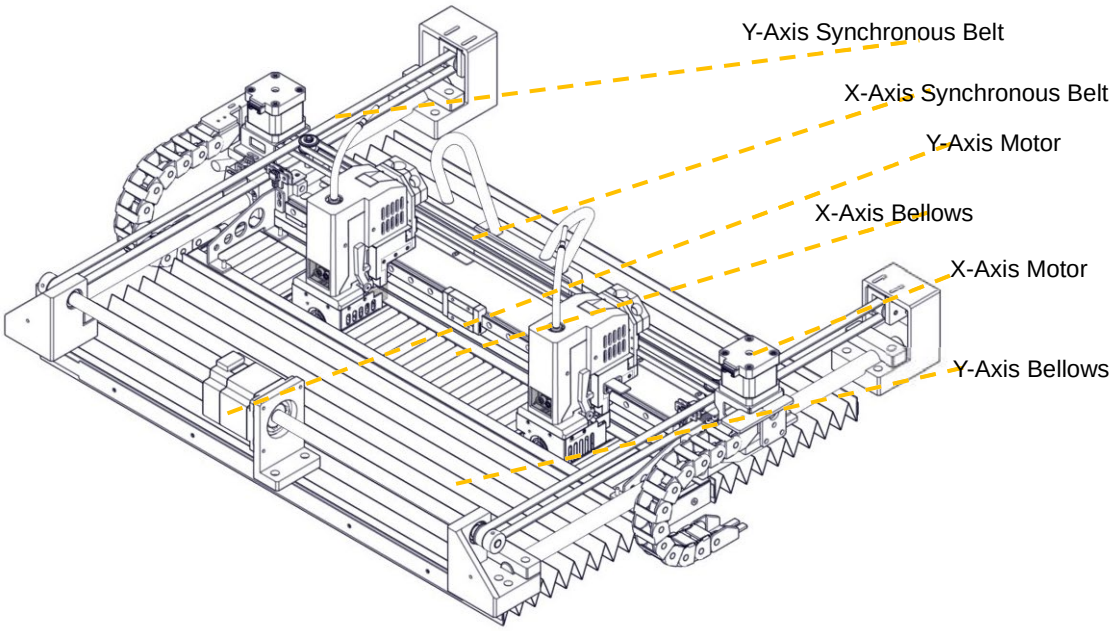

Fig. 3.8 X-axis and Y-axis Components

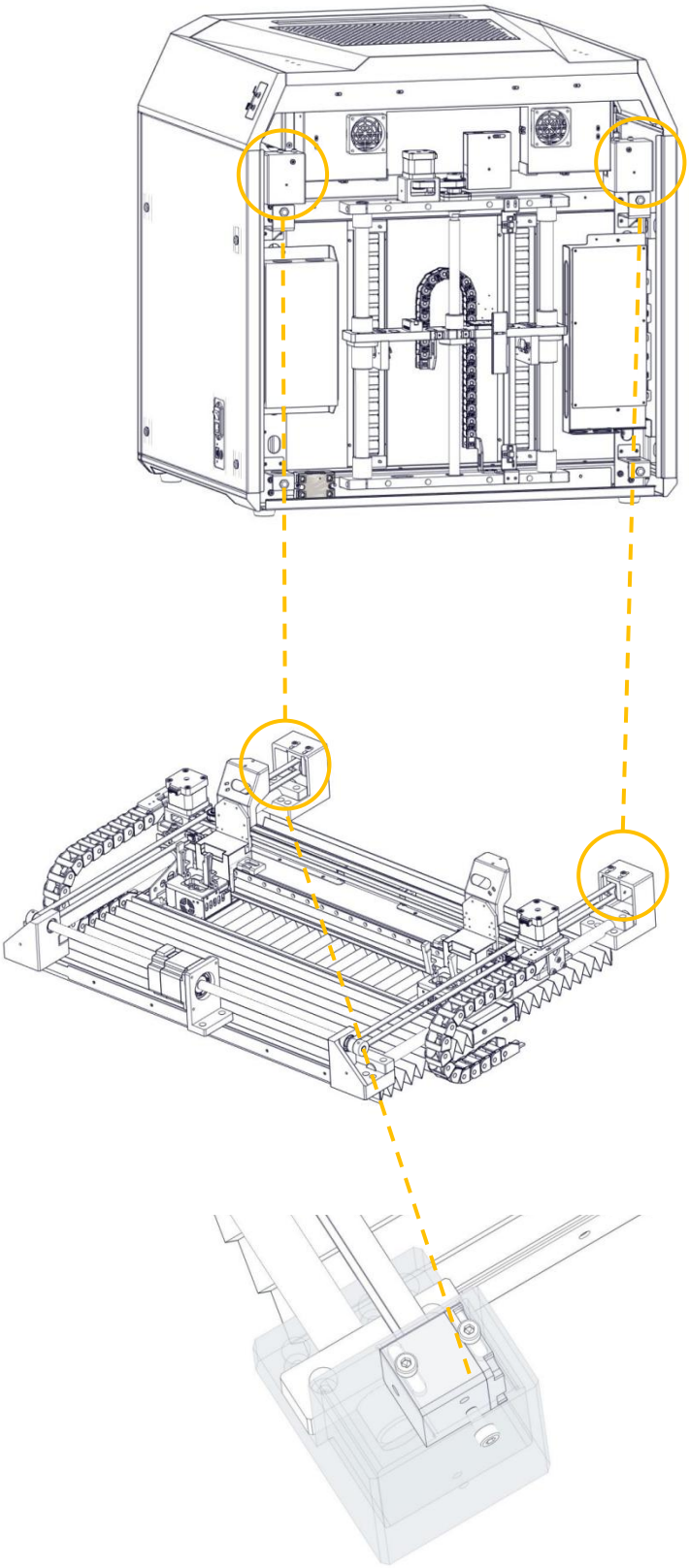

Fig. 3.9 Tension Adjustment of Y-axis Synchronous Belt

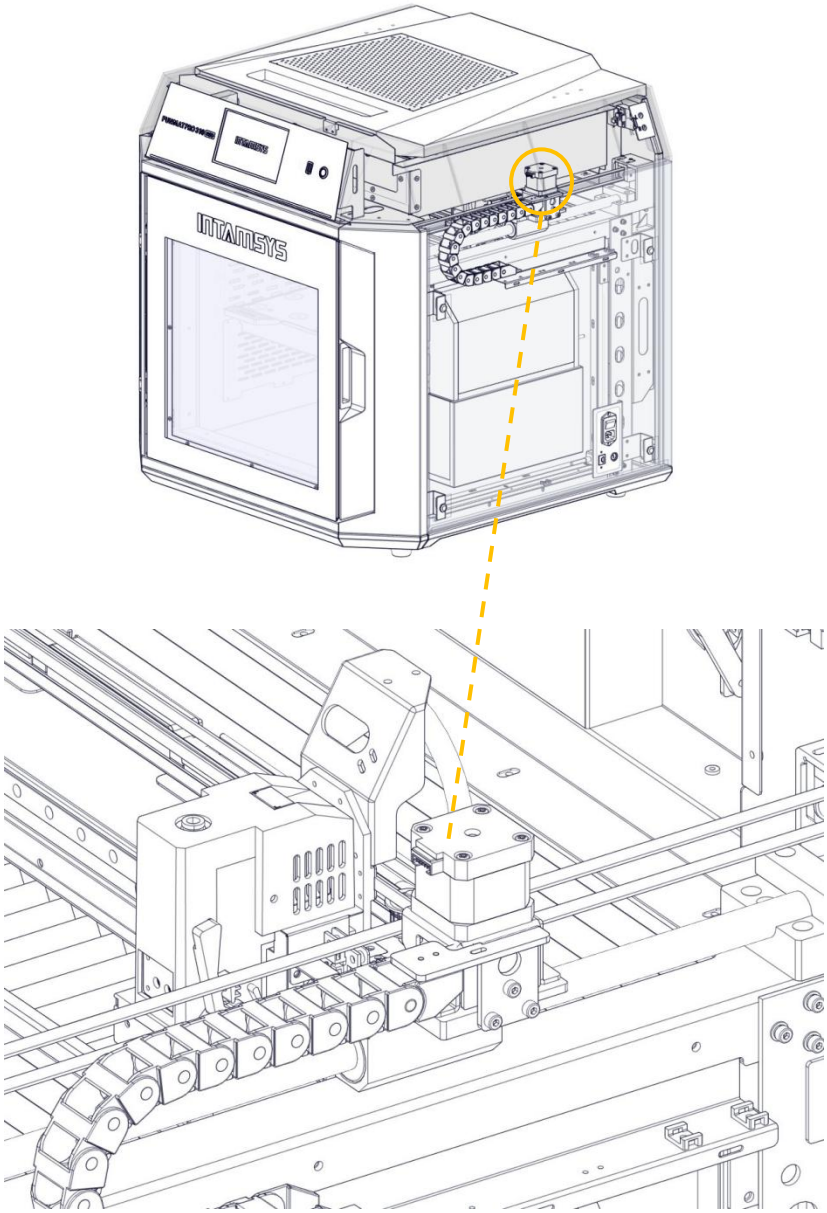

Fig. 3.10 Tension Adjustment of X-axis Synchronous Belt

3.6 Z-axis Components

The Z-axis components drive the hotbed to move up and down. Remove the back lateral plate to maintain the Z-axis components when necessary.

The trigger plate of the photoelectric sensor is already in place and generally does not need to be adjusted by the user. Only when problems are encountered with manual leveling of the hotbed may it be necessary for the user to check and adjust the trigger plate position appropriately. Adjusting the trigger plate of the photoelectric sensor upward enables the zero position of the hotbed to move downward, and adjusting the trigger plate of the

photoelectric sensor downward enables the zero position of the hotbed to move upward.

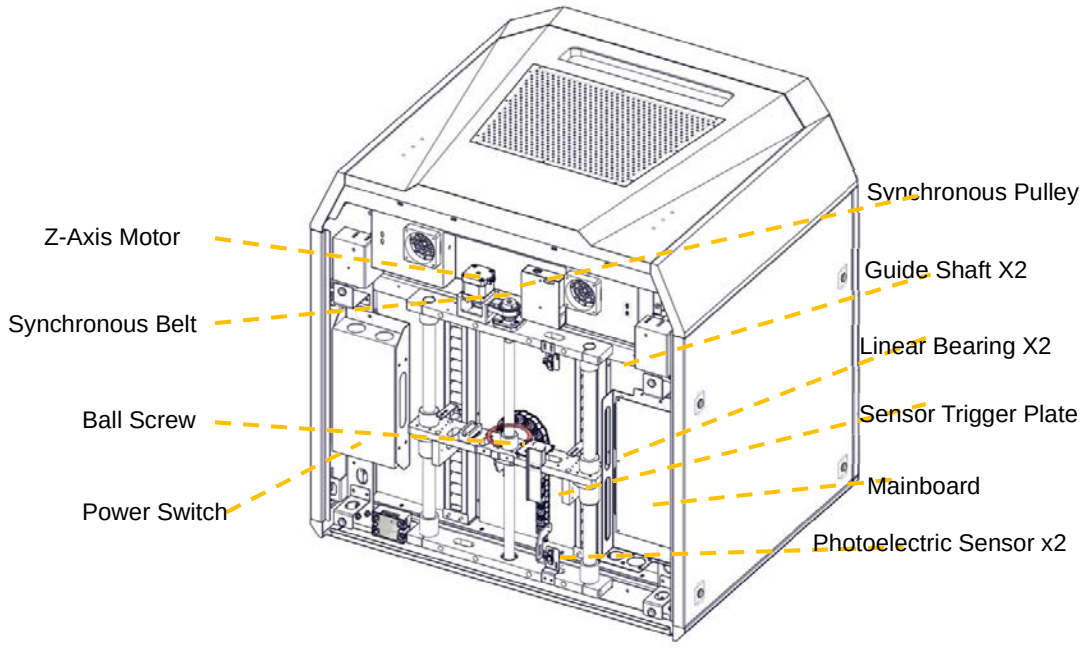

Fig. 3.11 Z-axis Components

3.7 Hotbed Components

The hotbed components consist of printing build plate, high-temperature resistant magnet, leveling sensor, coaming and heating film. The printing build plate of the printer is a magnetic build plate, and 18 high-temperature resistant magnets are installed on the hotbed substrate, which can adsorb the printing build plate to the hotbed substrate in a flat and firm manner. Four leveling sensors are installed at the bottom of the hotbed to sense the distance between the nozzle and hotbed for automatic leveling. At the same time, the hotbed substrate has four leveling screws. Manually level these screws according to the guidance of the operation interface when necessary.

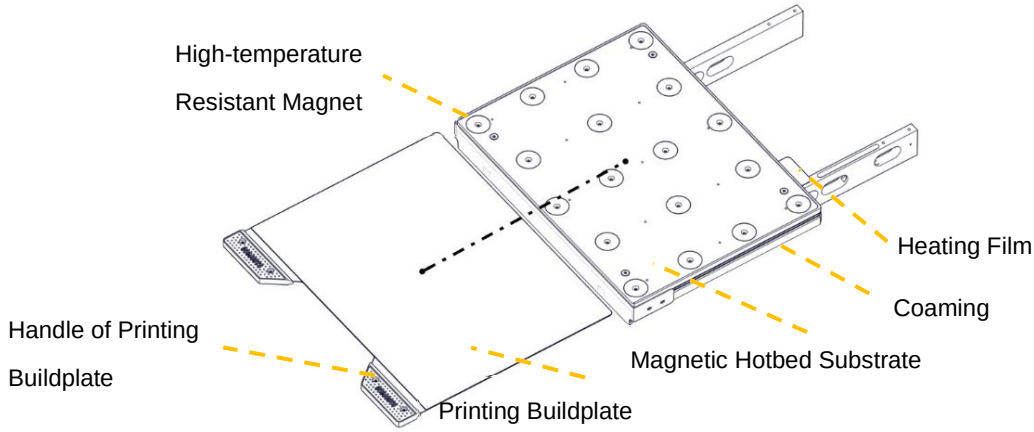

Fig. 3.12 Hotbed Components

3.8 Independent Filament Box

The printer is supplied with an Independent filament box (INTAMBox) that can hold up to two rolls of 1 kg material. Seal rings and buckles are provided around the filament box to ensure its sealing performance. The filament box is supplied with a drying box filled with 4A molecular sieve desiccant, which can ensure the low humidity environment inside the filament box. The upper cover of the filament box is equipped with a charging tray tension device to ensure that the printing wire rod will not be loosen during printing and that the wire coil will not topple when the wire rod in the wire coil is used up. Please refer to the *Operation Manual of INTAMBox* for details.

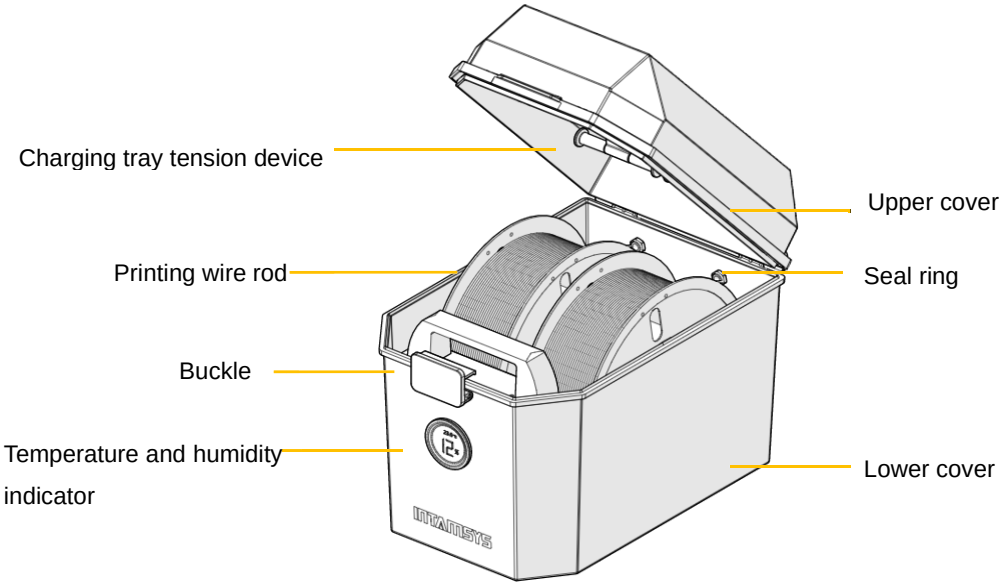

Fig. 3.13 Schematic Diagram of Independent Filament Box

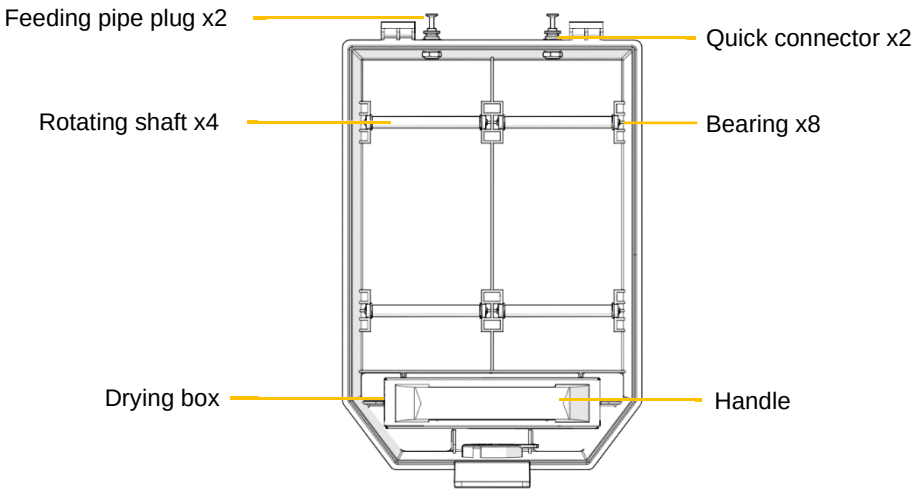

Fig. 3.14 Top View of Independent Filament Box

4 User Interface

4.1 Overview

This chapter describes the main user interface (UI) of FUNMAT PRO 310 NEO. For the specific printer operation information and programs, you can refer to Chapter 5. The printer must be powered on before using the touch screen.

FUNMAT PRO 310 NEO user interface consists of a touch screen located in the middle of the front side of the printer. The main interface of the touch screen includes three main functional areas: status bar, navigation bar and display area.

Fig. 4.1 Overview of User Interface

The status bar is docked to the top of the touch screen display. On the status bar, in addition to viewing Wi-Fi, U-disk and network status, you can also view alarm information. The navigation bar is on the right side of the panel, where you can access main functions through corresponding commands.

In the display area, you can select the G-code file to be printed, start/pause/stop printing, and preview the printing status on the model picture.

4.1.1 Status Bar

The status bar is docked to the top of the touch screen display and appears on each page of the user interface. It displays various information including network status indicators and USB flash memory.

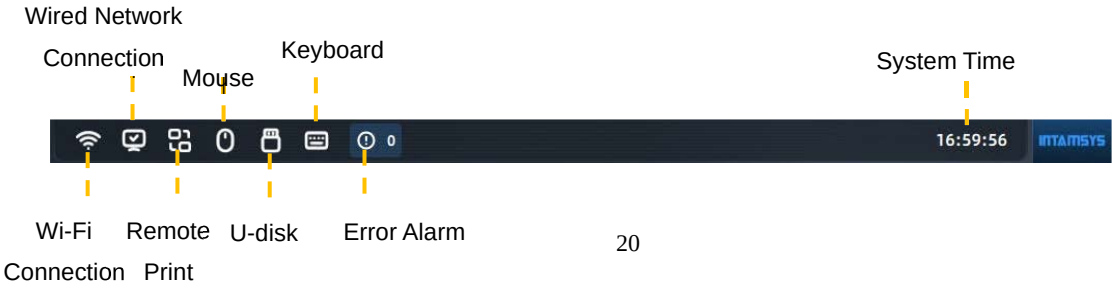

Fig. 4.2 Status Bar

4.1.2 Navigation Bar

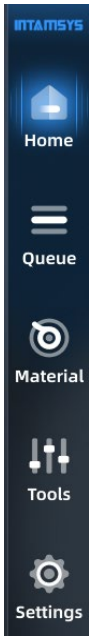

Fig. 4.3 Navigation Bar

You can perform the following operations through the navigation bar on the screen.

Homepage: Printing operation, preheating and heat preservation settings, model graphic progress display, real-time status display, etc.

Queue: You can manage G-code/print file import and print order, and engineers can manage their daily work tasks in the queue.

Material: You can carry out material selection, loading and unloading, material database management and other materials-related operations in this interface.

Tools: In this interface, you can control each moving axis of the printer and nozzle extrusion operation, as well as print calibration and parameter setting related operations.

Settings: You can view system parameters and make relevant system settings.

4.1.3 Display Area

The display area displays the related information corresponding to the selected function module, including operation buttons, texts, images, or schematic GIF, etc.

After the machine is powered on and started, it will automatically enter the main interface. When you select a function button in the navigation bar, the display area switches to the corresponding interface.

If there is no screen operation for 10 minutes, the system will automatically call the

Screen Saver (the screen protecting time can be set in the Settings interface). Touch the screen again to return to the main interface.

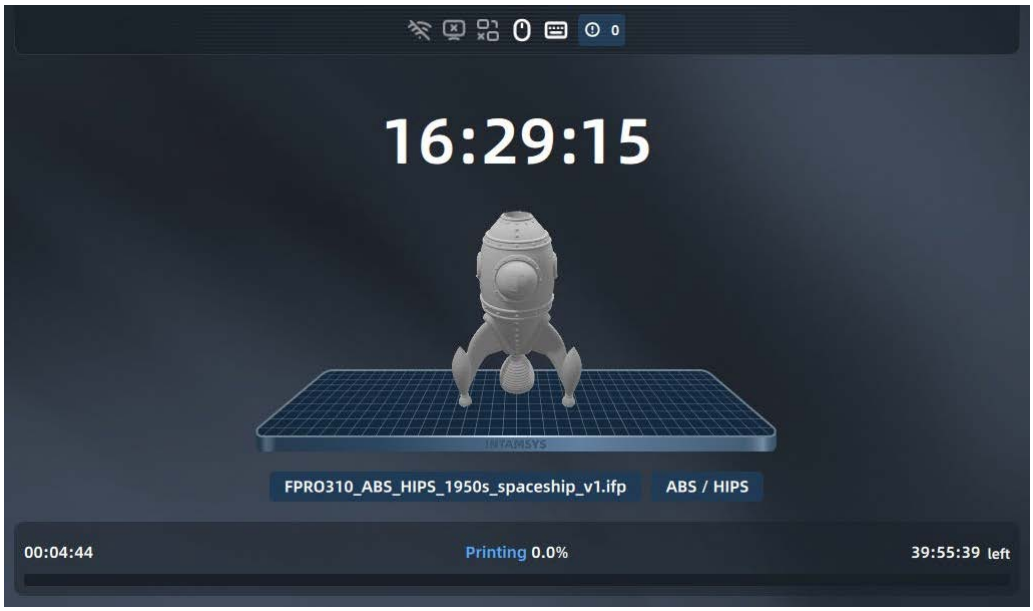

Fig. 4.4 Screensaver Interface

4.2 Main Interface

The homepage interface mainly displays the overall information of the device during printing. The left area includes model print progress preview and print operation buttons, which are used to start/pause/stop printing.

The real-time temperature status of the printer is displayed in the right area, including heat preservation time, L-nozzle temperature, R-nozzle temperature, chamber temperature and hotbed temperature.

The current connection status of the device is displayed by the icon on the top. If an error alarm occurs during printing, it will also be displayed in this bar.

Touch the screen to view and operate other functions displayed on the main interface.

Fig. 4.5 Main Interface

4.2.1 Load Print Files

FUNMAT PRO 310 NEO provides two methods to load :USB and Local Storage.

Click to select the file acquisition method, and find the print file by reading USB storage or printer local storage. Files sent remotely through FTP and slice software can be viewed in the local storage. You can choose to click "Print" to load the print file for immediate printing, or click "Add to Queue" to load the file into the queue for subsequent printing.

Fig. 4.5 Storage Mode

The print file format can be .gcode or .ifp. For .ifp format file. You can preview the model shape and the print progress can be displayed during printing.

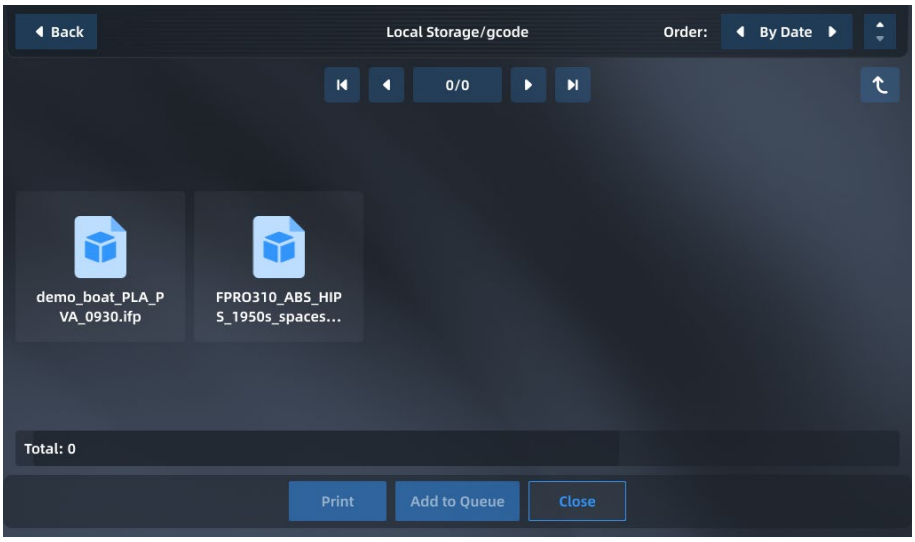

Fig. 4.6 Loading Print Files

4.2.2 Main Status Area

The main status area can display model pictures and show print progress by filling color. The model is completely filled to indicate that the print job is complete. If the model cannot be displayed, the system will display a default image. The file name and materials required for printing are displayed below the model picture.

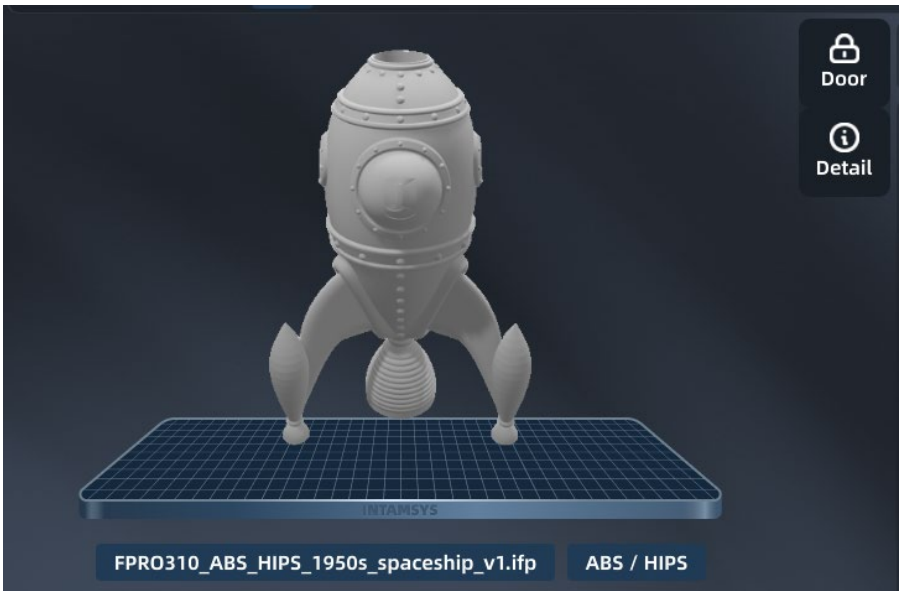

Fig. 4.7 Print Preview Interface

There are two shortcut buttons in the upper right corner that let you lock and unlock the front door and top door and view details related to print files.

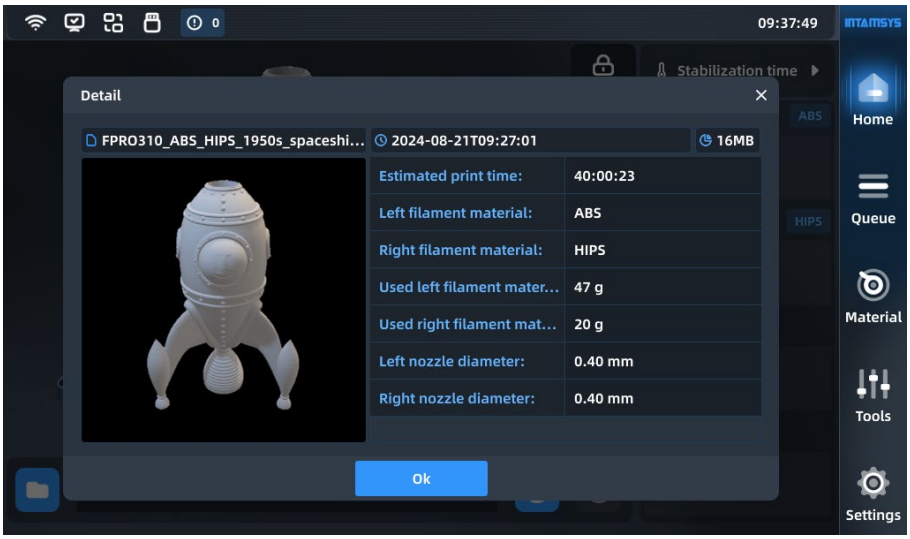

Fig. 4.8 Details Interface

4.2.3 Auxiliary Status Area

The auxiliary status area displays the temperature of L-Nozzle, R-Nozzle, chamber and

hotbed. The current temperature is displayed on the left, and the target temperature is displayed on the right. The arrow icon and fill color animation indicate the progress of heating/cooling, and it will be fully filled with the color if the target temperature is reached. The loaded material is displayed on the right side of the nozzle temperature, and you can quickly know the model number of the material installed in the material box.

Fig. 4.9 Auxiliary Status Bar

In order to obtain better printing quality, you can click the heat preservation time and set the preheating stabilization time of the chamber before printing and the heat preservation maintenance time of the chamber after printing. You can also disable it or adjust its duration as needed.

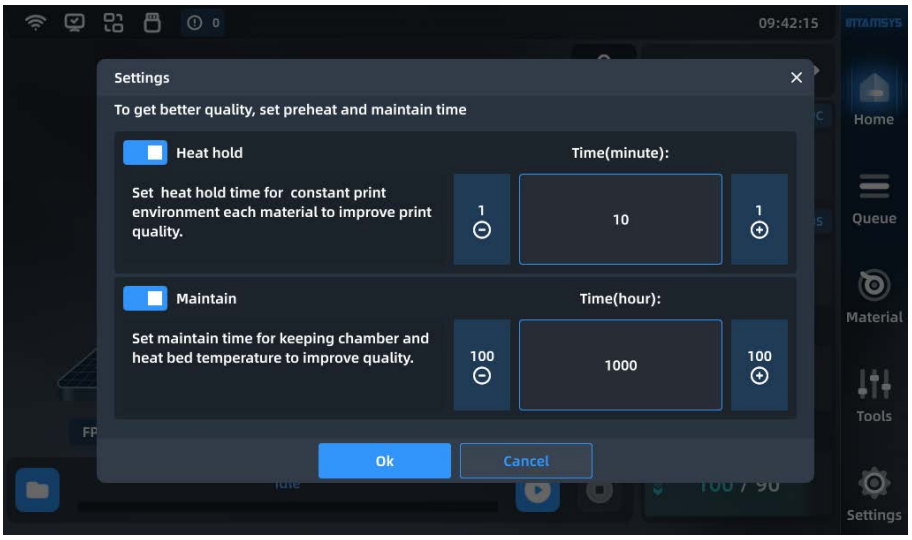

Fig. 4.10 Preheating and Heat Preservation Settings

4.2.4 Control Area

The bottom control area includes "Open" , "Start" and "Stop" buttons as well

as a progress bar to control or check the printing progress.

Click the "Open" button and enter the "File Navigation" interface to open the file.

The Start/Pause/Stop buttons are available during the printing phase.

Task progress and consumed/remaining time are shown on the progress bar.

When the print task is completed, a command to reprint or perform the next task in the queue will be displayed.

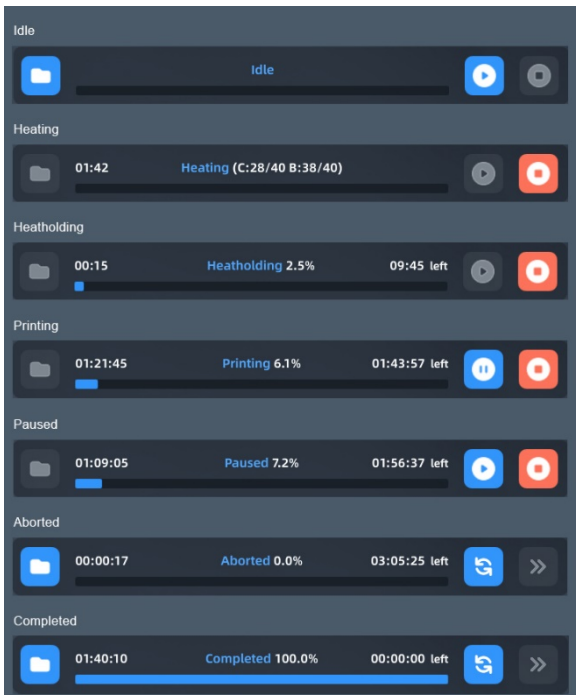

Fig. 4.11 Print Control

4.3 Queue

It includes sample queue and current queue.

In the sample queue, print sample files are provided for printer testing. The order of print files or samples cannot be modified in the sample queue.

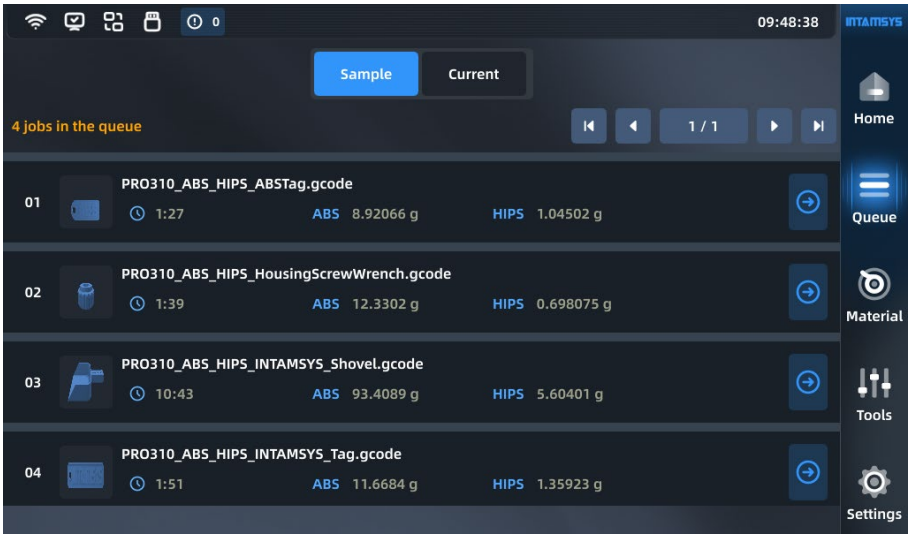

Fig. 4.12 Sample Queue

In the current queue, import and edit commands are provided in the upper right corner. You can add files or adjust the order of tasks.

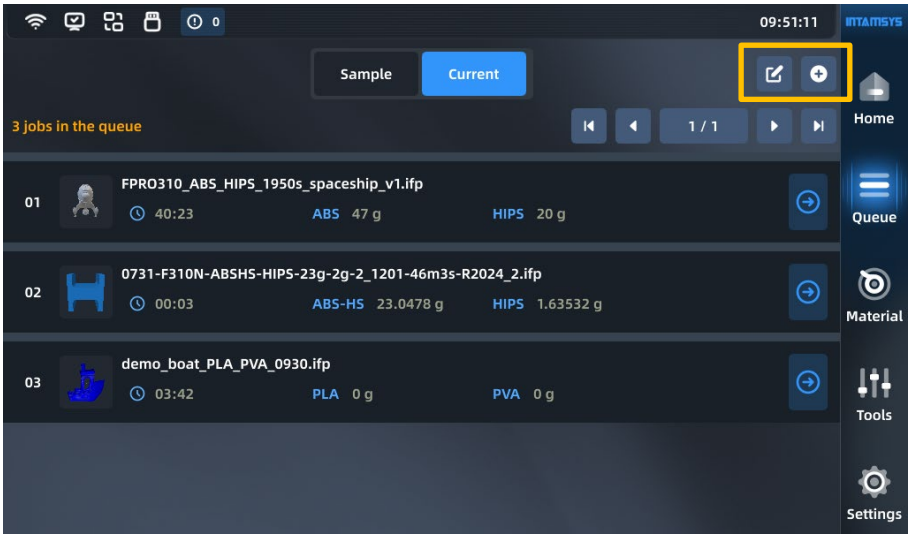

Fig. 4.13 Current Queue

Once the current task is completed in the queue, the next task will be automatically listed .

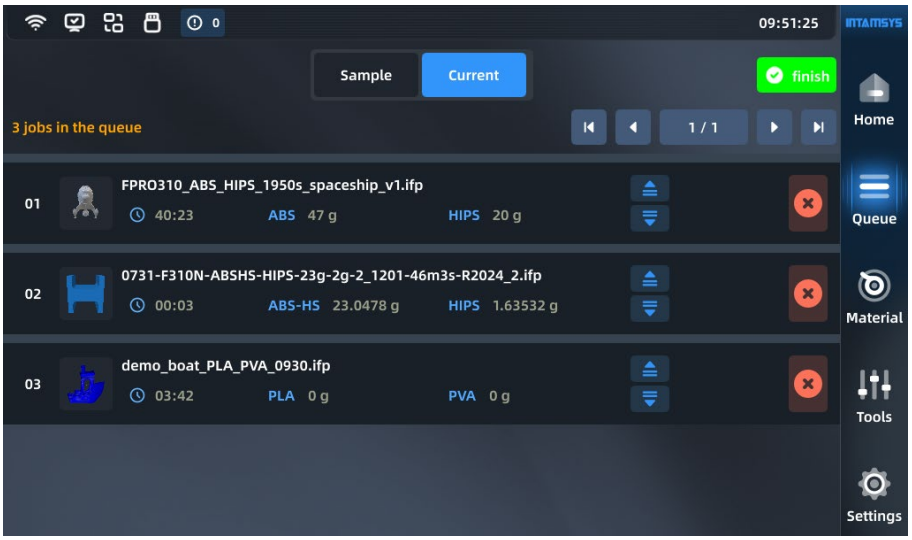

Fig. 4.14 Editing Current Queue

4.4 Material

You can carry out material setting, material loading and unloading, and material database management on the material interface.

Fig. 4.15 Material Interface

4.4.1 Material Selection

Pressing the material name list button will display INTAMSYS materials and user-defined materials. Materials that were used recently and frequently will be displayed at the top, where you can scroll down to select all available materials.

User-defined materials can be configured in the material database.

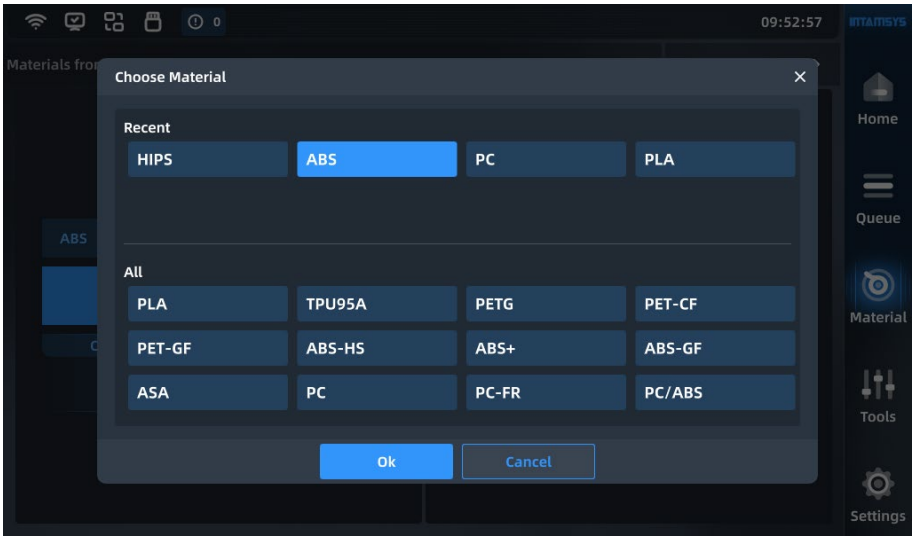

Fig. 4.16 Material Selection Interface

Specifically, if the material on the printer is inconsistent with the material settings in the G-code print file, it will alert the user to apply the material. Press "Apply", and the printer will automatically recognize and apply the correct material to the L-Nozzle and R-Nozzle.

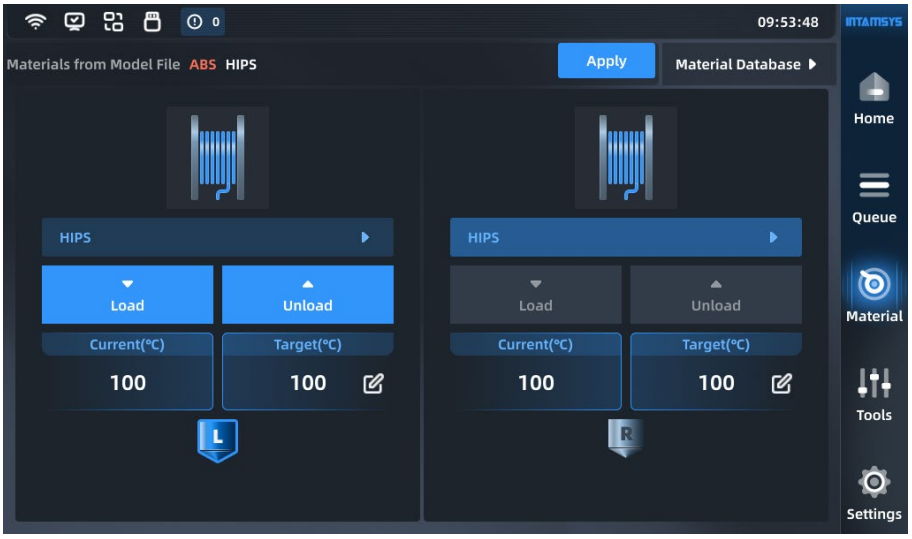

Fig. 4.17 Proofreading Print Materials

4.4.2 Material Loading

After preparing required materials, correctly select the name of the required materials in the material interface, and click the "Load" button to automatically heat the nozzle to the target temperature and perform operations according to the prompts on the right side. Click the "Load" button again or other blank area to exit the loading process.

After getting familiar with the operation, the user can close the prompt window, which will be folded, and open it again if necessary.

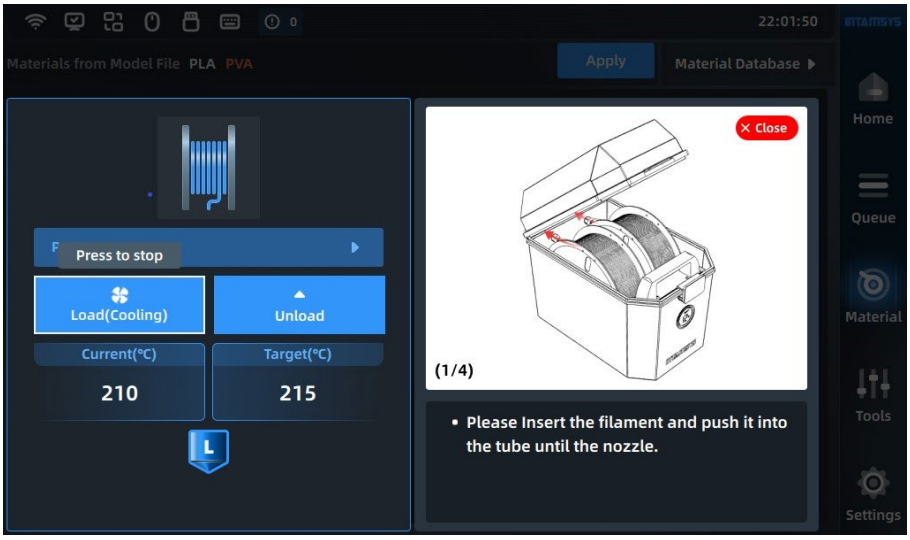

Fig. 4.18 Material Loading Interface

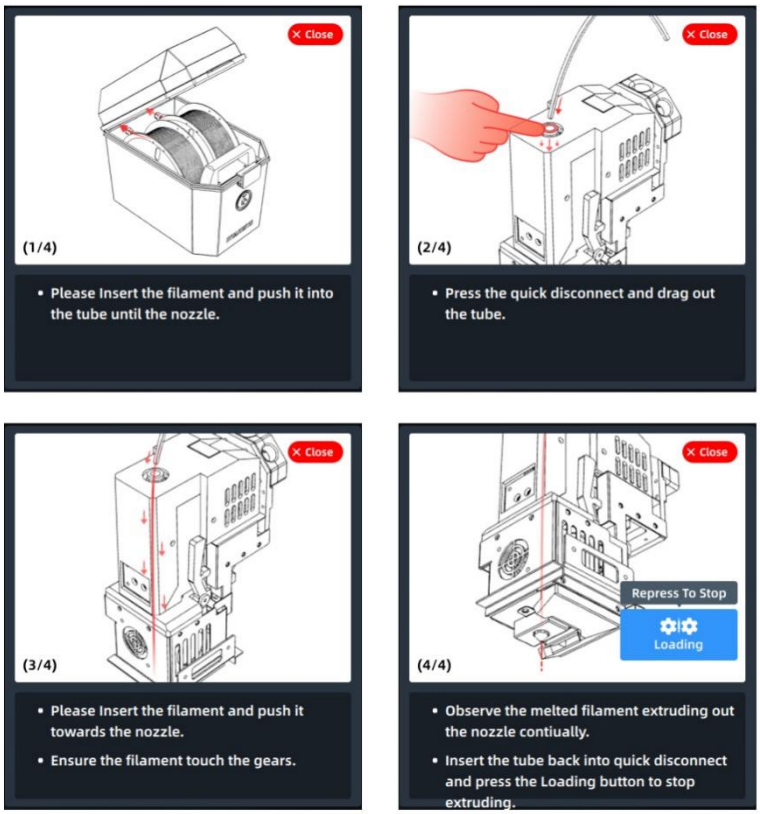

Fig. 4.19 Material Loading Process

4.4.3 Material Unloading

The material unloading process is similar to loading. Press the "Unload" button and unload the filament step by step according to the wizard tips.

NOTE: First feed and then unload the filament to prevent the materials in the nozzle from carbonizing.

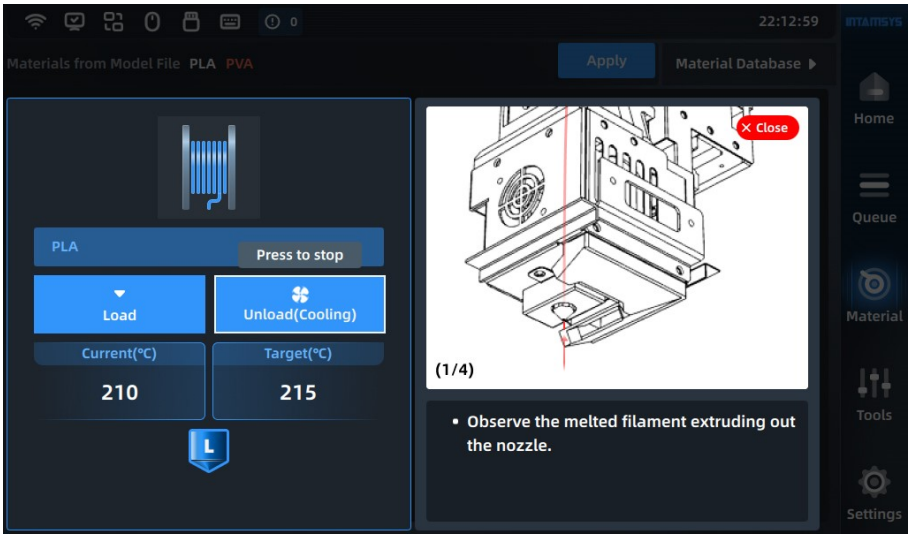

Fig. 4.20 Material Unloading Interface

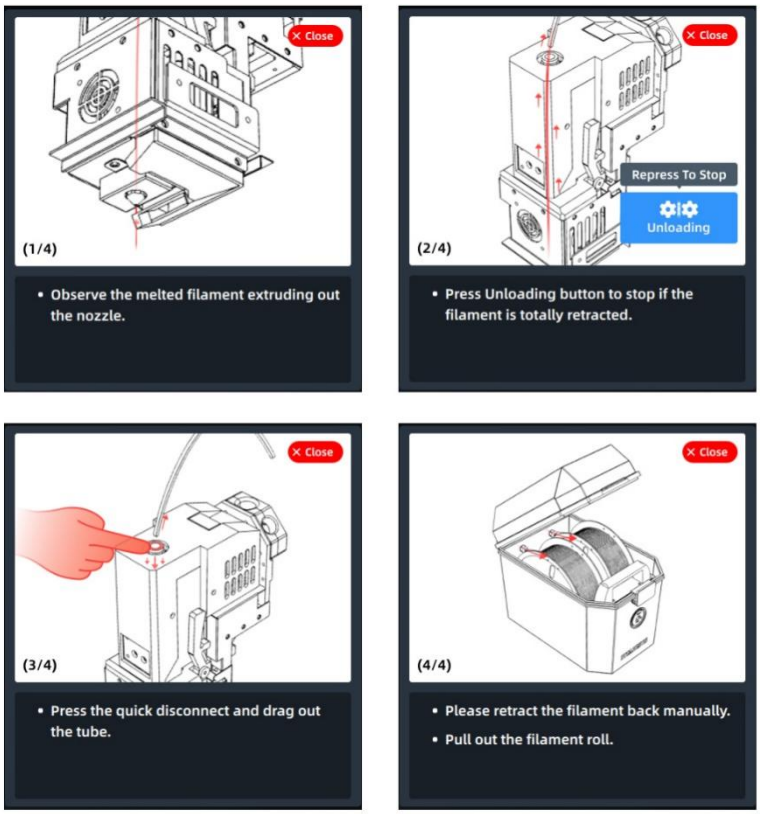

Fig. 4.21 Material Unloading Process

4.4.4 Supply Material after Out-of-material Alarm

The printer provides the out-of-material alarm function. When the filament runs out, the printer will pause while an alarm code prompting you to change the material will pop up on the screen.

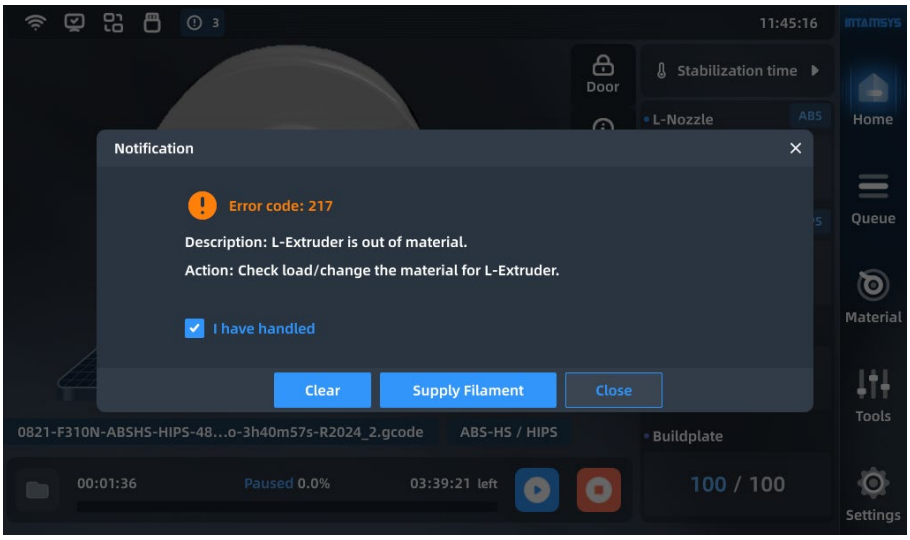

Fig. 4.22 Out-of-material Alarm Interface

Click the "Supply Filament" button on the screen, and then change the material according to the prompts on the screen. The procedure is as follows:

1. Unload old filament with reference to section 4.4.3 "Material Unloading".
2. Load new filament with reference to section 4.4.2 "Material Loading".
3. After the filament is loaded, click the "Print" button on the screen to continue printing.

4.4.5 Material Database Management

Press "Material Database" in the upper right corner of the material interface to enter the material database to view the details of built-in material attributes. The built-in material attributes of INTAMSYS cannot be modified or deleted, but its copy can be generated by clicking . After parameter modification and setting are completed, the new material process parameters will be stored in the user-defined materials.

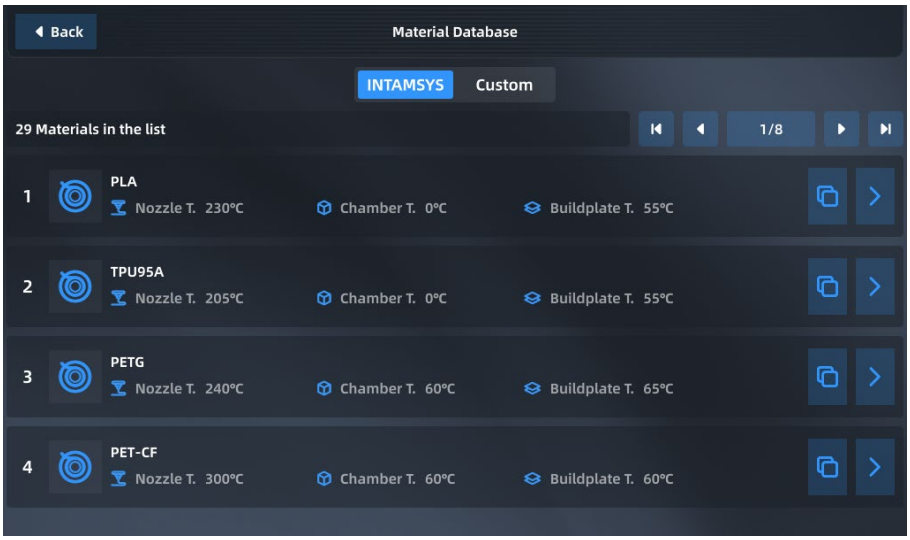

Fig. 4.23 Material Database

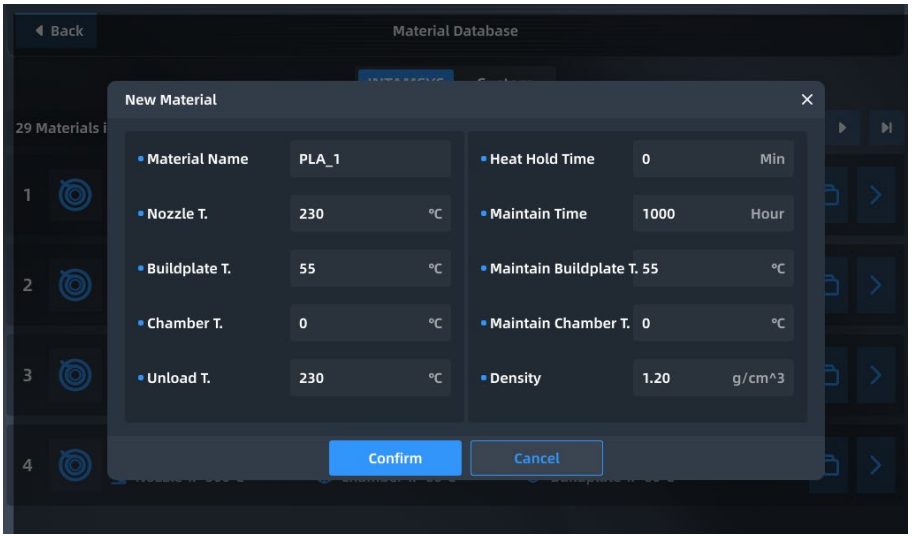

Fig. 4.24 Material Process Parameters

Note: These material process parameters are only used for printer operations except formal printing. Such operations include material loading, material unloading, leveling, XY

calibration, preheating, and heat preservation, etc. During formal printing, the printer will run the parameters of the loaded G-code command file, instead of the user-defined preset parameters in the printer.

In the user-defined interface, you can click to create a new material print process.

Enter corresponding parameters and click "Confirm" to save.

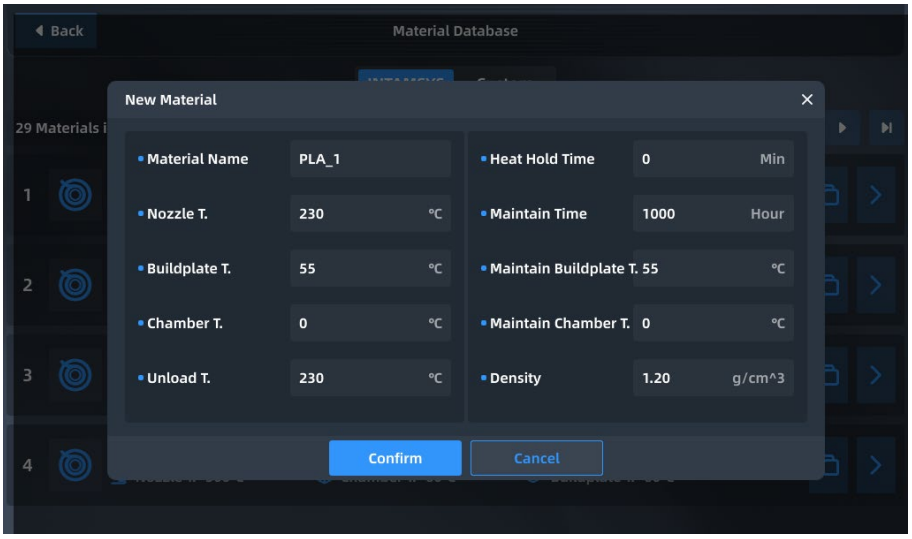

Fig. 4.25 New Material

Click to modify, copy or delete the existing material process parameters, and click "Confirm" to save the above operations.

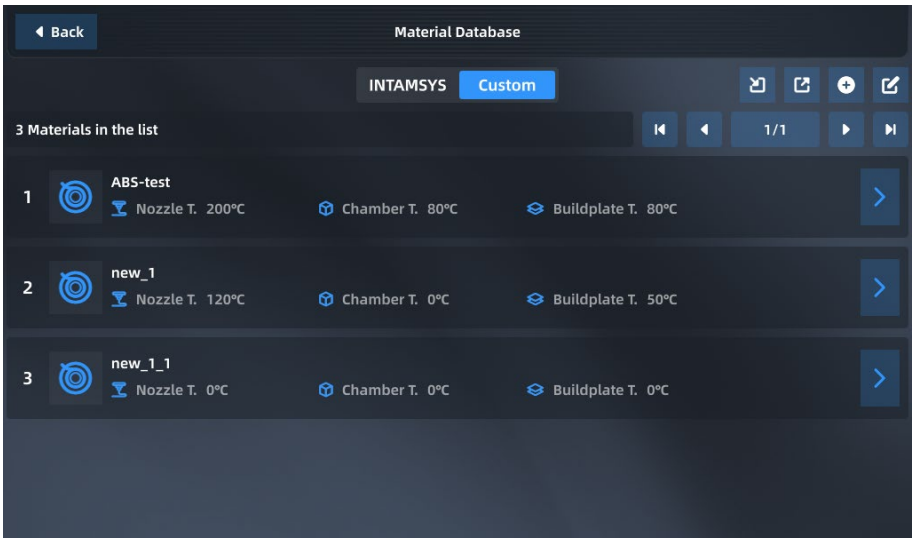

Fig. 4.26 User-defined Material Database

Click in the user-defined interface to export existing printing process parameters or import external parameters. Select the path to save or read parameters. It facilitates parameter transplantation.

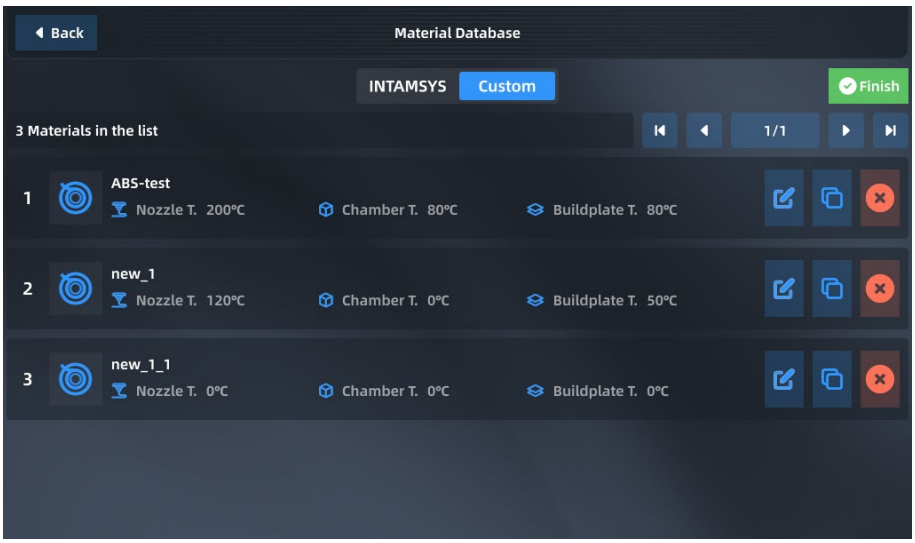

Fig. 4.27 Modification of User-defined Material Database

4.5 Tools

The Tools page is divided into three functional modules: Axis, Calibration and Tune . In the Axis interface, you can adjust the positions of the nozzle and hotbed. In the Calibration interface, you can perform printing buildplate leveling and XY offset. In the Tune interface, you can adjust the parameters during printing.

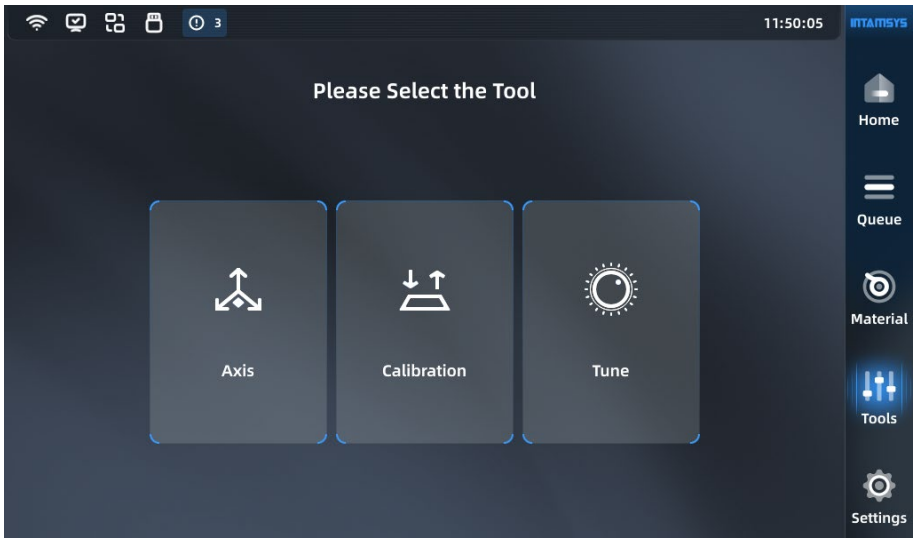

Fig. 4.28 Tools Interface

4.5.1 Axis

You can manually operate the position of the moving platform and printing nozzle in the Axis interface to control the material extrusion of the nozzle. Select the part to be operated at the top, click the arrow button at the bottom right to move the part, and adjust the moving step size. Click "Home" to return the corresponding part to its original position. The position of the part will be updated synchronously in the left preview image during operation.

You can also enter the absolute value of position directly at the top right to move the part.

Axis Control > Left Nozzle interface:

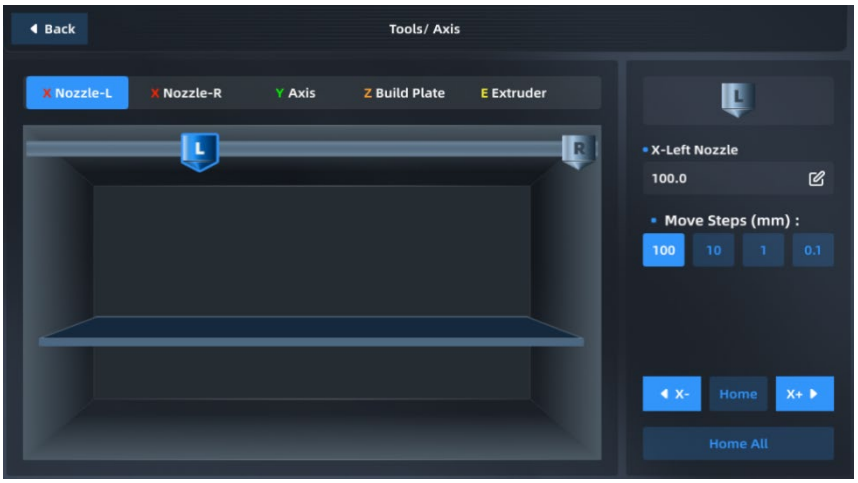

Fig. 4.29 Axis Control > Left Nozzle Interface

Axis Control > Right Nozzle interface:

Fig. 4.30 Axis Control > Right Nozzle Interface

Y-axis Control interface:

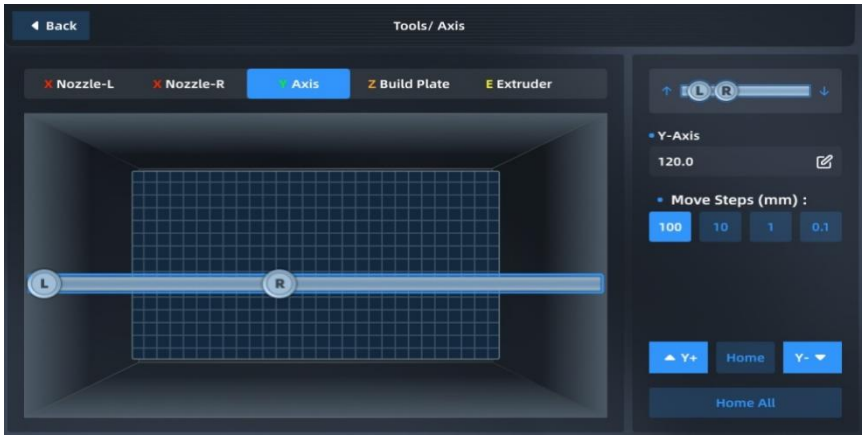

Fig. 4.31 Y-axis Control Interface

Z-hotbed interface:

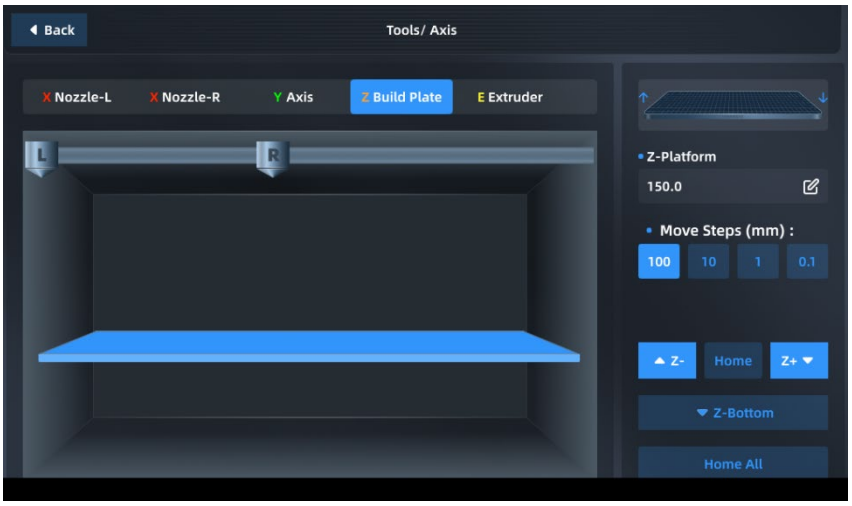

Fig. 4.32 Hotbed Interface

E extruder interface:

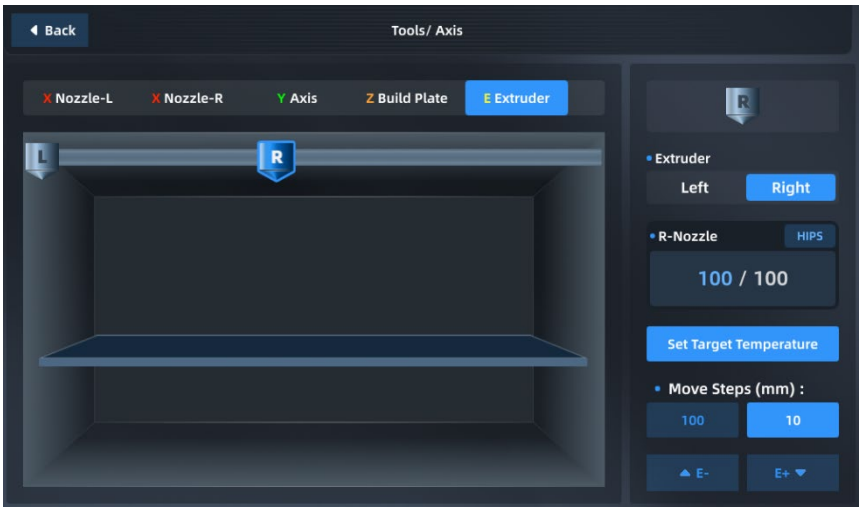

Fig. 4.33 E Extruder Interface

4.5.2 Calibration

Click the "Calibration" button in the Tools interface to enter the interface of printing buildplate leveling and Nozzle XY Offset.

Printing buildplate leveling: Use pressure sensors to automatically detect the distance between the nozzle and buildplate and the flatness of different positions of the buildplate .

Nozzle XY Offset: Compensate for nozzle XY by printing standard samples.

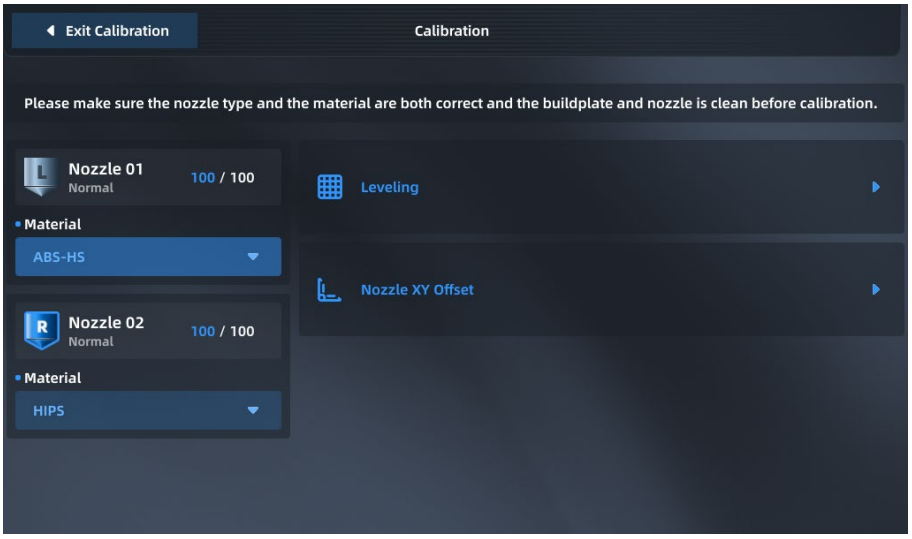

Fig. 4.34 Calibration Interface

You can choose to perform any one or several of these steps. When the printer is used for the first time, the calibration steps must be carried out in sequence. The following table guides you on how to selectively perform the steps after different operations. (● indicates this step is required, while — indicates this step is not required.)

Conditions	Step 1: Leveling	Step 2: Nozzle XY offset
After replacement of L-Nozzle	●	●
After replacement of R-Nozzle	●	●
After replacing with a new print head assembly	●	●
After replacing with a new printing buildplate	●	—
Leveling error	●	—
Nozzle XY Offset error	—	●

Table 6.1 Conditions for Leveling and Nozzle XY Offset

4.5.2.1Calibration of Automatic Printing Platform Leveling

1. After the leveling function is enabled, the nozzle is automatically heated to the material temperature. After the nozzle temperature reaches the material temperature, spitting occurs and then the nozzle automatically drops to 150°C.

Fig. 4.35 Heating the Nozzle

2. Clean the nozzle, and then check "I have done it" in the interface selection box.

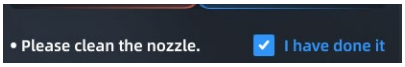

Fig. 4.36 Cleaning the Nozzle

3. After ticking "I have done it" in the interface selection box, the build plate is automatically heated to the required temperature for materials.

Fig. 4.37 Heating the Buildplate

4. After heating the buildplate, the interface automatically jumps to the automatic leveling interface. Select Simple (4*4) or Complete (10*10) mode for automatic leveling. By taking 100-point leveling as an example, click "Start Leveling", and the printer first performs a trigger test of the leveling sensor.

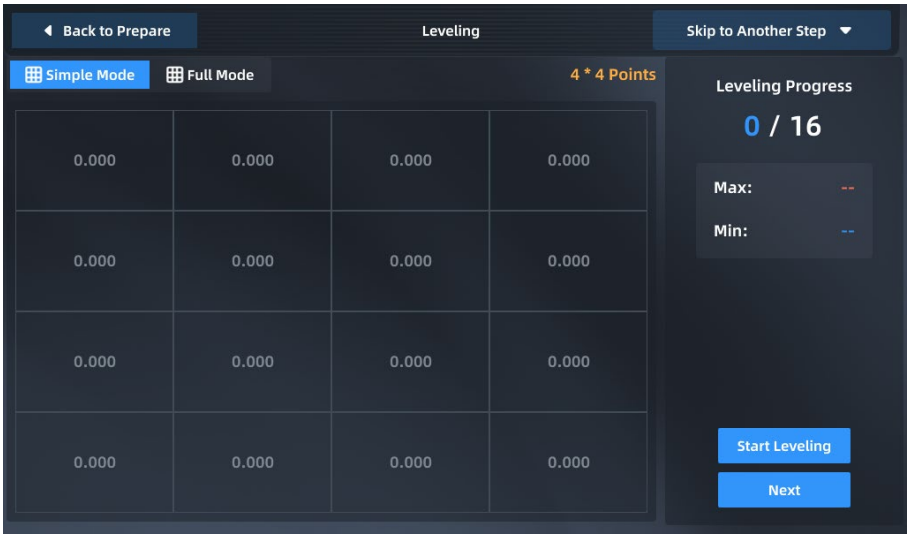

Fig. 4.38 4*4 Leveling Interface

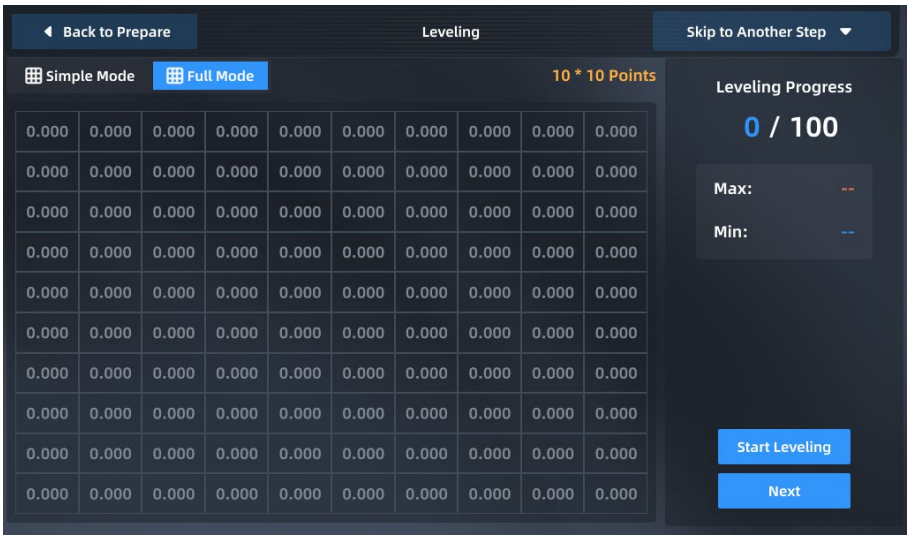

Fig. 4.39 10*10 Leveling Interface

5. After the leveling sensor test is passed, the extruder will move to the center position on the front side of the platform for datum point test.
6. After the datum point test, start the 100-point leveling test. The printer automatically performs multi-point position leveling and records the error value of each point.

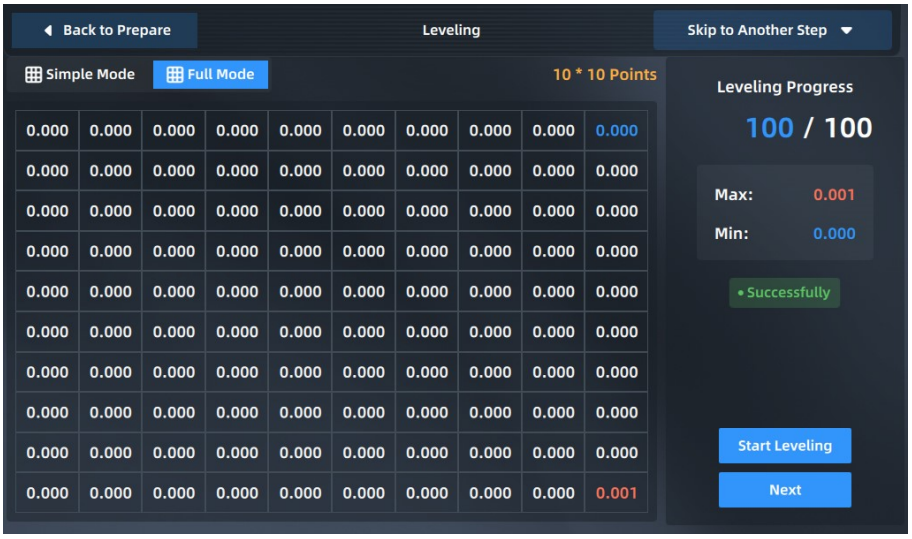

Fig. 4.40 100-point Leveling

7. After the leveling process, you can click "Next" to start printing if the leveling is successful. During printing, the Z-axis position of the platform will be automatically compensated according to the movement of the extruder.

   Note:

   - During the installation of the printing build plate before leveling, it shall be correctly adsorbed on the platform along the guide grooves on both sides of the platform base plate;
   - Clean the residual materials on the nozzle tip before leveling;
   - Clean the printing platform before leveling; no foreign matters shall be left;
   - Clean the chamber before leveling to prevent the platform being lowered from colliding with foreign matters;

The screen displays the maximum and minimum values of all measuring points for leveling on the right side. When the difference between the maximum and minimum values is over 0.5 mm, leveling failure is prompted to request you to perform manual leveling as guided in the figure (refer to section 4.6.6). After manual leveling, return to this interface to perform automatic leveling again.

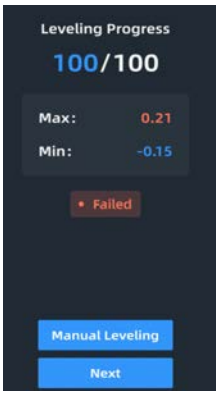

Fig. 4.41 Automatic Leveling Failed

If automatic leveling exits and an alarm is given due to sensor failure during leveling, it is

recommended to first perform manual leveling (refer to section 4.6.6), then manually conduct nozzle Z offset(refer to section 4.6.7), and finally disable the automatic leveling function in More Settings of the Settings interface before printing.

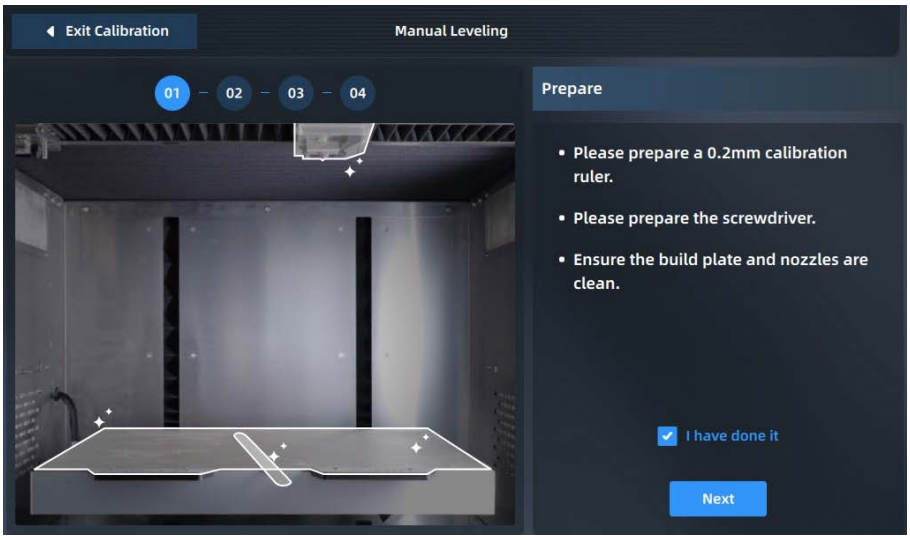

Fig. 4.42 Manual Leveling Calibration

4.5.2.2 Nozzle XY Offset

After automatic leveling or manual leveling and nozzle Z offset, start to conduct nozzle XY offset. Following the steps below, the machine reads XY offset of the L&R Nozzle through a printed scale for compensation during printing. Follow the prompts on the screen to complete the operation in turn.

1. Select nozzle XY Offset.

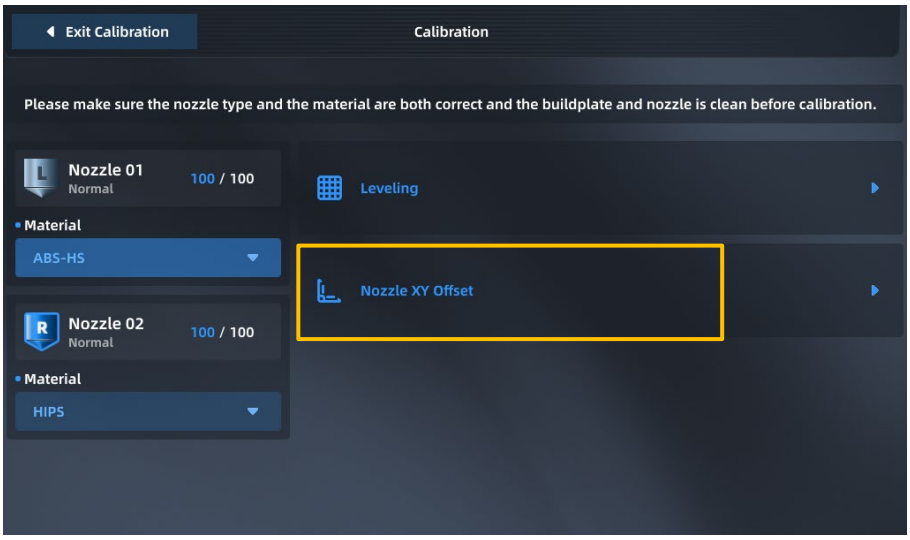

Fig. 4.43 Nozzle XY Offset Interface

2. Make pre-calibration preparations as prompted.

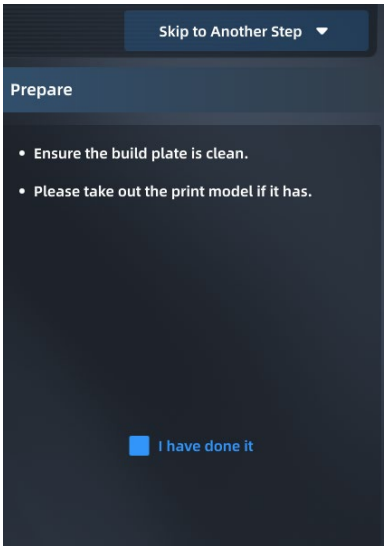

Fig. 4.44 Pre-calibration Preparation

3. Wait for the left and right nozzles and hotbed to be heated to the target temperature in sequence.

Fig. 4.45 Heating Nozzles

4. Start to print the calibration model, namely the scale.

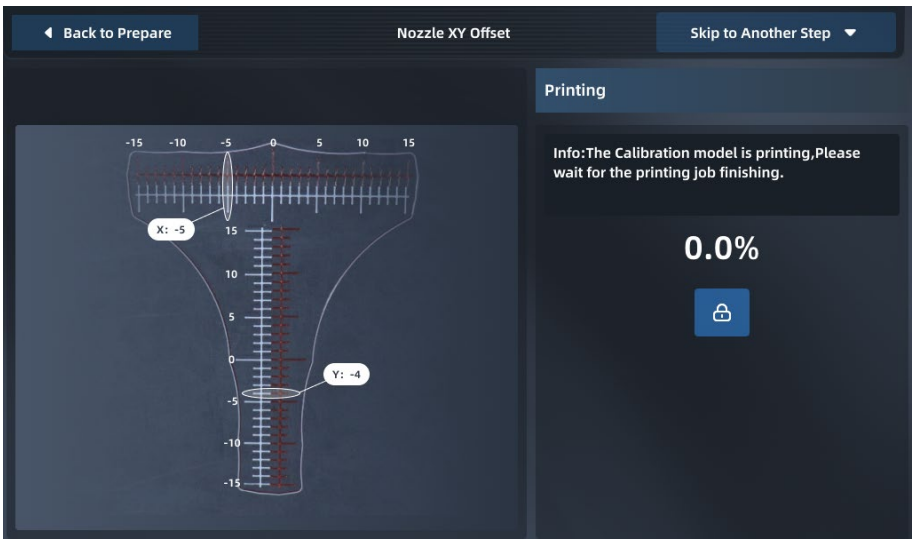

Fig. 4.46 Printing the Scale

5. After printing the scale, take out the printing Build Plate to read the scale to obtain X offset value and Y offset value respectively, and click "+"/"-" buttons to enter values.

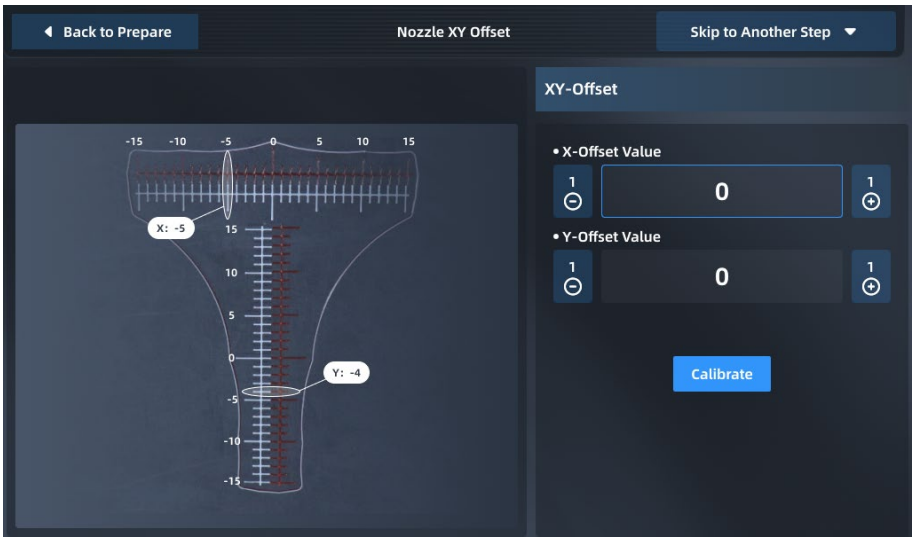

Fig. 4.47 Modifying L&R Nozzle XY Offset

The scale shall be read as follows:

① Read the scale of the model printed by the right extruder based on the model printed by the left extruder;

② First, read the X offset value to check whether the center line of the model printed by the right extruder is to the left or right of the center line of the model printed by the left extruder. Use the "-" value for the left and the "+" value for the right;

③ Then, read the Y offset value to check whether the center line of the model printed by the right extruder is above or below the center line of the model printed by the left extruder. Use the "-" value for below and the "+" value for above.

④ Find the scale line where the two models are most aligned, then count from the center line to this scale line and record the value as N.

⑤ Enter the "N" value into the input box.

For example, the figure below shows the scales printed during an XY offset. The X offset

value shall be "+6" and the Y offset value shall be "-5".

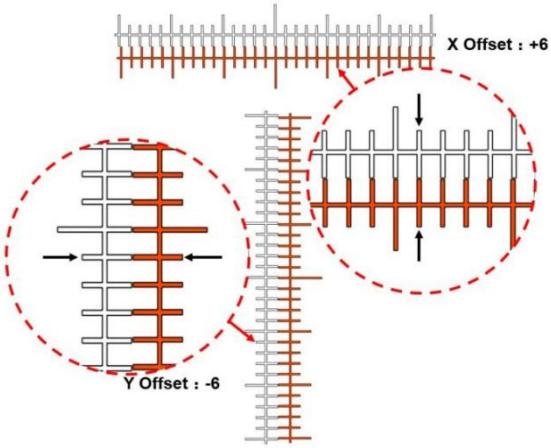

Fig. 4.48 Reading Method of XY Offset Scale

Note: The offset value 1 represents a scale, an actual deviation of 0.05 mm.

If it is found that the center lines for the horizontal or vertical print scale range are far apart and other scale lines are difficult to coincide with each other after reading the print scales, it means that the XY deviation has exceeded the measurable scale range (the maximum scale range is 15, that is, the deviation is 0.75mm). Take the following steps:

① First determine the offset direction "-"/"+" by observing the position of the center line of the model printed by the right extruder relative to the center line of the model printed by the left extruder.

② Set the offset to the maximum value, and click the "OK" button.

③ Perform XY offset again, print and test the models until a determined offset is read.

4.5.3 Tune

During printing, you can adjust the following parameters of the printer in the "Tune" interface: L-Nozzle T., R-Nozzle T., Chamber T., Hotbed T., Left Fan Speed, Right Fan Speed, Print Speed and Material Flow.

The steps are as follows:

Click the icon of the parameter to be adjusted to highlight it.

Change the parameter value by clicking "-"/"+" on the right or turning the knob below, and the exact value will be displayed in the box.

Click the "Apply" button to complete parameter setting.

Fig. 4.49 Parameter Settings Interface

4.6 Settings

The Settings interface is used for relevant settings of the system, including device information viewing, software update, networking setting and printer system parameter settings, etc.

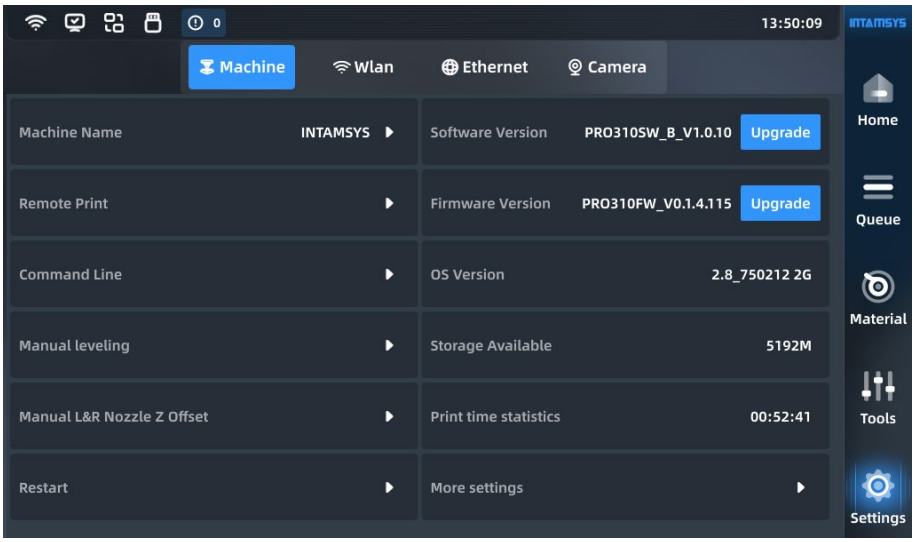

Fig. 4.50 Settings Interface

4.6.1 Device Information

You can set the printer on this page, including:

- Machine Name: Set the printer name with alphabetic characters, special characters, and numeric characters (ASCII code).
- Remote Print: Set the remote print mode
- Command Line: Input the control device through command line
- Manual Leveling: Try to adjust the printing platform through manual leveling when automatic leveling fails

- Manual L&R Nozzle Z Offset: Manually calibrate the height difference between left and right extruders.
- Restart: The device automatically restarts.
- Software Version: Display the current software version number. To update it, click the "Update" button on the right
- Firmware Version: Display the current firmware version number. To update it, click "Update" on the right
- OS Version: Display the current system version number.
- Storage Available: Display the available memory of the current machine.
- Print Time Statistics: Display the total print time of the current machine.
- More Settings: Including screen brightness adjustment, automatic screensaver time, language switching, automatic time setting and motor and material shortage detection enabling (screen or LED brightness adjustment, automatic screensaver time, Wi-Fi auto reconnection, automatic leveling/motor/material shortage detection/door detection enabling, language, date and time, and restore factory settings)

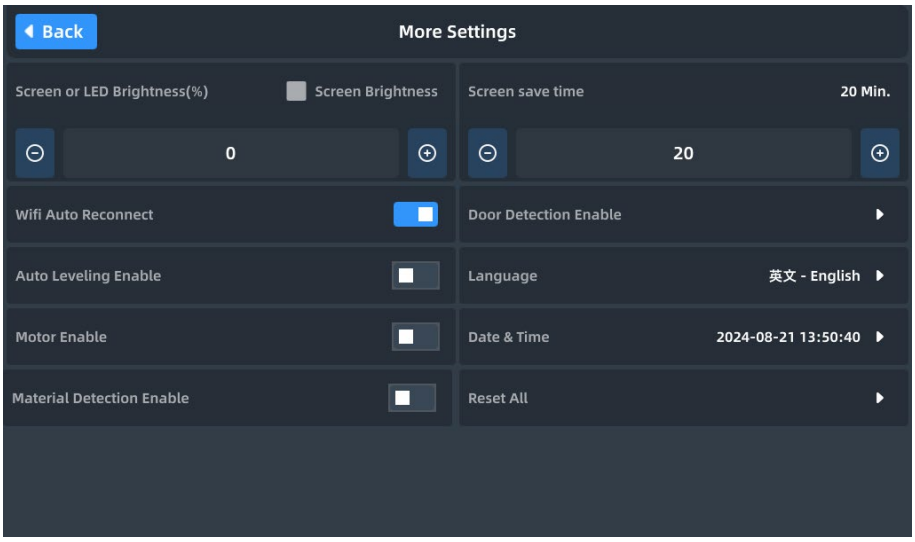

Fig. 4.51 More Settings

4.6.2 Remote Print

In the Device Information interface, click the "Remote Print" button to enable remote print, and connect the printer to the computer through the IP address to support remote sending and print of G-code files. (Refer to section 5.4.3.2 for details)

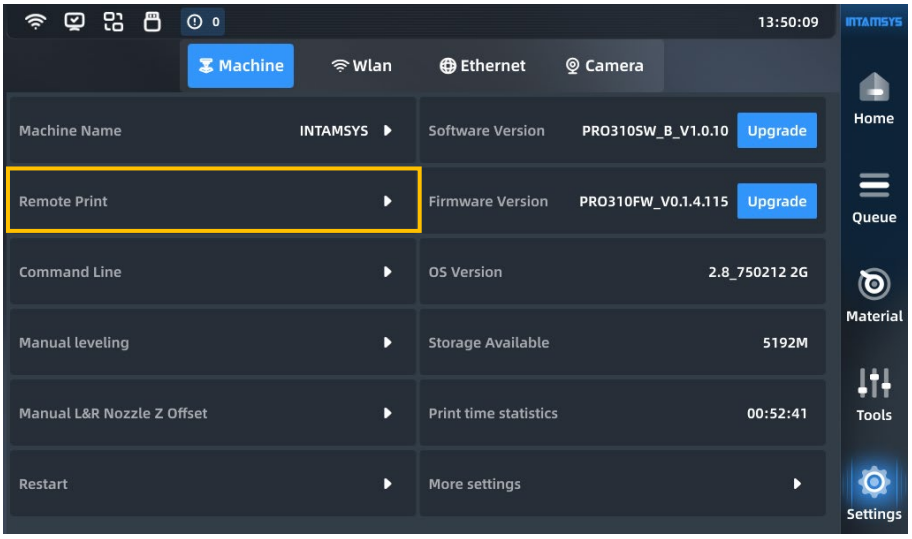

Fig. 4.52 Remote Print Settings

4.6.3 Camera Settings

Set the camera parameters, and you can preview the video here.

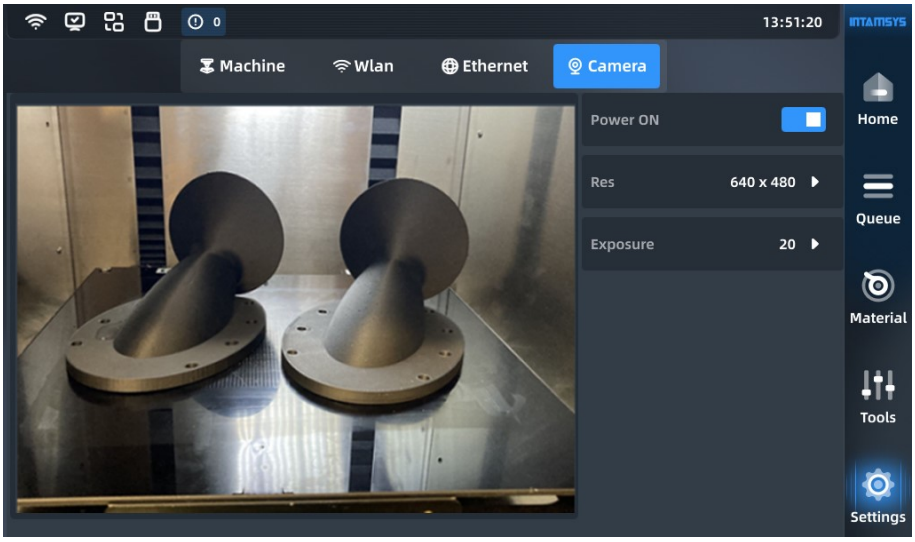

Fig. 4.53 Camera Settings

4.6.4 Motor Enabling

The "Motor Enable" switch is used to enable/disable X-axis motor, Y-axis motor, Z-axis motor, extruder motor, auxiliary feeding motor, etc.

Click "More Settings" in the Settings interface, and then click the button on the right side of the "Motor Enable" to turn it On/Off. Blue indicates "On".

"On" means that all motors are powered on and "Off" means that all motors are powered off. After it is disabled, you can push each motor to move freely for easy maintenance.

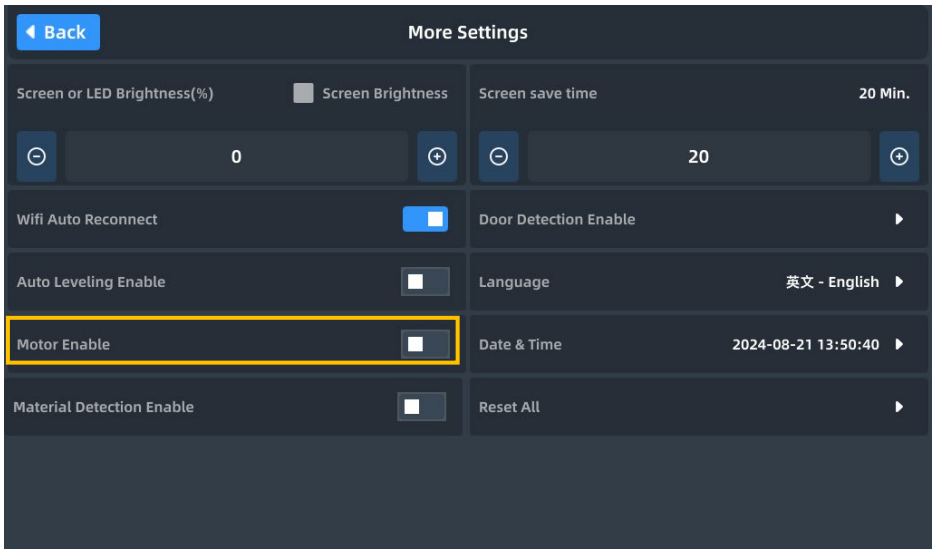

Fig. 4.54 Motor Control Interface

4.6.5 Automatic Screensaver Settings

Click "More Settings" under the Settings interface, and then click "Screen save time" to set the automatic screen save time to 10 min to 30 min in a step of 10 min.

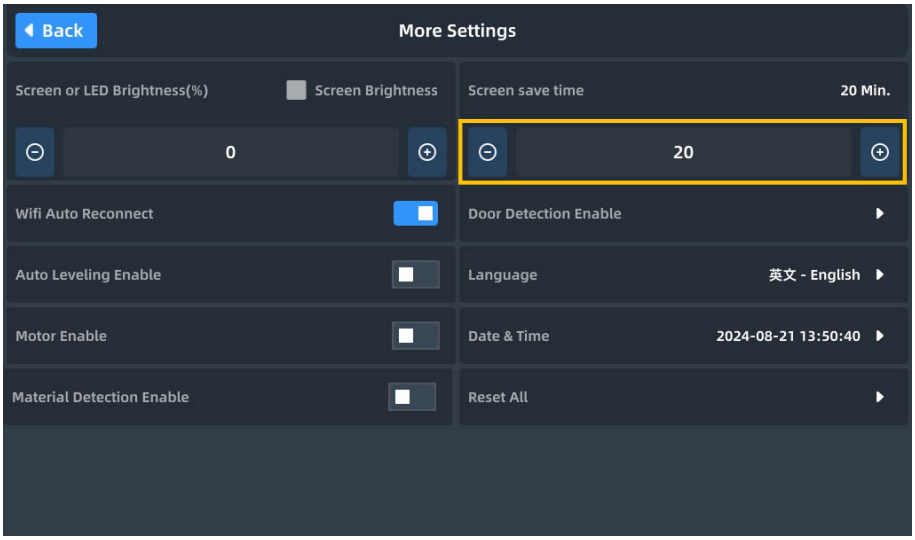

Fig. 4.55 Automatic Screensaver Time Settings Enabling Option

4.6.6 Manual Calibration of Printing Platform Leveling

For manual leveling, measure 4 points on the platform through a feeler gauge (thickness: 0.2 mm), while rotating the screws under the printing platform through an M8 screwdriver to keep the distance between nozzle tips of the 4 points and the hotbed platform consistent, so that the overall XY motion plane is parallel to the hotbed platform. Manual leveling is achieved only by the left nozzle.

1. After automatic leveling fails, enter the manual leveling interface as guided, or click "Manual Leveling" in the Settings interface and operate according to the pop-up prompts.

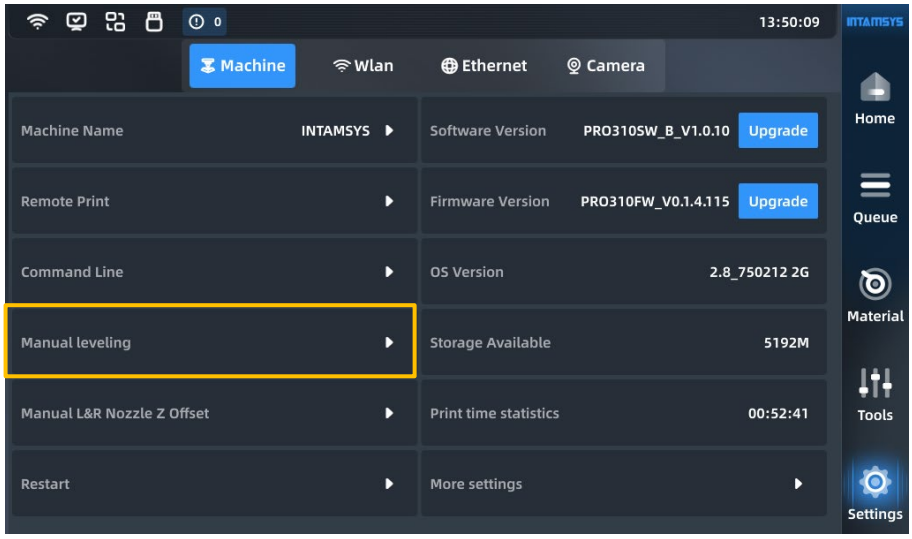

Fig. 4.56 Manual Leveling Access

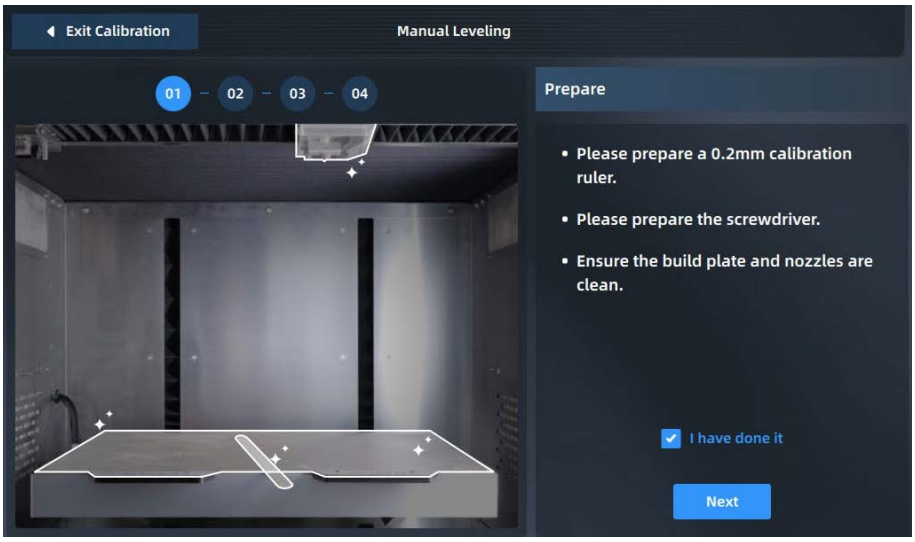

Fig. 4.57 Preparation for Manual Leveling

2. First tighten the screws counterclockwise one by one to slightly lower the hotbed.

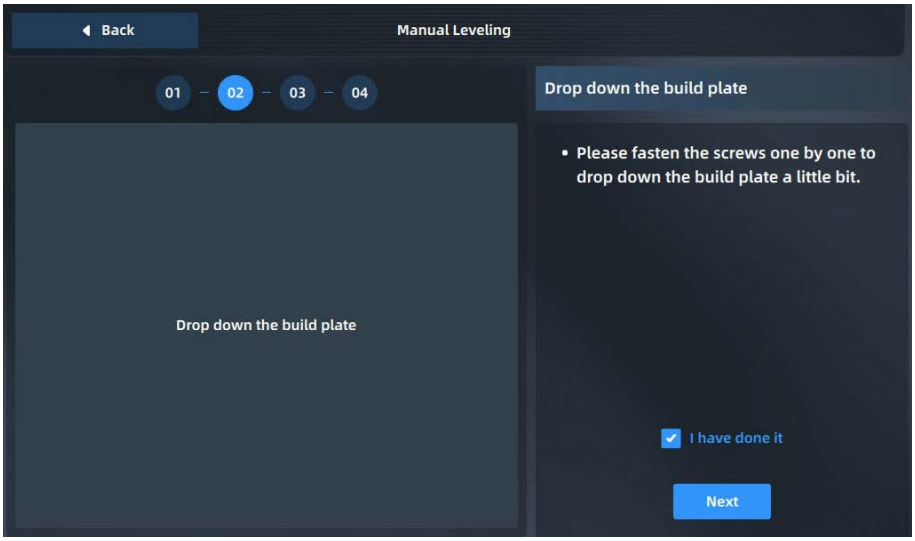

Fig. 4.58 Manual Leveling Step 1

3. Adjust the first screw in the left front corner, measure the distance between the nozzle and the printing platform with a feeler gauge (thickness: 0.2 mm), pull the feeler gauge back and forth until it just passes through, and then click the "Next" button;

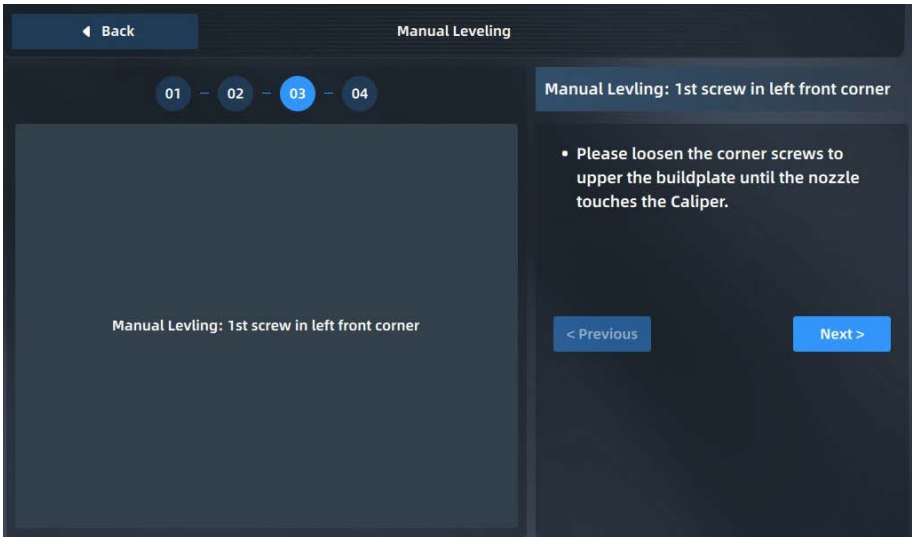

Fig. 4.59 Manual Leveling Step 2

4. After adjusting the 4 points on the platform for the first time in the same way, check "I have done it", and then click "Next" to repeat the leveling;

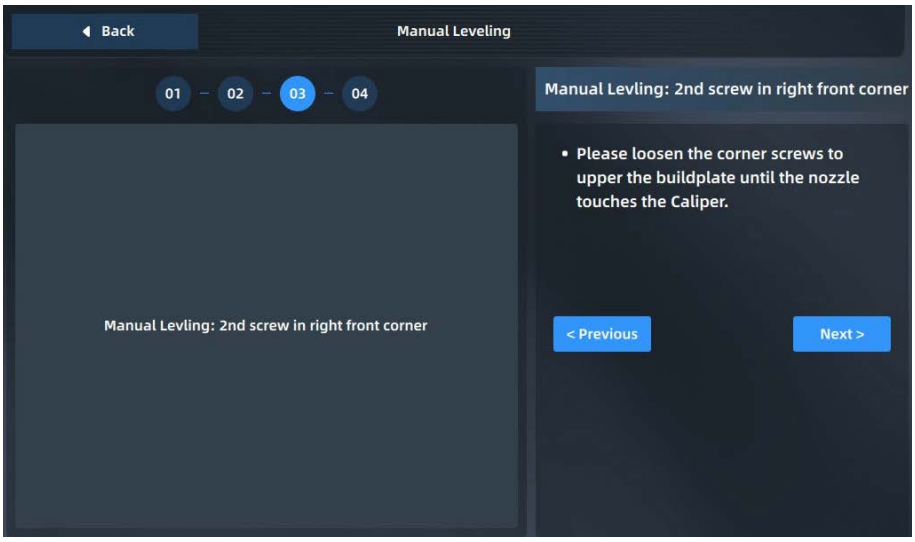

Fig. 4.60 Manual Leveling Step 3

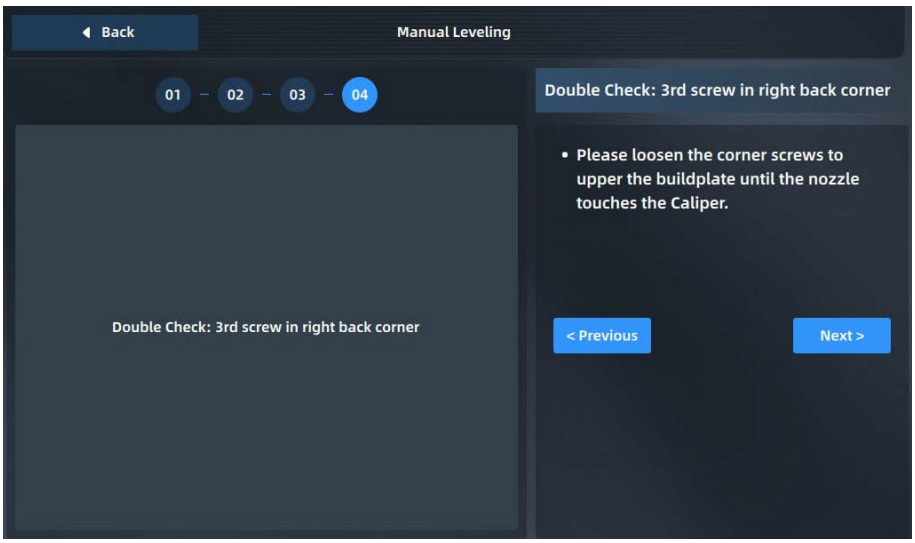

Fig. 4.61 Manual Leveling Step 4

5. After the second manual leveling, a Complete button pops up on the screen. Click it to lower the platform to the bottom of Z-axis, and then return. Manual leveling ends.

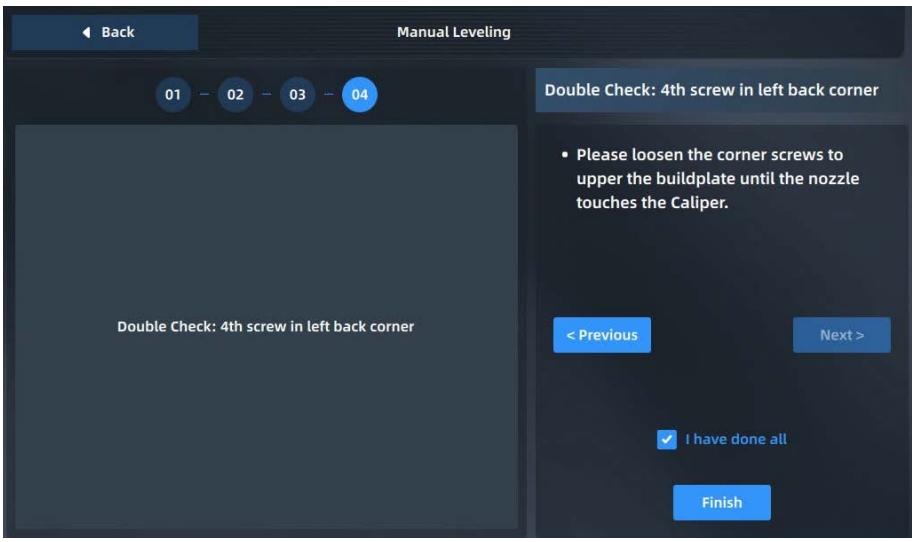

Fig. 4.62 End of Manual Leveling

Note:

- **During the installation of the printing buildplate before leveling, it shall be correctly adsorbed on the platform along the guide grooves on both sides of the platform base plate;**
- **Clean the residual materials on the nozzle tip before leveling;**
- **Clean the printing platform before leveling; no foreign matters shall be left;**
- **Before leveling, clean the chamber to avoid collision with foreign matters when the platform descends.**

4.6.7 Manual L&R Nozzle Z Offset

Test and manually calibrate the L&R Nozzle Z Offset through a 0.2 mm-thick feeler gauge.

1. Enter from Settings, select "Manual L&R Nozzle Z Offset", and perform operations in turn according to the prompt on the screen.

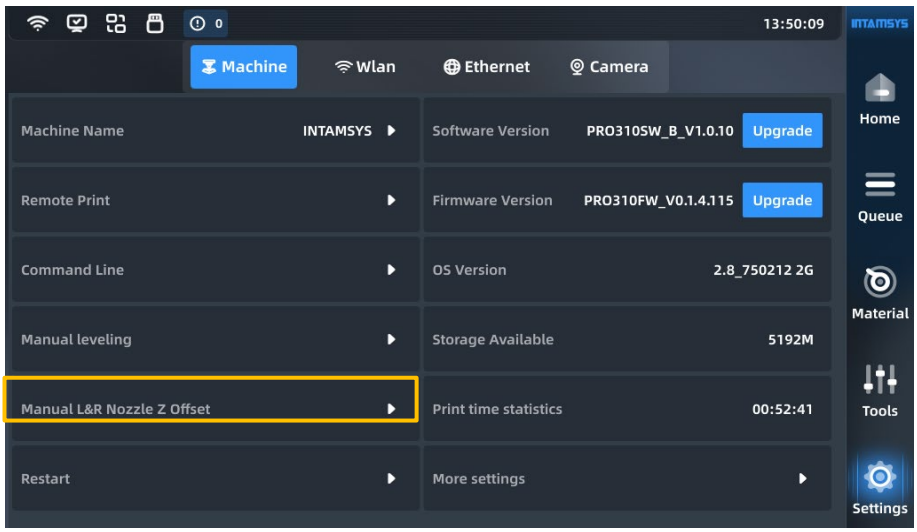

Fig. 4.63 L&R Nozzle Z Offset Access

2. Prepare a 0.2 mm-thick feeler gauge to ensure that the hotbed platform is tightened without residual materials.

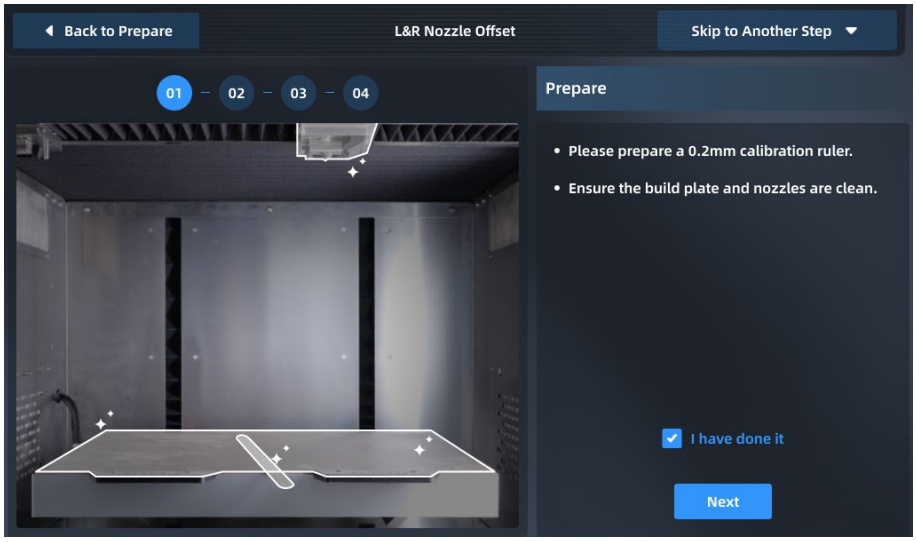

Fig. 4.64 Preparation for L&R Nozzle Z Offset

3. After waiting for the left and right nozzles and hotbed platform to be heated to an appropriate temperature, clean up the materials adhered to the nozzles with an accompanying brush, and click "I have done it".

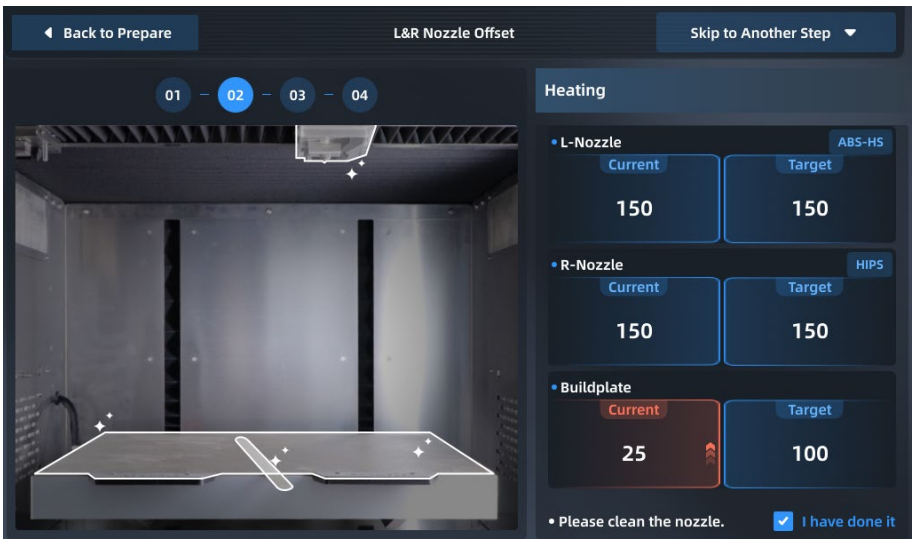

Fig. 4.65 Waiting for Heating Interface

4. Measure the distance between the nozzle and the printing platform with a feeler gauge (thickness: 0.2 mm), pull the feeler gauge back and forth until it just passes through, adjust the distance on the screen so that the nozzles rise or drop, and then click "Calibrate" button.

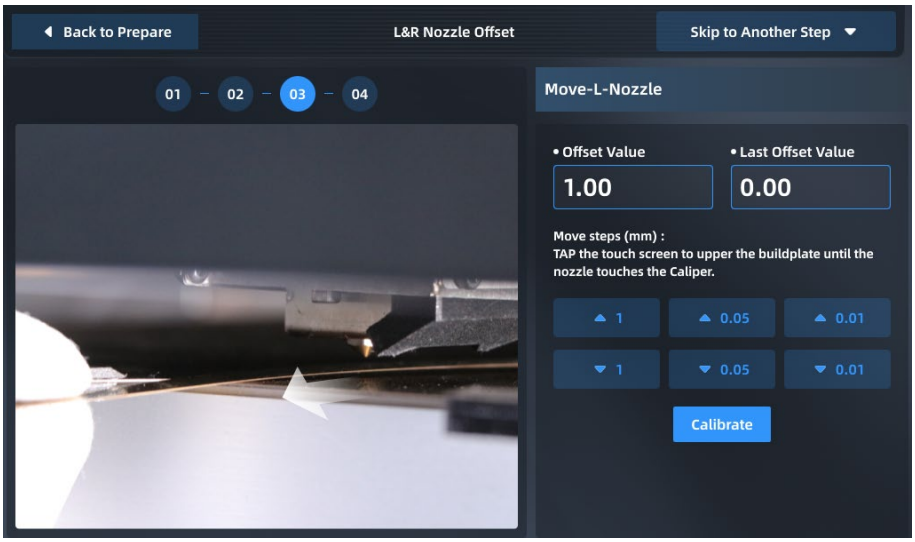

Fig. 4.66 L-nozzle Z Offset

5. After the L-Nozzle offset is completed, calibrate the R-Nozzle with the same method.

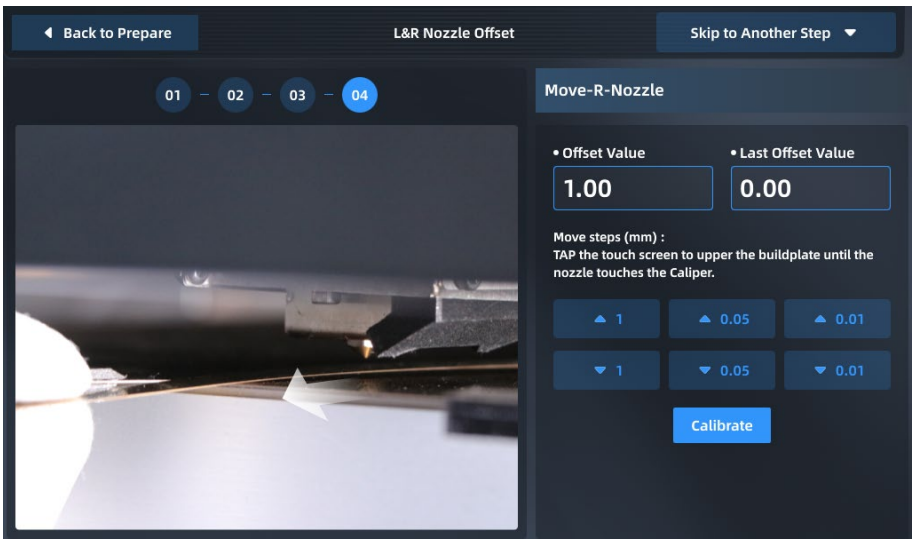

Fig. 4.67 R-nozzle Z Offset

6. The offset value of the heights of the left and right extruders is displayed in a pop-up window. Click "OK" to end Z-axis offset.

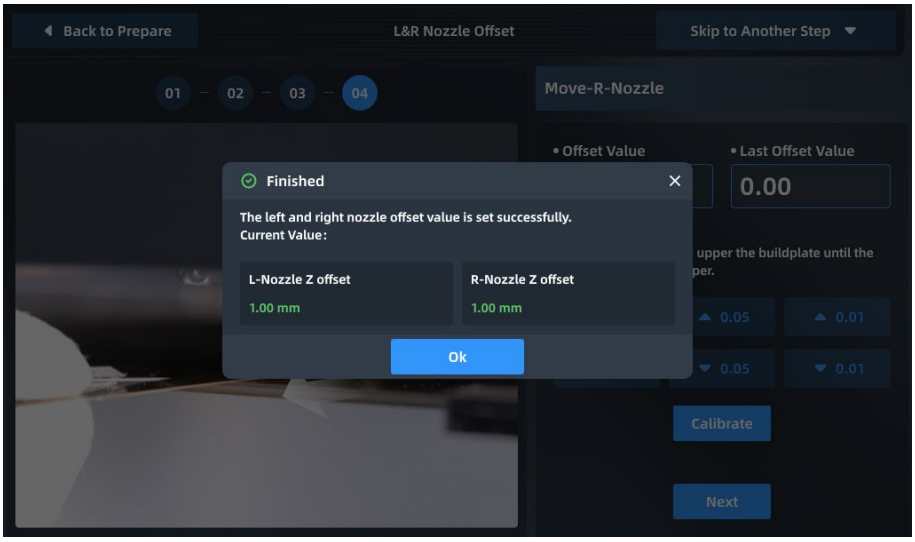

Fig. 4.68 End of L&R Nozzle Z offset

4.6.8 Wi-Fi Settings

Wi-Fi connection can be enabled for the printer.

Click "Settings" to enter the wireless network interface, and enable/disable it through the button on the right side of WLAN. Blue indicates that it is enabled. Wi-Fi connection can be enabled or disabled in the WLAN interface, which displays the Wi-Fi list on the left side. It can be automatically refreshed or refreshed after the user slides the screen. On the left side, select the Wi-Fi that can be connected and enter the password to connect with it. The device can automatically record the password and access the Internet.

Enable DHCP mode, click the "Apply" button, and the machine automatically acquires the unmodifiable IP address and other contents. To manually modify the IP address and other

contents, manually disable the DHCP mode to enter the manual setting mode, modify them, and click the "Apply" button to apply them.

You can configure other Wi-Fi settings. After restart, the printer will automatically reconnect to the last Wi-Fi hotspot (on the premise that the following options are enabled: Settings Interface > More Settings > Wi-Fi Auto Reconnect.

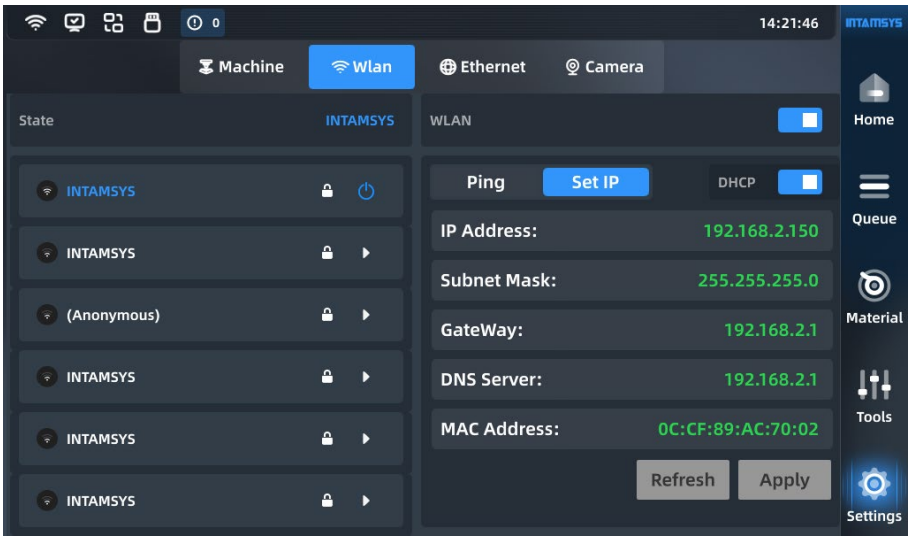

Fig. 4.69 Wi-Fi Settings

4.6.9 Wired Network Settings

The printer can be connected to the Internet through a network cable. Click "Set IP" at the bottom left to complete the basic settings.

Enable DHCP mode, click the "Apply" button, and the machine automatically acquires the unmodifiable IP address and other contents. To manually modify the IP address and other contents, manually disable the DHCP mode to enter the manual setting mode, modify them, and click the "Apply" button to apply them.

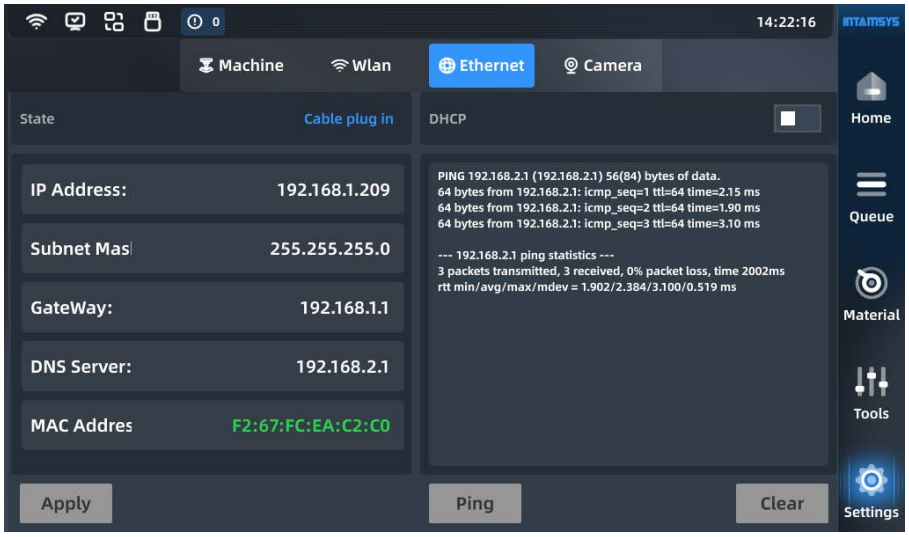

Fig. 4.70 Wired Network Settings

4.7 Other Interfaces

4.7.1 Warning Prompt

The warning information icon

can be displayed in the status bar at the top of the main interface. You can click to view the error code, and handle it according to the description and prompt operations to clear the warning.

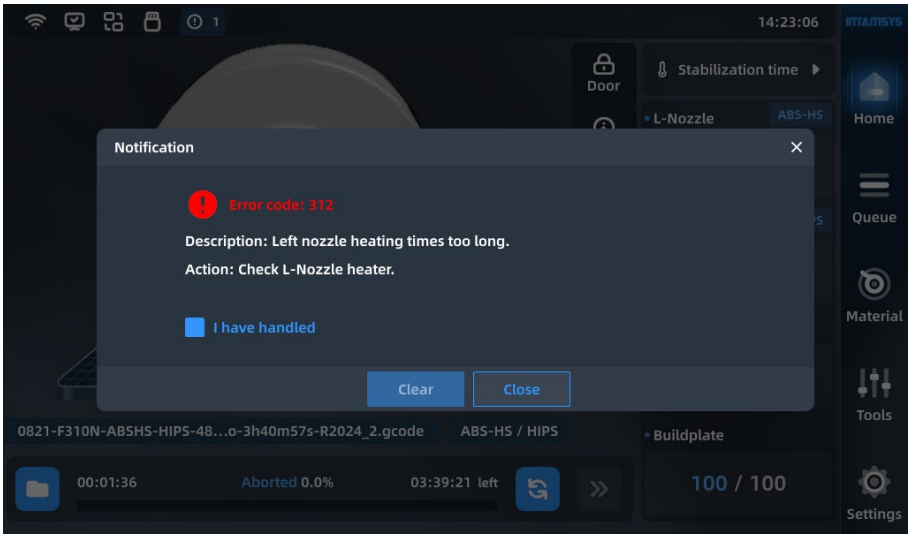

Fig. 4.71 Warning Prompt

You can view previous alarm messages of the last day, last three days or last week.

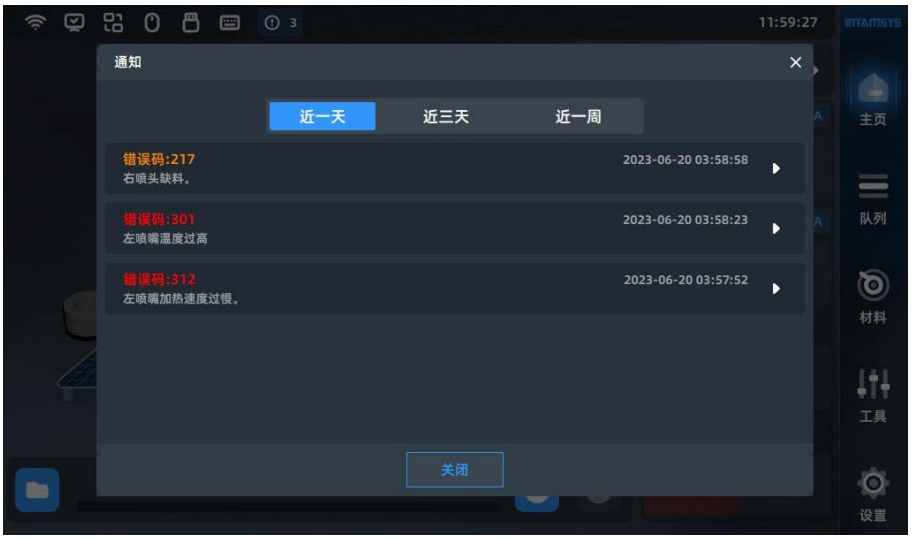

Fig. 4.72 Alarm Statistics

4.7.2 Resuming Print

If you get some error messages during printing, indicating that print can be resumed. You can operate by simply following the steps in the wizard.