TEST REPORT

Report No.:	BCTC2605525578E
Applicant:	SEEWORLD Technology Co.,ltd
Product Name:	GPS Tracker
Test Model:	G60L
Tested Date:	2026-06-04 to 2026-06-15
Issued Date:	2026-06-15

Shenzhen BCTC Technology Co., Ltd.

FCC ID: 2AWTV-G60L

Product Name:	GPS Tracker
Trademark:	N/A
Model/Type Reference:	G60L EF421
Prepared For:	SEEWORLD Technology Co.,ltd
Address:	4th Floor, No.121, Kecheng Building, Science Road, Luogang District, Guangzhou, Guangdong Province, China, 510700
Manufacturer:	SEEWORLD Technology Co.,ltd
Address:	4th Floor, No.121, Kecheng Building, Science Road, Luogang District, Guangzhou, Guangdong Province, China, 510700
Prepared By:	Shenzhen BCTC Technology Co., Ltd.
Address:	Room 101M, Unit 1, Building1, Pengyuan, No.18, Lilang Road, Shanglilang, Nanwan Subdistrict, Longgang District, Shenzhen, Guangdong, China.
Sample Received Date:	2026-06-04
Sample Tested Date:	2026-06-04 to 2026-06-15
Report No.:	BCTC2605525578E
Test Standards:	FCC CFR Title 47 Part 2 FCC CFR Title 47 Part 22 FCC CFR Title 47 Part 24 FCC CFR Title 47 Part 27 ANSI C63.26-2015
Test Results:	PASS
Remark:	This is radio test report for 4G in US full bands.

Prepared by :	Reviewer by :	Approved by:
Louis.zeng	Mike zheng	Sewen Guo
Louis Zeng /Editor	Mike Zheng / Supervisor	Sewen Guo/Manager

The test report is effective only with both signature and specialized stamp.This result(s) shown in this report refer only to the sample(s) tested. Without written approval of Shenzhen BCTC Technology Co., Ltd, this report can't be reproduced except in full.The tested sample(s) and the sample information are provided by the client.

Table Of Content

Test Report Declaration Page
1. Version 5
2. Test Summary 6
3. Measurement Uncertainty 7
4. Product Information And Test Setup 8
4.1 Product Information 8
4.2 Test Setup Configuration 10
4.3 Emission Designator 10
4.4 Description Operation Frequency 11
4.5 Test Mode 13
4.6 Support Equipment 16
4.7 Measurement Results Explanation Example 16
4.8 Measurement Test Environments 16
5. Test Facility And Test Instrument Used 17
5.1 Test Facility 17
5.2 Test Instrument Used 17
6. Transmitter Radiated Power (EIRP/ERP) 19
6.1 Block Diagram Of Test Setup 19
6.2 Limit 21
6.3 Test procedure 22
6.4 Test Result 23
7. Peak-To-Average Ratio(PAR) Of Transmitter 24
7.1 Block Diagram Of Test Setup 24
7.2 Limit 24
7.3 Test procedure 25
7.4 Test Result 25
8. Emission Bandwidth 26
8.1 Block Diagram Of Test Setup 26
8.2 Standard Applicable 26
8.3 Test procedure 27
8.4 Test Result 28
9. Out of Band Emissions at Antenna Terminal 29
9.1 Block Diagram Of Test Setup 29
9.2 Limit 29
9.3 Test procedure 31
9.4 Test Result 31
10. Spurious Radiated Emissions 32
10.1 Block Diagram Of Test Setup 32
10.2 Limit 33
10.3 Test procedure 35
10.4 Test Result 36
11. Frequency Stability 39

11.1 Block Diagram Of Test Setup 39
11.2 Limit 39
11.3 Test procedure 39
11.4 Test Result 40
12. EUT Test Setup Photographs 41

(Note: N/A Means Not Applicable)

1. Version

Report No.	Issue Date	Description	Approved
BCTC2605525578E	2026-06-15	Original	Valid

2. Test Summary

The Product has been tested according to the following specifications:

No.	Test Parameter	Clause No	Results
1	RF Exposure	1.1307 2.1093	PASS
2	Transmitter Radiated Power (EIRP/ERP)	22.913 24.232 27.50 2.1046	PASS
3	Peak-to-average Ratio(PAR) of Transmitter	2.1046 22.913(d) 24.232(d) 27.50(d)	PASS
4	Emission Bandwidth	2.1049 22.917 24.238 27.53	PASS
5	Spurious Emissions at Antenna Terminal	22.917 24.238 27.53 2.1051	PASS
6	Spurious Radiation Emissions	22.917 24.238 27.53 2.1051	PASS
7	Out of Band Emissions	22.917 24.238 27.53 2.1051	PASS
8	Frequency Stability	22.355 24.235 27.54, 2.1055	PASS

NOTE1: N/A (Not Applicable)
NOTE2: According to FCC OET KDB 971168 D01 Power Meas License Digital Systems v03r01 ：MEASUREMENT GUIDANCE FOR CERTIFICATION OF LICENSED DIGITAL TRANSMITTERS, ANSI C63.26-2015：American National Standard for Compliance Testing of Transmitters Used in Licensed Radio Services
Note 3: "*" indicates that the test results are determined base on CFR 47 FCC Part 22/24/27. And the test results are took into account measurement uncertainty(see section 3 for measurement uncertainty information)

3. Measurement Uncertainty

Where relevant, the following measurement uncertainty levels have been estimated for tests performed on the Product as specified in CISPR 16-4-2:2011/AMD2:2018. This uncertainty represents an expanded uncertainty expressed at approximately the 95% confidence level using a coverage factor of k=2.

No.	Item	Uncertainty
1	3m chamber Radiated spurious emission(9kHz-30MHz)	U=3.7dB
2	3m chamber Radiated spurious emission(30MHz-1GHz)	U=4.8dB
3	3m chamber Radiated spurious emission(1GHz-18GHz)	U=5.5dB
4	3m chamber Radiated spurious emission(18GHz-40GHz)	U=5.0dB
5	Conducted Emission(150kHz-30MHz)	U=3.0dB
6	Power Spectral Density	U=3.46dB
7	Peak Power	U=0.31dB
8	Occupied Bandwidth/Frequency Range	U=3.46%
9	Conducted output power uncertainty	U=0.55dB
10	Frequency Error	U= 53.50 Hz
11	Frequency Drift	U=0.64 KHz
12	Temperature	U= 0.59 ℃
13	Humidity	U= 5.3 %

4. Product Information And Test Setup

4.1 Product Information

Model/Type reference:	G60L EF421
Model differences:	All the model are the same circuit and RF module, except model names, the test model is G60L.
Hardware Version:	N/A
Software Version:	N/A
Tx Frequency:	LTE Band 2: 1850 MHz ~ 1910 MHz LTE Band 4: 1710 MHz ~ 1755 MHz LTE Band 5: 824 MHz ~ 849 MHz LTE Band 7: 2500MHz-2570MHz LTE Band 66: 1710MHz ~ 1780MHz
Rx Frequency:	LTE Band 2: 1930 MHz ~ 1990 MHz LTE Band 4: 2110 MHz ~ 2155 MHz LTE Band 5: 869 MHz ~ 894 MHz LTE Band 7: 2620MHz ~ 2690MHz LTE Band 66: 2110MHz ~ 2200MHz
Bandwidth:	LTE Band 2: 1.4MHz /3MHz /5MHz /10MHz /15MHz /20MHz LTE Band 4: 1.4MHz /3MHz /5MHz /10MHz /15MHz /20MHz LTE Band 5: 1.4MHz /3MHz /5MHz /10MHz LTE Band 7: 5MHz /10MHz /15MHz /20MHz LTE Band 66: 1.4MHz /3MHz /5MHz /10MHz /15MHz /20MHz
The Max RF Output Power (EIRP/ERP)	LTE Band 2: 24.31 dBm LTE Band 4: 24.2 dBm LTE Band 5: 20.22 dBm LTE Band 7: 25.17 dBm LTE Band 66: 24.75 dBm
99% Occupied Bandwidth:	LTE Band 2: 17M9G7D LTE Band 4: 18M0G7D LTE Band 5: 8M99G7D LTE Band 7: 18M0G7D LTE Band 66: 18M0G7D
Type of Modulation:	QPSK/16QAM
Antenna Type:	FPC Antenna
Antenna Gain:	LTE Band 2: 0.17 dBi LTE Band 4: -0.14 dBi LTE Band 5: -2.15 dBi LTE Band 7: 0.27 dBi LTE Band 66: -0.17 dBi
	Remark: ☒The antenna gain of the product comes from the antenna report provided by the customer, and the test data is affected by the customer information. Antenna gain information is provided by the client and the laboratory is not responsible for its authenticity ☐The antenna gain of the product is provided by the customer, and the test data is affected by the customer information. Antenna gain information is provided by the client and the laboratory is not responsible for its authenticity
Ratings:	DC 9-50V

Battery:	DC 3.7V, 140mAh

4.2 Test Setup Configuration

See test photographs attached in *EUT TEST SETUP PHOTOGRAPHS* for the actual connections between Product and support equipment.
Radiated Spurious Emission

E-1
EUT

4.3 Emission Designator

LTE Band 2	QPSK		16QAM	
BW(MHz)	**Emission Designator (99%OBW)**	**Maximum EIRP(W)**	**Emission Designator (99%OBW)**	**Maximum EIRP(W)**
1.4	1M11G7D	0.200	1M10W7D	0.171
3	2M70G7D	0.200	2M70W7D	0.172
5	4M52G7D	0.212	4M53W7D	0.188
10	8M99G7D	0.270	/	/
15	13M5G7D	0.265	/	/
20	17M9G7D	0.264	/	/

LTE Band 4	QPSK		16QAM	
BW(MHz)	**Emission Designator (99%OBW)**	**Maximum EIRP(W)**	**Emission Designator (99%OBW)**	**Maximum EIRP(W)**
1.4	1M10G7D	0.209	1M10W7D	0.167
3	2M71G7D	0.203	2M70W7D	0.169
5	4M53G7D	0.216	4M52W7D	0.190
10	8M99G7D	0.263	/	/
15	13M5G7D	0.262	/	/
20	18M0G7D	0.261	/	/

LTE Band 5	QPSK		16QAM	
BW(MHz)	**Emission Designator (99%OBW)**	**Maximum ERP(W)**	**Emission Designator (99%OBW)**	**Maximum ERP(W)**
1.4	1M10G7D	0.082	1M10W7D	0.065
3	2M71G7D	0.078	2M71W7D	0.065
5	4M53G7D	0.085	4M52W7D	0.073
10	8M99G7D	0.105	/	/

LTE Band 7	QPSK		16QAM	
BW(MHz)	Emission Designator (99%OBW)	Maximum ERP(W)	Emission Designator (99%OBW)	Maximum ERP(W)
5	4M53G7D	0.226	4M52W7D	0.211
10	9M03G7D	0.273	/	/
15	13M5G7D	0.264	/	/
20	18M0G7D	0.329	/	/

LTE Band 66	QPSK		16QAM	
BW(MHz)	Emission Designator (99%OBW)	Maximum EIRP(W)	Emission Designator (99%OBW)	Maximum EIRP(W)
1.4	1M10G7D	0.220	1M10W7D	0.169
3	2M70G7D	0.203	2M70W7D	0.171
5	4M51G7D	0.217	4M52W7D	0.186
10	9M00G7D	0.299	/	/
15	13M5G7D	0.285	/	/
20	18M0G7D	0.277	/	/

4.4 Description Operation Frequency

LTE Band 2(1.4MHz)		LTE Band 2(3MHz)	
Channel	Frequency (MHz)	Channel	Frequency (MHz)
18607	1850.7	18615	1851.5
18900	1880	18900	1880
19193	1909.3	19185	1908.5
LTE Band 2(5MHz)		**LTE Band 2(10MHz)**	
Channel	Frequency (MHz)	Channel	Frequency (MHz)
18625	1852.5	18650	1855
18900	1880	18900	1880
19175	1907.5	19150	1905
LTE Band 2(15MHz)		**LTE Band 2(20MHz)**	
Channel	Frequency (MHz)	Channel	Frequency (MHz)
18675	1857.5	18700	1860
18900	1880	18900	1880
19125	1902.5	19100	1900

LTE Band 4(1.4MHz)		LTE Band 4(3MHz)	
Channel	Frequency (MHz)	Channel	Frequency (MHz)
19957	1710.7	19965	1711.5
20175	1732.5	20175	1732.5
20393	1754.3	20385	1753.5
LTE Band 4(5MHz)		LTE Band 4(10MHz)	
Channel	Frequency (MHz)	Channel	Frequency (MHz)
19975	1712.5	20000	1715
20175	1732.5	20175	1732.5
20375	1752.5	20350	1750
LTE Band 4(15MHz)		LTE Band 4(20MHz)	
Channel	Frequency (MHz)	Channel	Frequency (MHz)
20025	1717.5	20050	1720
20175	1732.5	20175	1732.5
20325	1747.5	20300	1745

LTE Band 5(1.4MHz)		LTE Band 5(3MHz)	
Channel	Frequency (MHz)	Channel	Frequency (MHz)
20407	824.7	20415	825.5
20525	836.5	20525	836.5
20643	848.3	20635	847.5
LTE Band 5(5MHz)		LTE Band 5(10MHz)	
Channel	Frequency (MHz)	Channel	Frequency (MHz)
20425	826.5	20450	829
20525	836.5	20525	836.5
20625	846.5	20600	844

LTE Band 7(5MHz)		LTE Band 7(10MHz)	
Channel	Frequency (MHz)	Channel	Frequency (MHz)
20775	2502.5	20800	2505
21100	2535	21100	2535
21425	2567.5	21400	2565
LTE Band 7(15MHz)		LTE Band 7(20MHz)	
Channel	Frequency (MHz)	Channel	Frequency (MHz)
20825	2507.5	20850	2510
21100	2535	21100	2535
21375	2562.5	21350	2560

LTE Band 66(1.4MHz)		LTE Band 66(3MHz)	
Channel	**Frequency (MHz)**	**Channel**	**Frequency (MHz)**
131979	1710.7	131987	1711.5
132322	1745	132322	1745
132665	1779.3	132657	1778.5
LTE Band 66(5MHz)		**LTE Band 66(10MHz)**	
Channel	**Frequency (MHz)**	**Channel**	**Frequency (MHz)**
131997	1712.5	132022	1715
132322	1745	132322	1745
132647	1777.5	132622	1775
LTE Band 66(15MHz)		**LTE Band 66(20MHz)**	
Channel	**Frequency (MHz)**	**Channel**	**Frequency (MHz)**
132047	1717.5	132072	1720
132322	1745	132322	1745
132597	1772.5	132572	1770

4.5 Test Mode

Test modes are chosen to be reported as the worst case configuration below:

Test Mode		
Band	**Radiated TCs**	**Conducted TCs**
LTE Band 2	QPSK Link (1.4MHz / 3MHz / 5MHz / 10MHz / 15MHz / 20MHz)	QPSK Link (1.4MHz / 3MHz / 5MHz / 10MHz / 15MHz / 20MHz)
LTE Band 4	QPSK Link (1.4MHz / 3MHz / 5MHz / 10MHz / 15MHz / 20MHz)	QPSK Link (1.4MHz / 3MHz / 5MHz / 10MHz / 15MHz / 20MHz)
LTE Band 5	QPSK Link (1.4MHz / 3MHz / 5MHz / 10MHz)	QPSK Link (1.4MHz / 3MHz / 5MHz / 10MHz)
LTE Band 7	QPSK Link (5MHz /10MHz / 15MHz / 20MHz)	QPSK Link (5MHz /10MHz / 15MHz / 20MHz)
LTE Band 66	QPSK Link (1.4MHz / 3MHz / 5MHz / 10MHz / 15MHz / 20MHz)	QPSK Link (1.4MHz / 3MHz / 5MHz / 10MHz / 15MHz / 20MHz)
Note 1: All modes and data rates and positions were investigated.		

Antenna port conducted and radiated test items were performed according to KDB 971168 D01 Power Meas License Digital Systems v03 with maximum output power.

Radiated measurements were performed with rotating EUT in different three orthogonal test planes to find the maximum emission.

Test Items	Band	Bandwidth (MHz)						Modulation		RB #			Test Channel		
		1.4	3	5	10	15	20	QPSK	16QAM	1	Half	Full	L	M	H
Max. Output Power	2	v	v	v	v	v	v	v	v	v	v	v	v	v	v
	4	v	v	v	v	v	v	v	v	v	v	v	v	v	v
	5	v	v	v	v	-	-	v	v	v	v	v	v	v	v
	7	-	-	v	v	v	v	v	v	v	v	v	v	v	v
	66	v	v	v	v	v	v	v	v	v	v	v	v	v	v
Peak-to-Average Ratio	2	v	v	v	v	v	v	v	v	v	v	v	v	v	v
	4	v	v	v	v	v	v	v	v	v	v	v	v	v	v
	5	v	v	v	v	-	-	v	v	v	v	v	v	v	v
	7			v	v	v	v	v	v	v	v	v	v	v	v
	66	v	v	v	v	v	v	v	v	v	v	v	v	v	v
26dB and 99% Bandwidth	2	v	v	v	v	v	v	v	v	v	v	v	v	v	v
	4	v	v	v	v	v	v	v	v	v	v	v	v	v	v
	5	v	v	v	v	-	-	v	v	v	v	v	v	v	v
	7			v	v	v	v	v	v	v	v	v	v	v	v
	66	v	v	v	v	v	v	v	v	v	v	v	v	v	v
Conducted Band Edge	2	v	v	v	v	v	v	v	v	v	v	v	v	-	v
	4	v	v	v	v	v	v	v	v	v	v	v	v	-	v
	5	v	v	v	v	-	-	v	v	v	v	v	v	-	v
	7			v	v	v	v	v	v	v	v	v	v	v	v
	66	v	v	v	v	v	v	v	v	v	v	v	v	-	v
Conducted Spurious Emission	2	v	v	v	v	v	v	v	v	v	-	-	v	v	v
	4	v	v	v	v	v	v	v	v	v	-	-	v	v	v
	5	v	v	v	v	-	-	v	v	v	-	-	v	v	v
	7			v	v	v	v	v	v	v	v	v	v	v	v
	66	v	v	v	v	v	v	v	v	v	-	-	v	v	v
Frequency Stability	2	v	-	-	-	-	-	v	v	v	-	-	v	v	v
	4	v	-	-	-	-	-	v	v	v	-	-	v	v	v
	5	v	-	-	-	-	-	v	v	v	-	-	v	v	v
	7	v						v	v	v	-	-	v	v	v
	66	v	-	-	-	-	-	v	v	v	-	-	v	v	v
E.R.P./ E.I.R.P.	2	v	v	v	v	v	v	v	v	v	v	v	v	v	v
	4	v	v	v	v	v	v	v	v	v	v	v	v	v	v
	5	v	v	v	v	-	-	v	v	v	v	v	v	v	v
	7			v	v			v	v	v	v	v	v	v	v

	66	**v**	**v**	**v**	**v**	**v**	**v**	**v**	**v**	**v**	**v**	**v**	**v**	**v**	**v**
Radiated Spurious Emission	2	v	-	-	-	-	-	v	v	v	-	-	v	v	v
	4	**v**	**-**	**-**	**-**	**-**	**-**	**v**	**v**	**v**	**-**	**-**	**v**	**v**	**v**
	5	**v**	**-**	**-**	**-**	**-**	**-**	**v**	**v**	**v**	**-**	**-**	**v**	**v**	**v**
	7	**v**						**v**	**v**	**v**			**v**	**v**	**v**
	66	**v**	**-**	**-**	**-**	**-**	**-**	**v**	**v**	**v**	**-**	**-**	**v**	**v**	**v**
Note	1.The mark “v “ means that this configuration is chosen for testing 2.The mark “-“ means that this bandwidth is not supported.														

4.6 Support Equipment

No.	Device Type	Brand	Model	Series No.	Note
E-1	GPS Tracker	N/A	G60L	N/A	EUT

Notes:
1. All the equipment/cables were placed in the worst-case configuration to maximize the emission during the test.
2. Grounding was established in accordance with the manufacturer's requirements and conditions for the intended use.

4.7 Measurement Results Explanation Example

For all conducted test items:
The offset level is set in the spectrum analyzer to compensate the RF cable loss and attenuator factor between RF conducted output port and spectrum analyzer. With the offset compensation, the spectrum analyzer reading level will be exactly the RF output level. The spectrum analyzer offset is derived from RF cable loss and attenuator factor. Offset = RF cable loss + attenuator factor.

4.8 Measurement Test Environments

During the measurement, the environmental conditions were within the listed ranges:

Test Voltage	NV (Normal Voltage):	DC 3.7V
	LV (Low Voltage) :	DC 3.33V
	HV (High Voltage) :	DC 4.07V
Test Temperature	NV (Normal Voltage) :	25 °C
	LV (Low Voltage) :	-10 °C
	HV (High Voltage) :	55 °C
Humidity	25% to 75%	

5. Test Facility And Test Instrument Used

5.1 Test Facility

All measurement facilities used to collect the measurement data are located at
Shenzhen BCTC Technology Co., Ltd.
Address: Room 101M, Unit 1, Building1, Pengyuan, No.18, Lilang Road, Shanglilang, Nanwan Subdistrict, Longgang District, Shenzhen, Guangdong, China.
The site and apparatus are constructed in conformance with the requirements of ANSI C63.4a-2017 and CISPR 16-1-1:2019 other equivalent standards.
FCC Test Firm Registration Number: 754702
ANAB certificate registration number is: CN3479

5.2 Test Instrument Used

Conducted emissions Test					
Equipment	**Manufacturer**	**Model#**	**Serial#**	**Last Cal.**	**Next Cal.**
Receiver	R&S	ESCI	101421	2025.08.30	2026.08.29
AMN	SCHWHRZBECK	NSLK8128	05152	2026.01.22	2027.01.21
AMN	SCHWHRZBECK	NSLK8127	8127739	2025.09.16	2026.09.15
Pulse Limiter	SCHWHRZBECK	VTSD 9561-F-N	00547	2025.08.30	2026.08.29
Temperature & Humidity	Wetest	HTC-1	/	2025.09.01	2026.08.31
Software	EZ-EMC	Ver.EMC-CON 3A1	/	/	/

Radiated Emissions Test (966 Chamber)					
Equipment	**Manufacturer**	**Model#**	**Serial#**	**Last Cal.**	**Next Cal.**
966 chamber	ChengYu	966 Room	966	2023.09.25	2026.09.24
Loop Antenna	Schwarzbeck	FMZB1519B	00014	2026.01.05	2027.01.04
Broadband antenna	SCHWHRZBECK	VULB9168	01620	2025.08.29	2026.08.28
Horn antenna (1 GHz -18GHz)	SCHWARZBECK	BBHA 9120 D	2792	2025.08.29	2026.08.28
Horn antenna (18 GHz -40GHz)	SCHWARZBECK	BBHA9170	00822	2025.12.29	2026.12.28
Receiver	R&S	ESR	1316	2025.08.30	2026.08.29
Spectrum Analyzer	R&S	FSV40	101328	2026.01.22	2027.01.21
Amplifier	SCHWHRZBECK	BBV9744	568	2025.08.30	2026.08.29

Amplifier	EMC INSTRUMENTS CORPORATION	EMC0518A45 SEE	EMT-SZ2233	2025.08.30	2026.08.29
Amplifier (18GHz-40GHz)	MITEQ	TTA1840-35-HG	2034381	2026.05.09	2027.05.08
Band 2.4G-2.5G Filter	COM-MW	ZBSF6-C5150-5350-1117	2220980	2025.08.30	2026.08.29
RF cable 3# (9kHz-6GHz)	Yunyi	10M	/	2025.08.30	2026.08.29
RF cable 9# (9kHz-1GHz)	Yunyi	2M	/	2025.10.28	2026.10.27
RF cable 5# (1GHz -18GHz)	SKET	9M	18038626	2025.08.30	2026.08.29
RF cable 6# (1GHz -18GHz)	SKET	5M	#10	2025.09.05	2026.09.04
RF cable 10# (18GHz-40GHz)	/	2M	2M	2026.05.09	2027.05.08
RF cable 11# (18GHz-40GHz)	/	2.5M	2.5M	2026.05.09	2027.05.08
Temperature & Humidity	Wetest	HTC-1	/	2025.09.05	2026.09.04
Communication test set	R&S	CMW500	157483	2025.08.30	2026.08.29
Software	EZ-EMC	Ver.FA-03A2	/	/	/

RF Conducted Test					
Equipment	**Manufacturer**	**Model#**	**Serial#**	**Last Cal.**	**Next Cal.**
Spectrum Analyzer	Keysight	N9020A	MY51287403	2025.08.30	2026.08.29
Signal Generator	Keysight	N5182A	MY50144088	2025.08.30	2026.08.29
Power Sensor	Keysight	U2001	MY51250006	2025.10.28	2026.10.27
Temperature & Humidity	Wetest	HTC-1	/	2025.09.01	2026.08.31
Communication test set	R&S	CMW500	157483	2025.08.30	2026.08.29
Radio frequency control box	MWRFtest	MW100-RFCB	\	\	\
Software	MWRFtest	MTS 8310	V 3.0.0.0	\	\
D.C. Power Supply	Elektro-Automatik GmbH & Co.KG	D-41747 Viersen	6230316	2025.09.30	2026.08.29
Temperature and humidity test chamber	Auchno	OJN-9606-408L	19120183	2025.07.09	2026.07.08

6. Transmitter Radiated Power (EIRP/ERP)

6.1 Block Diagram Of Test Setup

Conducted output power test method:

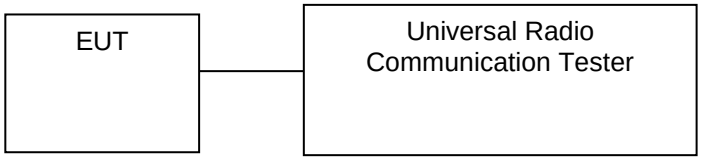

Radiated power test method:
（A）Radiated Emission Test-Up Frequency Below 30MHz

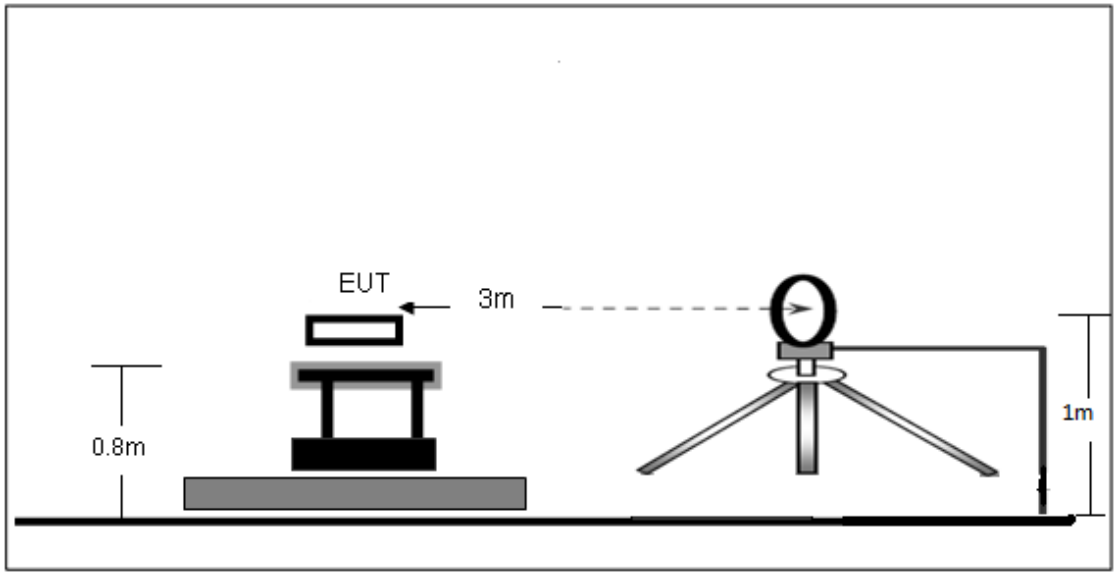

（B）Radiated Emission Test-Up Frequency 30MHz~1GHz

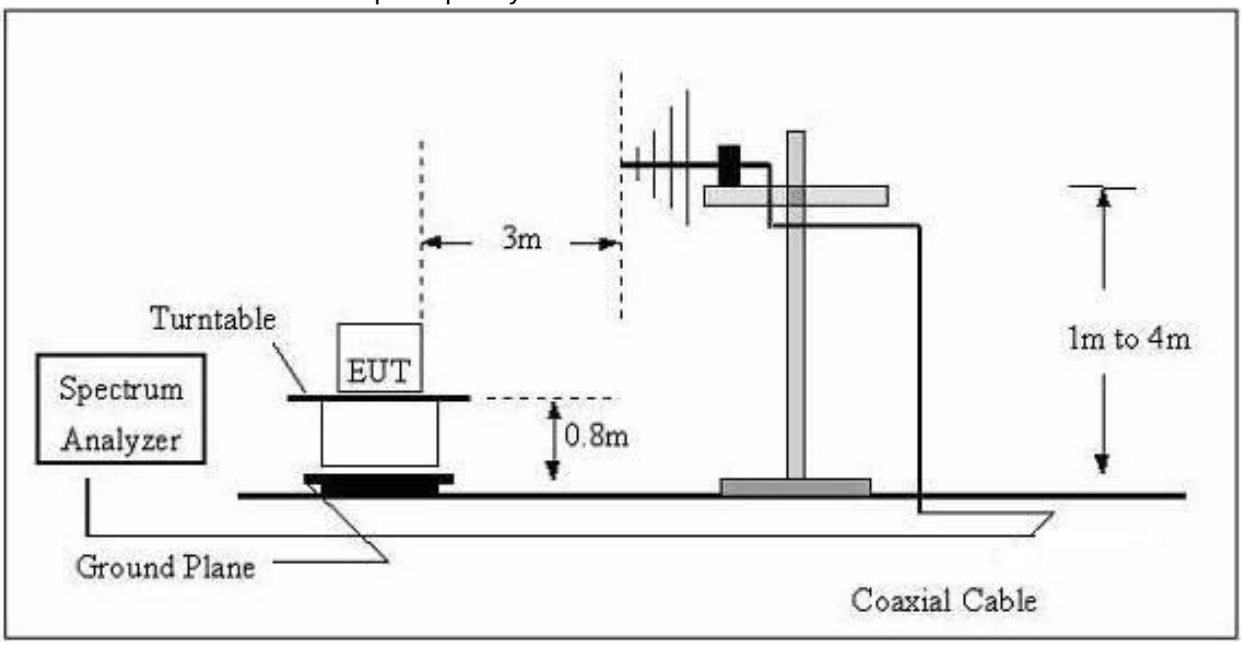

（C）Radiated Emission Test-Up Frequency Above 1GHz

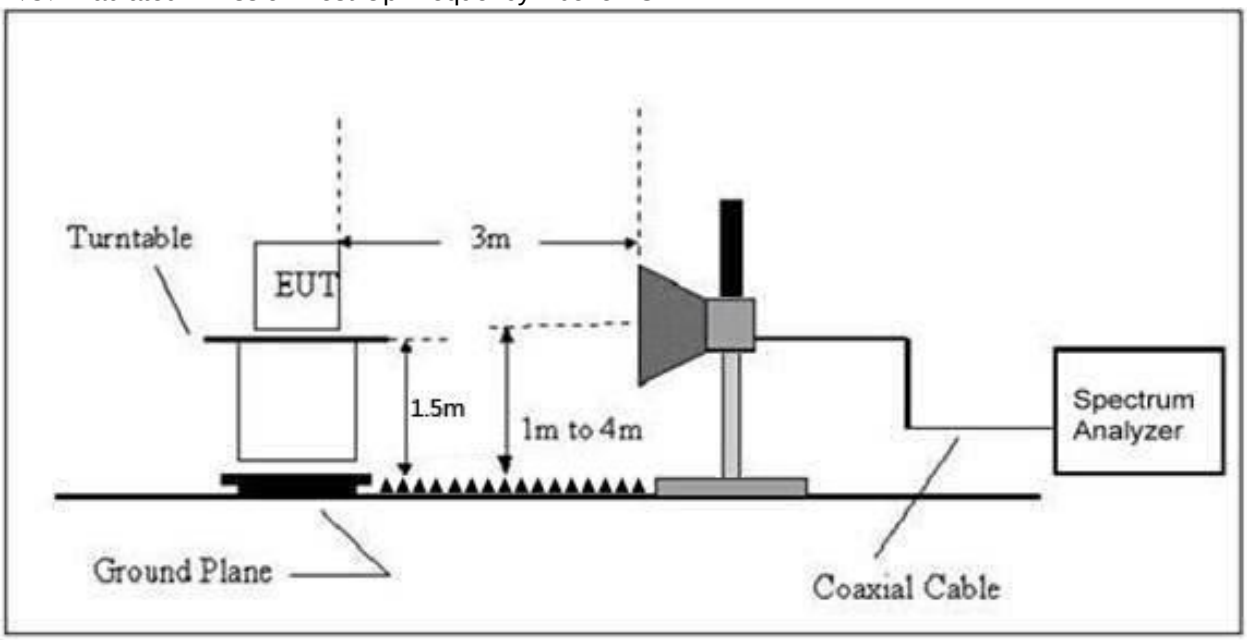

6.2 Limit

FCC § 2.1046 & 22.913(a) & 24.232(c) & 27.50(a) & 27.50(b) & 27.50(c) & 27.50(d) & 27.50(h) & 27.50(j) & 27.50(k)
According to FCC section 22.913(a) (5), the Effective Radiated Power (ERP) of mobile transmitters and auxiliary test transmitters must not exceed 7 watts.

According to FCC section 24.232(c), mobile and portable stations are limited to 2 watts EIRP and the equipment must employ a means for limiting power to the minimum necessary for successful communications.

According to FCC section 27.50(a) (3), for mobile and portable stations transmitting in the 2305-2315MHz band or the 2350-2360MHz band, the average EIRP must not exceed 50 milliwatts within any 1 megahertz of authorized bandwidth, except that for mobile and portable stations compliant with 3GPP LTE standards.

FCC section 27.50(b) (10), portable stations (hand-held devices) transmitting in the 746-757MHz, 776-788MHz, and 805-806MHz bands are limited to 3 watts ERP.

FCC section 27.50(c) (10), portable stations (hand-held devices) in the 600MHz uplink band and the 698-746MHz band, and fixed and mobile stations in the 600MHz uplink band are limited to 3 watts ERP.

FCC section 27.50(d) (4), fixed, mobile, and portable (hand-held) stations operating in the 1710-1755 MHz band and mobile and portable stations operating in the 1695-1710 MHz and 1755-1780 MHz bands are limited to 1 watt EIRP. Fixed stations operating in the 1710-1755 MHz band are limited to a maximum antenna height of 10 meters above ground. Mobile and portable stations operating in these bands must employ a means for limiting power to the minimum necessary for successful communications. Fixed, mobile, and portable (hand-held) stations operating in the 2000-2020 MHz band are limited to 2 watts EIRP.
And FCC section 27.50(h) (2), for mobile and other user stations, mobile stations are limited to 2.0 watts EIRP. All user stations are limited to 2.0 watts transmitter output power.

FCC section 27.50(j) (3), for mobile, and portable (hand-held) stations operating in the 3700-3980 MHz band are limited to 1 watt EIRP.

FCC section 27.50(k) (3), Mobile devices are limited to 1Watt (30 dBm) EIRP in the 3450-3550 MHz band

6.3 Test procedure

Description of the Conducted Output Power Measurement

The EUT is coupled to the SS with attenuator through power splitter; the RF load attached to EUT antenna terminal is 50Ohm; the path loss as the factor is calibrated to correct the reading. A system simulator is used to establish communication with the EUT, and its parameters are set to force the EUT transmitting at maximum output power. The measured power in the radio frequency on the transmitter output terminals shall be reported.

The relevant equation for determining the conducted measured value is:

Conducted Output Power Value (dBm) = Measured Value (dBm) + Path Loss (dB)

where:

Conducted Output Power Value = final conducted measured value in the conducted power test, in dBm;

Measured Value = measured conducted power received by spectrum analyzer or power meter, in dBm;

Path Loss = signal attenuation in the connecting cable between the transmitter and spectrum analyzer or power meter, including external cable loss, in dB;

During the test, the data of Path Loss (dB) is added in the spectrum analyzer or power meter, so Measured Value (dBm) is the final values which contains the data of Path Loss (dB).

Description of the Transmitter Radiated Power Measurement

In many cases, the RF output power limits for licensed digital transmission devices is specified in terms of effective radiated power (ERP) or equivalent isotropic radiated power (EIRP). Typically, ERP is specified when the operating frequency is less than or equal to 1 GHz and EIRP is specified when the operating frequency is greater than 1 GHz. Both are determined by adding the transmit antenna gain to the conducted RF output power with the primary difference between the two being that when determining the ERP, the transmit antenna gain is referenced to a dipole antenna (i.e., dBd) whereas when determining the EIRP, the transmit antenna gain is referenced to an isotropic antenna (dBi).

Final measurement calculation as below:

Determining ERP and EIRP from conducted RF output power measurement results

Subclause 5.2.5.5 of ANSI C63.26-2015 is applicable, along with the following provisions. For personal/portable radios utilizing an integral antenna, the factor LC is typically negligible. However, in a fixed station transmit system that utilizes a long cable run between the transmitter and the transmitting antenna, this factor can be significant. The minimum cable loss should be used in this equation.

The relevant equation for determining the ERP or EIRP from the conducted RF output power measured using the guidance provided above is:

ERP or EIRP = P_{Meas} + GT − LC

where:

ERP or EIRP = effective radiated power or equivalent isotropically radiated power, respectively (expressed in the same units as P_{Meas}, typically dBW or dBm);

P_{Meas} = measured transmitter output power or PSD, in dBm or dBW;

GT = gain of the transmitting antenna, in dBd (ERP) or dBi (EIRP);

LC = signal attenuation in the connecting cable between the transmitter and antenna, in dB.

dBd (ERP)=dBi (EIRP) -2.15 dB

For devices utilizing multiple antennas, KDB 662911 provides guidance for determining the effective array transmit antenna gain term to be used in the above equation.

The relevant equation for determining the ERP/EIRP from the radiated RF output power is:

ERP/EIRP (dBm) = SA Read Value (dBm) + Correction Factor (dB)

where:

ERP/EIRP = effective or equivalent radiated power, in dBm;

SA Read Value = measured transmitter power received by EMI receiver or spectrum analyzer, in dBm;

Correction Factor = total correction factor including cable loss, in dB;

During the test, the data of Correction Factor (dB) is added in the EMI receiver or spectrum analyzer, so SA Read Value (dBm) is the final values which contains the data of Correction Factor (dB).

The distance between the EUT and the test antenna shall be adequate to ensure that the measurements are performed in the radiated far-field. The maximum amplitude of the radiated output power must be found by employing a volume search comprising both the horizontal (azimuth) and vertical (elevation) planes. The polarization of the measurement antenna must also be matched with the EUT to determine the maximum amplitude. The procedures given in ANSI C63.26 for ensuring that the radiated amplitude is maximized shall be used.

6.4 Test Result

Max Radiated Power:
Please refer to appendix 1: Conducted Output Power
Test Result: Pass

7. Peak-To-Average Ratio(PAR) Of Transmitter

7.1 Block Diagram Of Test Setup

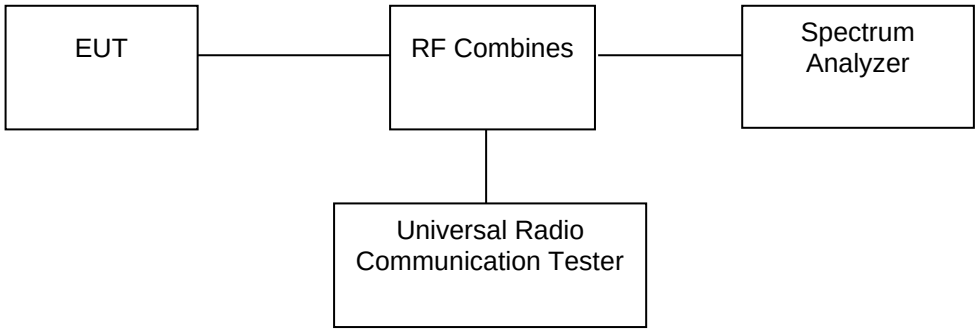

7.2 Limit

FCC § 2.1046 & 22.913(d) & 24.232(d) & 27.50(d) & 27.50(j) & 27.50(k)
In addition, when the transmitter power is measured in terms of average value, the peak-to-average power ratio (PAPR) of the transmitter shall not exceed 13 dB for more than 0.1% of the time using a signal corresponding to the highest PAPR during periods of continuous transmission.

According to 22.913(d),Measurement of the ERP of Cellular base transmitters and repeaters must be made using an average power measurement technique. The peak-to-average ratio (PAR) of the transmission must not exceed 13 dB.

According to FCC section 24.232(d), power measurements for transmissions by stations authorized under this section may be made either in accordance with a Commission-approved average power technique or in compliance with 24.232 (e) of this section. In both instances, equipment employed must be authorized in accordance with the provisions of § 24.51. In measuring transmissions in this band using an average power technique, the peak-to-average ratio (PAR) of the transmission may not exceed 13 dB.

FCC section 24.232(e), peak transmit power must be measured over any interval of continuous transmission using instrumentation calibrated in terms of an rms equivalent voltage. The measurement results shall be properly adjusted for any instrument limitations, such as detector response times, limited resolution bandwidth capability when compared to the emission bandwidth, sensitivity, etc., so as to obtain a true peak measurement for the emission in question over the full bandwidth of the channel.

According to FCC section 27.50(d) (5) & 27.50(j) & 27.50(k), in measuring transmissions in this band using an average power technique, the peak-to-average ratio (PAR) of the transmission may not exceed 13dB.

7.3 Test procedure

The inherent randomness of the power peaks in a noise-like signal and the wide bandwidths associated with modern technologies makes it difficult to quantify the peak power using traditional measurement techniques. Because the peak power of a noise-like signal is predictable only on a statistical basis, a statistical measurement of the peak power is preferred.

CCDF curves provide a means for characterizing the power peaks of a noise-like signal on a statistical basis. A CCDF curve depicts the probability of the peak signal amplitude exceeding the average power level. Most contemporary measurement instrumentation offers the capability to produce CCDF curves for a noise-like input signal.

See instrumentation-specific application literature for further guidance regarding use of the CCDF capability. The following guidelines are offered for performing a CCDF measurement.

a) Set resolution/measurement bandwidth ≥ OBW or specified reference bandwidth.

b) Set the number of counts to a value that stabilizes the measured CCDF curve.

c) Set the measurement interval as follows:

1) For continuous transmissions, set to the greater of [10 × (number of points in sweep) × (transmission symbol period)] or 1 ms.

2) For burst transmissions, employ an external trigger that is synchronized with the EUT burst timing sequence, or use the internal burst trigger with a trigger level that allows the burst to stabilize. Set the measurement interval to a time that is less than or equal to the burst duration.

3) If there are several carriers in a single antenna port, the peak power shall be determined for each individual carrier (by disabling the other carriers while measuring the required carrier) and the total peak power calculated from the sum of the individual carrier peak powers.

d) Record the maximum PAPR level associated with a probability of 0.1%.

e) The peak power level is calculated form the sum of the PAPR value from step d) to the measured average power.

7.4 Test Result

Please refer to Appendix 3: Peak-to-Average Ratio
Test Result: Pass

8. Emission Bandwidth

8.1 Block Diagram Of Test Setup

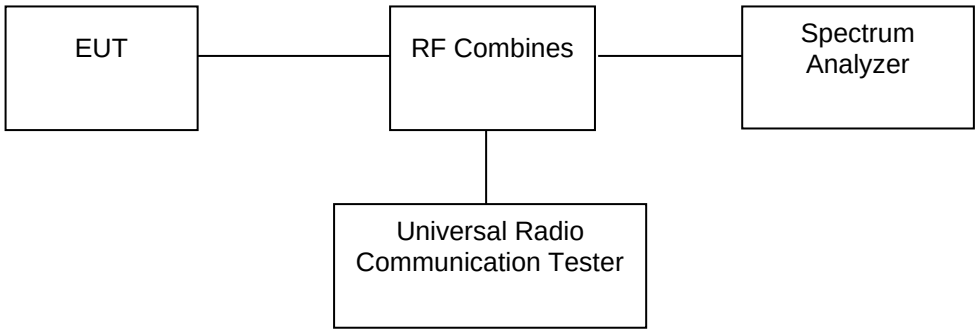

8.2 Standard Applicable

According to §22.917(b),The emission bandwidth is defined as the width of the signal between two points, one below the carrier center frequency and one above the carrier center frequency, outside of which all emissions are attenuated at least 26 dB below the transmitter power.

According to §24.238(b), The emission bandwidth is defined as the width of the signal between two points, one below the carrier center frequency and one above the carrier center frequency, outside of which all emissions are attenuated at least 26 dB below the transmitter power.

According to §27.53, The emission bandwidth is defined as the width of the signal between two points, one below the carrier center frequency and one above the carrier center frequency, outside of which all emissions are attenuated at least 26 dB below the transmitter power.

FCC § 2.1049

The occupied bandwidth is the frequency bandwidth such that, below its lower and above its upper frequency limits, the mean powers radiated are each equal to 0.5 percent of the total mean power radiated by a given emission.

Many of the individual rule parts specify a relative OBW in lieu of the 99% OBW. In such cases, the OBW is defined as the width of the signal between two points, one below the carrier center frequency and on above the carrier center frequency, outside of which all emissions are attenuated by at least X dB below the transmitter power, where the value of X is typically specified as 26.

8.3 Test procedure

The following procedure shall be used for measuring power bandwidth.

a) The spectrum analyzer center frequency is set to the nominal EUT channel center frequency. The frequency span for the spectrum analyzer shall be set wide enough to capture all modulation products including the emission skirts (i.e., two to five times the anticipated OBW).

b) The nominal IF filter bandwidth (3 dB RBW) shall be in the range of 1 to 5 % of the anticipated OBW, and the VBW shall be at least 3 times the RBW.

c) Set the reference level of the instrument as required to keep the signal from exceeding the maximum input mixer level for linear operation. In general, the peak of the spectral envelope must be at least 10log (OBW / RBW) below the reference level.

d) NOTE—Steps a) through c) may require iteration to adjust within the specified tolerances.

e) For -26 dB OBW, the dynamic range of the spectrum analyzer at the selected RBW shall be at least 10dB below the target "-X dB down" requirement, e.g. -26 dB OBW, the spectrum analyzer noise floor at the selected RBW shall be 36dB below the reference value.

f) Set the detection mode to peak, and the trace mode to max hold.

g) For 99% OBW, use the 99 % power bandwidth function of the spectrum analyzer (if available) and report the measured bandwidth.

If the instrument does not have a 99 % power bandwidth function, the trace data points are to be recovered and directly summed in linear power terms. The recovered amplitude data points, beginning at the lowest frequency, are placed in a running sum until 0.5 % of the total is reached; that frequency is recorded as the lower frequency. The process is repeated until 99.5 % of the total is reached; that frequency is recorded as the upper frequency. The 99 % power bandwidth is the difference between these two frequencies.

h) For -26 dB OBW, determine the reference value: Set the EUT to transmit a modulated signal. Allow the trace to stabilize. Set the spectrum analyzer marker to the highest level of the displayed trace (this is the reference value).

Determine the "-X dB down amplitude" as equal to (reference value -X). Alternatively, this calculation can be performed by the analyzer by using the marker-delta function.

Place two markers, one at the lowest and the other at the highest frequency of the envelope of the spectral display such that each marker is at or slightly below "-X dB down amplitude" determined in step g). If a marker is below this "-X dB down amplitude" value it shall be placed as close as possible to this value. The OBW is the positive frequency difference between the two markers.

i) The OBW shall be reported by providing plot(s) of the measuring instrument display. The frequency and amplitude axes and scale shall be clearly labeled. Tabular data may be reported in addition to the plot(s).

j) Change variable modulations, coding, or channel bandwidth settings, then repeat above test procedures.

8.4 Test Result

Please refer to Appendix 4: Occupied BandWidth
Test Result: Pass

9. Out of Band Emissions at Antenna Terminal

9.1 Block Diagram Of Test Setup

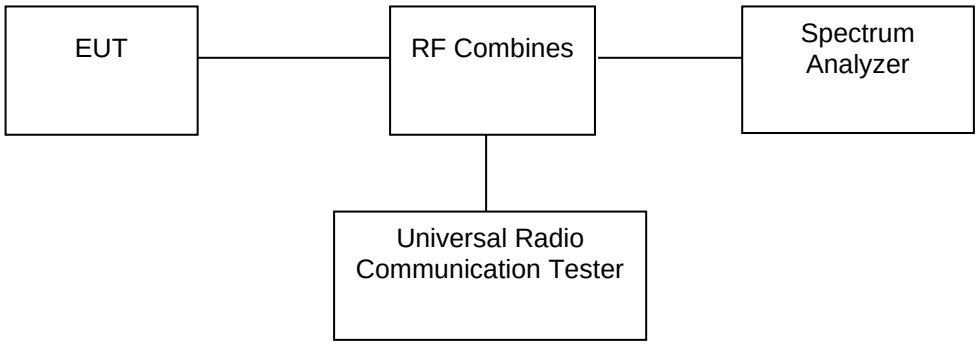

9.2 Limit

FCC § 22.917(a) & 24.238(a)

The power of any emission outside of the authorized operating frequency ranges must be attenuated below the transmitting power (P) by a factor of at least 43+10*log(P) dB.

FCC § 27.53(a) (4)

For mobile and portable stations operating in the 2305-2315MHz and 2350-2360MHz bands:

(1)By a factor of not less than: 43 + 10 log (P) dB on all frequencies between 2305 and 2320MHz and on all frequencies between 2345 and 2360MHz that are outside the licensed band(s) of operation, not less than 55 + 10 log (P) dB on all frequencies between 2320 and 2324MHz and on all frequencies between 2341 and 2345MHz, not less than 61 + 10 log (P) dB on all frequencies between 2324 and 2328MHz and on all frequencies between 2337 and 2341MHz, and not less than 67 + 10 log (P) dB on all frequencies between 2328 and 2337MHz.

(2)By a factor of not less than 43 + 10 log (P) dB on all frequencies between 2300 and 2305MHz, 55 + 10 log (P) dB on all frequencies between 2296 and 2300MHz, 61 + 10 log (P) dB on all frequencies between 2292 and 2296MHz, 67 + 10 log (P) dB on all frequencies between 2288 and 2292MHz, and 70 + 10 log (P) dB below 2288MHz.

(3)By a factor of not less than 43 + 10 log (P) dB on all frequencies between 2360 and 2365MHz, and not less than 70 + 10 log (P) dB above 2365MHz.

FCC § 27.53(c)

For operations in the 746–758 MHz band and the 776–788 MHz band, the power of any emission outside the licensee's frequency band(s) of operation shall be attenuated below the transmitter power (P) within the licensed band(s) of operation, measured in watts, in accordance with the following:

(1) On any frequency outside the 746–758 MHz band, the power of any emission shall be attenuated outside the band below the transmitter power (P) by at least 43 + 10 log (P) dB;

(2) On any frequency outside the 776–788 MHz band, the power of any emission shall be attenuated outside the band below the transmitter power (P) by at least 43 + 10 log (P) dB;
(3) On all frequencies between 763–775 MHz and 793–805 MHz, by a factor not less than 76 + 10 log (P) dB in a 6.25 kHz band segment, for base and fixed stations;
(4) On all frequencies between 763–775 MHz and 793–805 MHz, by a factor not less than 65 + 10 log (P) dB in a 6.25 kHz band segment, for mobile and portable stations;
(5) Compliance with the provisions of paragraphs (c)(1) and (c)(2) of this section is based on the use of measurement instrumentation employing a resolution bandwidth of 100 kHz or greater.
However, in the 100 kHz bands immediately outside and adjacent to the frequency block, a resolution Bandwidth of at least 30 kHz may be employed;
(6) Compliance with the provisions of paragraphs (c)(3) and (c)(4) of this section is based on the use of measurement instrumentation such that the reading taken with any resolution bandwidth setting should be adjusted to indicate spectral energy in a 6.25 kHz segment.
FCC § 27.53(f)
For operations in the 746–758 MHz, 775–788 MHz, and 805–806 MHz bands, emissions in the band 1559–1610 MHz shall be limited to - 70 dBW/MHz equivalent isotropically radiated power (EIRP) for wideband signals, and -80 dBW EIRP for discrete emissions of less than 700 Hz bandwidth. For the purpose of equipment authorization, a transmitter shall be tested with an antenna that is representative of the type that will be used with the equipment in normal operation.
FCC § 27.53(g)
For operations in the 600MHz band and the 698-746MHz band, the power of any emission outside a licensee’s frequency band(s) of operation shall be attenuated below the transmitter power (P) within the licensed band(s) of operation, measured in watts, by at least 43+10*log(P) dB. Compliance with this provision is based on the use of measurement instrumentation employing a resolution bandwidth of 100 kHz bands immediately outside and adjacent to a licensee’s frequency block, a resolution bandwidth of at least 30 kHz may be employed.
FCC § 27.53(h) (1)
Except as otherwise specified below, for operations in the 1695-1710 MHz, 1710-1755 MHz, 1755-1780 MHz, 1915-1920 MHz, 1995-2000 MHz, 2000-2020 MHz, 2110-2155 MHz, 2155-2180 MHz, and 2180-2200 bands, the power of any emission outside a licensee's frequency block shall be attenuated below the transmitter power (P) in watts by at least 43 + 10 log10 (P) dB.
FCC § 27.53(l) (2)
For mobile operations in the 3700-3980 MHz band, the conducted power of any emission outside the licensee's authorized bandwidth shall not exceed −13 dBm/MHz.
FCC § 27.53(m) (4)
For mobile digital stations (BRS and EBS stations), the attenuation factor shall be not less than:
• 40+10logP dB (−10 dBm, 100 nW) on all frequencies between the channel edge and 5 MHz from the channel edge.
• 43+10logP dB (−13 dBm, 50 nW) on all frequencies between 5 MHz and X MHz from the channel edge,

• 55+10logP dB (−25 dBm, 3 nW) on all frequencies more than X MHz from the channel edge, where X is the greater of 6 MHz or the actual emission bandwidth (26 dB).

In addition, the attenuation factor shall not be less that 43 + 10 log (P) dB on all frequencies between 2490.5 MHz and 2496 MHz and 55 + 10 log (P) dB at or below 2490.5 MHz. Mobile Satellite Service licensees operating on frequencies below 2495 MHz may also submit a documented interference complaint against BRS licensees operating on channel BRS Channel 1 on the same terms and conditions as adjacent channel BRS or EBS licensees.

FCC § 27.53(n) (2)

For mobile operations in the 3450-3550 MHz band, the conducted power of any emission outside the licensee's authorized bandwidth shall not exceed −13 dBm/MHz.

9.3 Test procedure

The RF output terminal of the transmitter was connected to the input of the spectrum analyzer via a suitable attenuation. The RBW of the spectrum analyzer was set to 100kHz and 1MHz for the scan frequency from 30MHz to 1GHz and the scan frequency from 1GHz to up to 10th harmonic.

9.4 Test Result

Please refer to Appendix 5: Band Edge & Appendix 6: Out-of-band Emissions
Test Result: Pass

10. Spurious Radiated Emissions

10.1 Block Diagram Of Test Setup

（A）Radiated Emission Test-Up Frequency Below 30MHz

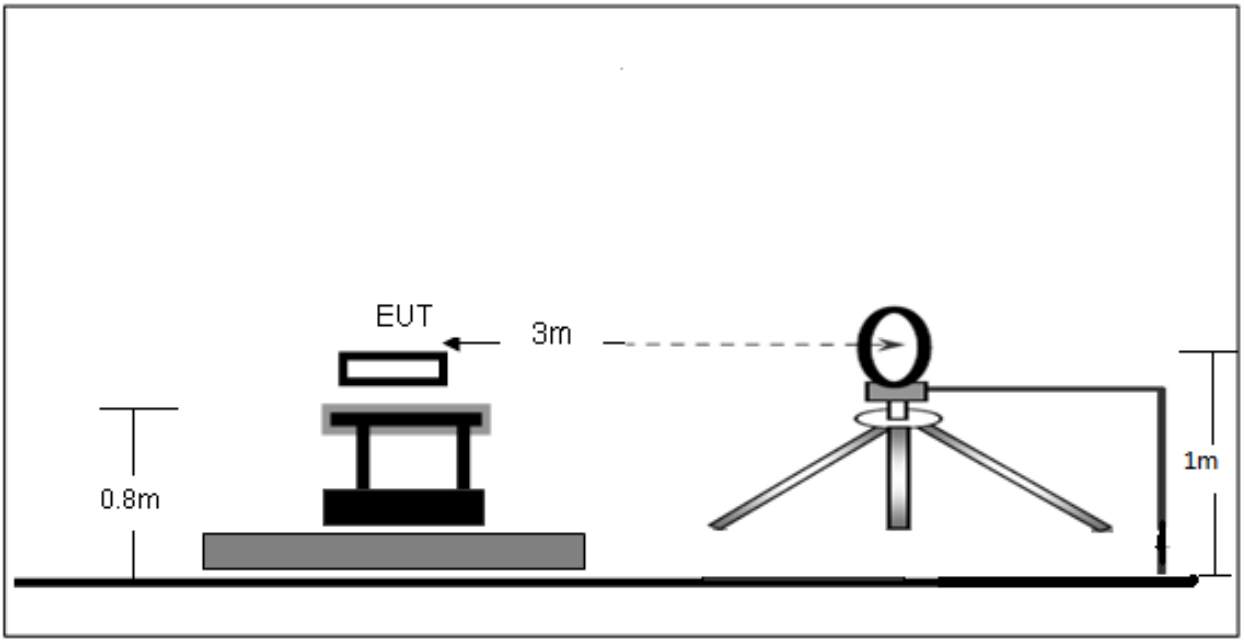

（B）Radiated Emission Test-Up Frequency 30MHz~1GHz

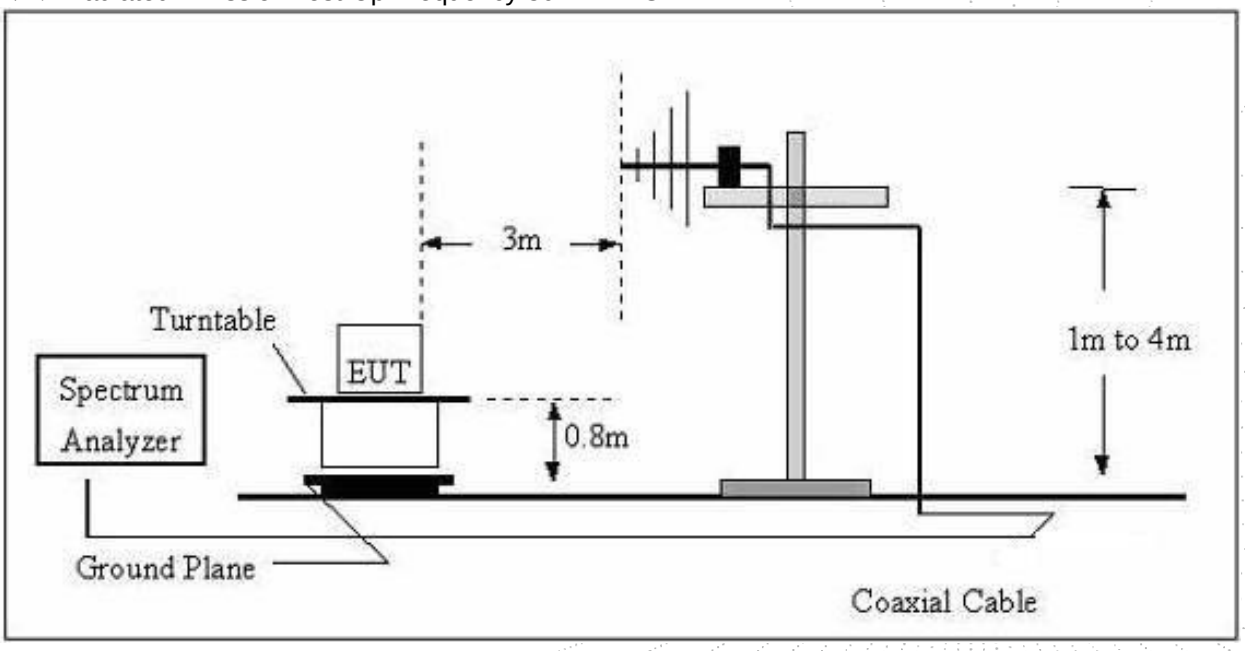

（C）Radiated Emission Test-Up Frequency Above 1GHz

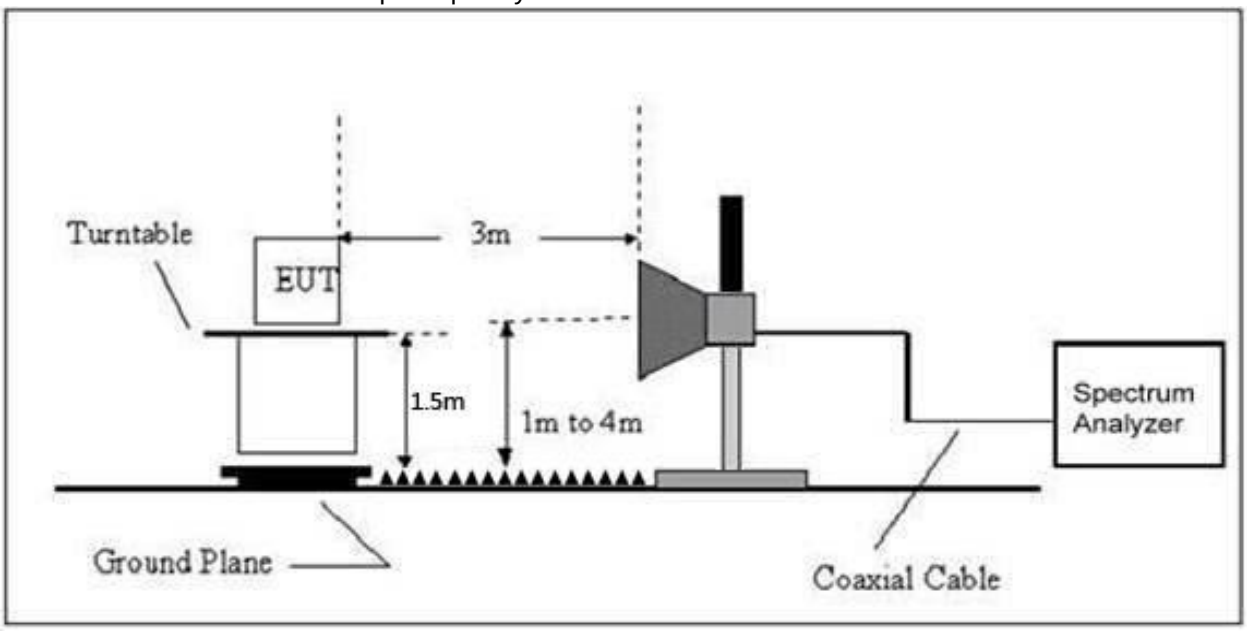

10.2 Limit

FCC § 22.917(a) & 24.238(a)

The power of any emission outside of the authorized operating frequency ranges must be attenuated below the transmitting power (P) by a factor of at least 43+10*log(P) dB.

FCC § 27.53(a) (4)

For mobile and portable stations operating in the 2305-2315MHz and 2350-2360MHz bands:

(1)By a factor of not less than: 43 + 10 log (P) dB on all frequencies between 2305 and 2320MHz and on all frequencies between 2345 and 2360MHz that are outside the licensed band(s) of operation, not less than 55 + 10 log (P) dB on all frequencies between 2320 and 2324MHz and on all frequencies between 2341 and 2345MHz, not less than 61 + 10 log (P) dB on all frequencies between 2324 and 2328MHz and on all frequencies between 2337 and 2341MHz, and not less than 67 + 10 log (P) dB on all frequencies between 2328 and 2337MHz.

(2)By a factor of not less than 43 + 10 log (P) dB on all frequencies between 2300 and 2305MHz, 55 + 10 log (P) dB on all frequencies between 2296 and 2300MHz, 61 + 10 log (P) dB on all frequencies between 2292 and 2296MHz, 67 + 10 log (P) dB on all frequencies between 2288 and 2292MHz, and 70 + 10 log (P) dB below 2288MHz.

(3)By a factor of not less than 43 + 10 log (P) dB on all frequencies between 2360 and 2365MHz, and not less than 70 + 10 log (P) dB above 2365MHz.

FCC § 27.53(c)

For operations in the 746–758 MHz band and the 776–788 MHz band, the power of any emission outside the licensee's frequency band(s) of operation shall be attenuated below the transmitter power (P) within

the licensed band(s) of operation, measured in watts, in accordance with the following:
(1) On any frequency outside the 746–758 MHz band, the power of any emission shall be attenuated outside the band below the transmitter power (P) by at least 43 + 10 log (P) dB;
(2) On any frequency outside the 776–788 MHz band, the power of any emission shall be attenuated outside the band below the transmitter power (P) by at least 43 + 10 log (P) dB;
(3) On all frequencies between 763–775 MHz and 793–805 MHz, by a factor not less than 76 + 10 log (P) dB in a 6.25 kHz band segment, for base and fixed stations;
(4) On all frequencies between 763–775 MHz and 793–805 MHz, by a factor not less than 65 + 10 log (P) dB in a 6.25 kHz band segment, for mobile and portable stations;
(5) Compliance with the provisions of paragraphs (c)(1) and (c)(2) of this section is based on the use of measurement instrumentation employing a resolution bandwidth of 100 kHz or greater.
However, in the 100 kHz bands immediately outside and adjacent to the frequency block, a resolution Bandwidth of at least 30 kHz may be employed;
(6) Compliance with the provisions of paragraphs (c)(3) and (c)(4) of this section is based on the use of measurement instrumentation such that the reading taken with any resolution bandwidth setting should be adjusted to indicate spectral energy in a 6.25 kHz segment.
FCC § 27.53(f)
For operations in the 746–758 MHz, 775–788 MHz, and 805–806 MHz bands, emissions in the band 1559–1610 MHz shall be limited to - 70 dBW/MHz equivalent isotropically radiated power (EIRP) for wideband signals, and -80 dBW EIRP for discrete emissions of less than 700 Hz bandwidth. For the purpose of equipment authorization, a transmitter shall be tested with an antenna that is representative of the type that will be used with the equipment in normal operation.
FCC § 27.53(g)
For operations in the 600MHz band and the 698-746MHz band, the power of any emission outside a licensee’s frequency band(s) of operation shall be attenuated below the transmitter power (P) within the licensed band(s) of operation, measured in watts, by at least 43+10*log(P) dB. Compliance with this provision is based on the use of measurement instrumentation employing a resolution bandwidth of 100 kHz bands immediately outside and adjacent to a licensee’s frequency block, a resolution bandwidth of at least 30 kHz may be employed.
FCC § 27.53(h) (1)
Except as otherwise specified below, for operations in the 1695-1710 MHz, 1710-1755 MHz, 1755-1780 MHz, 1915-1920 MHz, 1995-2000 MHz, 2000-2020 MHz, 2110-2155 MHz, 2155-2180 MHz, and 2180-2200 bands, the power of any emission outside a licensee's frequency block shall be attenuated below the transmitter power (P) in watts by at least 43 + 10 log10 (P) dB.
FCC § 27.53(l) (2)
For mobile operations in the 3700-3980 MHz band, the conducted power of any emission outside the licensee's authorized bandwidth shall not exceed −13 dBm/MHz.
FCC § 27.53(m) (4)
For mobile digital stations (BRS and EBS stations), the attenuation factor shall be not less than:

• 40+10logP dB (−10 dBm, 100 nW) on all frequencies between the channel edge and 5 MHz from the channel edge.

• 43+10logP dB (−13 dBm, 50 nW) on all frequencies between 5 MHz and X MHz from the channel edge,

• 55+10logP dB (−25 dBm, 3 nW) on all frequencies more than X MHz from the channel edge, where X is the greater of 6 MHz or the actual emission bandwidth (26 dB).

In addition, the attenuation factor shall not be less that 43 + 10 log (P) dB on all frequencies between 2490.5 MHz and 2496 MHz and 55 + 10 log (P) dB at or below 2490.5 MHz. Mobile Satellite Service licensees operating on frequencies below 2495 MHz may also submit a documented interference complaint against BRS licensees operating on channel BRS Channel 1 on the same terms and conditions as adjacent channel BRS or EBS licensees.

FCC § 27.53(n) (2)

For mobile operations in the 3450-3550 MHz band, the conducted power of any emission outside the licensee's authorized bandwidth shall not exceed −13 dBm/MHz.

10.3 Test procedure

1. The setup of EUT is according with per ANSI/TIA Standard 603D and ANSI C63.4-2014 measurement procedure.

2. The measurement antenna was placed at a distance of 3 meters from the EUT. During the tests, the antenna height and polarization as well as EUT azimuth were varied in order to identify the maximum level of emissions from the EUT. The test was performed by placing the EUT on 3-orthogonal axis.

3. The frequency range up to tenth harmonic of the fundamental frequency was investigated.

4. Remove the EUT and replace it with substitution antenna. A signal generator was connected to the substitution antenna by a non-radiating cable. The absolute levels of the spurious emissions were measured by the substitution.

Spurious attenuation limit in dB

=43+10 Log10 (power out in Watts)

10.4 Test Result

For FDD-LTE Band 2 Mode(5MHz)

Frequency (MHz)	Reading (dBm)	Correct dB	Result (dBm)	Limit (dBm)	Margin (dB)	Polar H/V
Low Channel (1852.5MHz)						
88.64	-13.45	-30.60	-44.05	-13.00	-31.05	H
3705.00	-14.78	-22.19	-36.97	-13.00	-23.97	H
5557.50	-14.46	-19.32	-33.78	-13.00	-20.78	H
88.64	-11.33	-30.60	-41.93	-13.00	-28.93	V
3705.00	-6.05	-22.19	-28.24	-13.00	-15.24	V
5557.50	-10.68	-19.32	-30.00	-13.00	-17.00	V
Middle Channel (1880MHz)						
88.64	-11.75	-30.60	-42.35	-13.00	-29.35	H
3760.00	-11.76	-22.08	-33.84	-13.00	-20.84	H
5640.00	-13.56	-19.28	-32.84	-13.00	-19.84	H
88.64	-9.20	-30.60	-39.80	-13.00	-26.80	V
3760.00	-5.02	-22.08	-27.10	-13.00	-14.10	V
5640.00	-10.01	-19.28	-29.29	-13.00	-16.29	V
High Channel (1907.5MHz)						
88.64	-10.17	-30.60	-40.77	-13.00	-27.77	H
3815.00	-9.52	-21.97	-31.49	-13.00	-18.49	H
5722.50	-13.09	-19.24	-32.33	-13.00	-19.33	H
88.64	-13.11	-30.60	-43.71	-13.00	-30.71	V
3815.00	-8.64	-21.97	-30.61	-13.00	-17.61	V
5722.50	-7.71	-19.24	-26.95	-13.00	-13.95	V

For FDD-LTE Band 4 Mode(1.4MHz)

Frequency (MHz)	Reading (dBm)	Correct dB	Result (dBm)	Limit (dBm)	Margin (dB)	Polar H/V
Low Channel (1710.7MHz)						
88.64	-9.70	-30.60	-40.30	-13.00	-27.30	H
3421.40	-10.16	-22.76	-32.92	-13.00	-19.92	H
5132.10	-12.97	-19.53	-32.50	-13.00	-19.50	H
88.64	-13.59	-30.60	-44.19	-13.00	-31.19	V
3421.40	-5.08	-22.76	-27.84	-13.00	-14.84	V
5132.10	-11.86	-19.53	-31.39	-13.00	-18.39	V
Middle Channel (1732.5MHz)						
88.64	-11.16	-30.60	-41.76	-13.00	-28.76	H
3465.00	-11.61	-22.67	-34.28	-13.00	-21.28	H
5197.50	-14.40	-19.51	-33.91	-13.00	-20.91	H
88.64	-9.13	-30.60	-39.73	-13.00	-26.73	V
3465.00	-4.53	-22.67	-27.20	-13.00	-14.20	V
5197.50	-7.33	-19.51	-26.84	-13.00	-13.84	V
High Channel (1754.3MHz)						
88.64	-11.06	-30.60	-41.66	-13.00	-28.66	H
3508.60	-14.07	-14.99	-29.06	-13.00	-16.06	H
5262.90	-14.70	-9.95	-24.65	-13.00	-11.65	H
88.64	-9.92	-30.60	-40.52	-13.00	-27.52	V
3508.60	-6.82	-14.99	-21.81	-13.00	-8.81	V
5262.90	-11.51	-9.95	-21.46	-13.00	-8.46	V

For FDD-LTE Band 5 Mode(1.4MHz)

Frequency (MHz)	Reading (dBm)	Correct dB	Result (dBm)	Limit (dBm)	Margin (dB)	Polar H/V
Low Channel (824.7MHz)						
88.64	-14.34	-30.60	-44.94	-13.00	-31.94	H
1649.40	-12.45	-27.37	-39.82	-13.00	-26.82	H
2474.10	-12.77	-25.18	-37.95	-13.00	-24.95	H
88.64	-13.33	-30.60	-43.93	-13.00	-30.93	V
1649.40	-7.39	-27.37	-34.76	-13.00	-21.76	V
2474.10	-12.00	-25.18	-37.18	-13.00	-24.18	V
Middle Channel (836.5MHz)						
88.64	-9.51	-30.60	-40.11	-13.00	-27.11	H
1673.00	-9.68	-27.32	-37.00	-13.00	-24.00	H
2509.50	-10.22	-25.07	-35.29	-13.00	-22.29	H
88.64	-11.38	-30.60	-41.98	-13.00	-28.98	V
1673.00	-7.00	-27.32	-34.32	-13.00	-21.32	V
2509.50	-11.19	-25.07	-36.26	-13.00	-23.26	V
High Channel (848.3MHz)						
88.64	-12.04	-30.60	-42.64	-13.00	-29.64	H
1696.60	-10.41	-27.27	-37.68	-13.00	-24.68	H
2544.90	-15.31	-24.97	-40.28	-13.00	-27.28	H
88.64	-11.93	-30.60	-42.53	-13.00	-29.53	V
1696.60	-7.80	-27.27	-35.07	-13.00	-22.07	V
2544.90	-7.04	-24.97	-32.01	-13.00	-19.01	V

For FDD-LTE Band 7 Mode(5MHz)

Frequency (MHz)	Reading (dBm)	Correct dB	Result (dBm)	Limit (dBm)	Margin (dB)	Polar H/V
Low Channel (2502.5MHz)						
88.64	-13.75	-30.60	-44.35	-25.00	-19.35	H
5005.00	-22.73	-19.60	-42.33	-25.00	-17.33	H
7507.50	-25.27	-13.38	-38.65	-25.00	-13.65	H
88.64	-11.76	-30.60	-42.36	-25.00	-17.36	V
5005.00	-16.99	-19.60	-36.59	-25.00	-11.59	V
7507.50	-21.01	-13.38	-34.39	-25.00	-9.39	V
Middle Channel (2535MHz)						
88.64	-10.39	-30.60	-40.99	-25.00	-15.99	H
5070.00	-23.86	-19.57	-43.43	-25.00	-18.43	H
7605.00	-22.68	-13.11	-35.79	-25.00	-10.79	H
88.64	-10.39	-30.60	-40.99	-25.00	-15.99	V
5070.00	-16.36	-19.57	-35.93	-25.00	-10.93	V
7605.00	-22.35	-13.11	-35.46	-25.00	-10.46	V
High Channel (2567.5MHz)						
88.64	-9.41	-30.60	-40.01	-25.00	-15.01	H
5135.00	-22.09	-19.53	-41.62	-25.00	-16.62	H
7702.50	-22.52	-12.83	-35.35	-25.00	-10.35	H
88.64	-12.76	-30.60	-43.36	-25.00	-18.36	V
5135.00	-17.56	-19.53	-37.09	-25.00	-12.09	V
7702.50	-21.84	-12.83	-34.67	-25.00	-9.67	V

For FDD-LTE Band 66 Mode(1.4MHz)

Frequency (MHz)	Reading (dBm)	Correct dB	Result (dBm)	Limit (dBm)	Margin (dB)	Polar H/V
Low Channel (1710.7MHz)						
88.64	-12.27	-30.60	-42.87	-13.00	-29.87	H
3421.40	-9.78	-22.76	-32.54	-13.00	-19.54	H
5132.10	-14.63	-19.53	-34.16	-13.00	-21.16	H
88.64	-10.81	-30.60	-41.41	-13.00	-28.41	V
3421.40	-5.26	-22.76	-28.02	-13.00	-15.02	V
5132.10	-8.88	-19.53	-28.41	-13.00	-15.41	V
Middle Channel (1745MHz)						
88.64	-9.79	-30.60	-40.39	-13.00	-27.39	H
3490.00	-9.99	-22.62	-32.61	-13.00	-19.61	H
5235.00	-12.00	-19.48	-31.48	-13.00	-18.48	H
88.64	-8.86	-30.60	-39.46	-13.00	-26.46	V
3490.00	-8.84	-22.62	-31.46	-13.00	-18.46	V
5235.00	-12.23	-19.48	-31.71	-13.00	-18.71	V
High Channel (1779.3MHz)						
88.64	-11.82	-30.60	-42.42	-13.00	-29.42	H
3558.60	-14.77	-22.48	-37.25	-13.00	-24.25	H
5337.90	-12.74	-19.43	-32.17	-13.00	-19.17	H
88.64	-9.96	-30.60	-40.56	-13.00	-27.56	V
3558.60	-7.06	-22.48	-29.54	-13.00	-16.54	V
5337.90	-8.97	-19.43	-28.40	-13.00	-15.40	V

Note: Result=Reading+ Correct, Margin= Result- Limit
Note: Testing is carried out with frequency rang 9kHz to the tenth harmonics, other than listedin the table above are attenuated more than 20dB below the permissible limits or the field strength is too small to be measured.

11. Frequency Stability

11.1 Block Diagram Of Test Setup

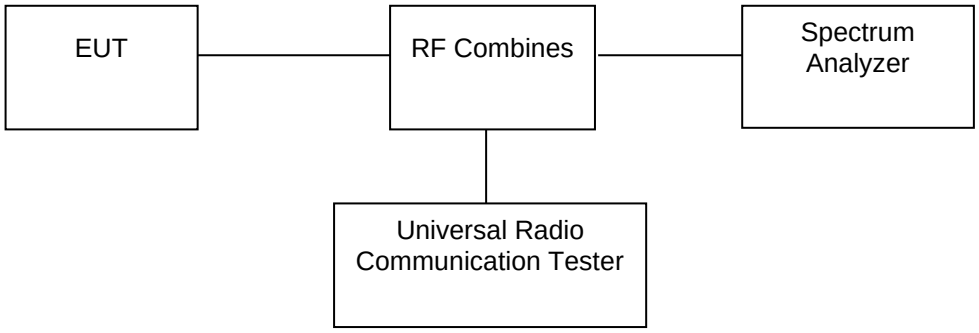

11.2 Limit

±2.5 ppm

11.3 Test procedure

Test Procedures for Temperature Variation

1. The testing follows FCC KDB 971168 D01v03 Section 9.0.
2. The EUT was set up in the thermal chamber and connected with the system simulator.
3. With power OFF, the temperature was decreased to -30°C and the EUT was stabilized before testing. Power was applied and the maximum change in frequency was recorded within one minute.
4. With power OFF, the temperature was raised in 10°C steps up to 50°C. The EUT was stabilized at each step for at least half an hour. Power was applied and the maximum frequency change was recorded within one minute.

Test Procedures for Voltage Variation

1. The testing follows FCC KDB 971168 D01v03 Section 9.0.
2. The EUT was placed in a temperature chamber at 25±5° C and connected with the system simulator.
3. The power supply voltage to the EUT was varied from BEP to 115% of the nominal value measured at the input to the EUT.
4. The variation in frequency was measured for the worst case.
5. The worst case(worst bandwidth) for frequency stability reported in the Test Data.

The worst bandwidth is as follow:

1.4M is for LTE Band 2, 1.4M is for LTE Band 4,

1.4M is for LTE Band 5, 1.4M is for LTE Band 12,

5M is for LTE Band 13, 1.4M is for LTE Band 66, 5M is for LTE Band 71

11.4 Test Result

Please refer to Appendix 2: Frequency Stability
Test Result: Pass

12. EUT Test Setup Photographs

Radiated Measurement Photos

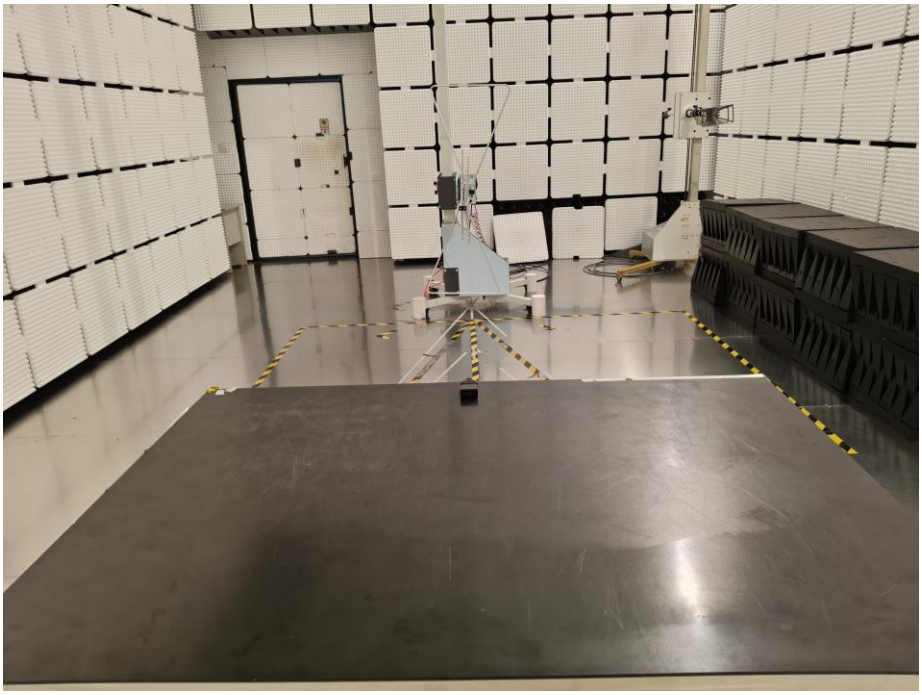

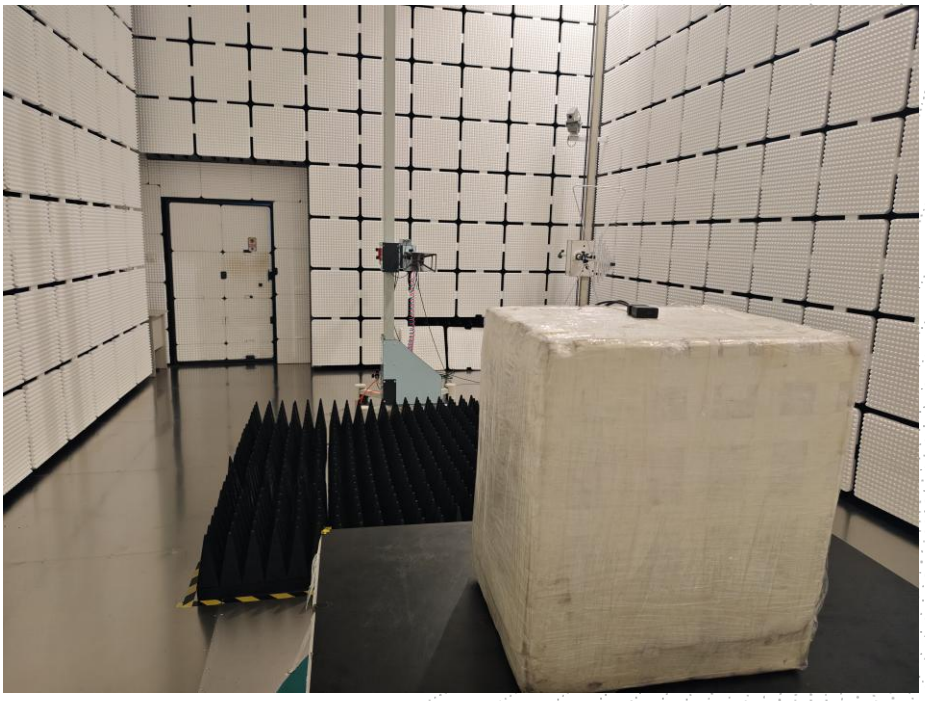

STATEMENT

1. The equipment lists are traceable to the International System of Units (SI)

2. The test report can not be partially copied unless prior written approval is issued from our lab.

3. The test report is invalid without the "special seal for inspection and testing".

4. The test report is invalid without the signature of the approver.

5. The test process and test result is only related to the Unit Under Test.

6. Sample information is provided by the client and the laboratory is not responsible for its authenticity.

7. The quality system of our laboratory is in accordance with ISO/IEC 17025:2017.

8. If there is any objection to this test report, the client should inform issuing laboratory within 15 days from the date of receiving test report.

Address:
Room 101M, Unit 1, Building1, Pengyuan, No.18, Lilang Road, Shanglilang, Nanwan Subdistrict, Longgang District, Shenzhen, Guangdong, China

TEL: 400-788-9558

P.C.: 518103

FAX: 0755-33229357

Website: http://www.chnbctc.com

Consultation E-mail: bctc@bctc-lab.com.cn

Complaint/Advice E-mail: advice@bctc-lab.com.cn

※※※※※ END ※※※※※