尺寸：148*210MM
颜色：单黑
材料：105G铜版纸
413.P27XXXXX-03

PHEANOO®

P27

Audio Product

USER MANUAL

Important Safety Instruction

Thank you for purchasing the P27 Soundbar. Please read this user manual carefully and keep for future reference.

Warning

Caution:

To reduce the risk of electric shock, do not dismantle the product and do not expose the apparatus to rain or moisture. No user-serviceable parts inside.
Refer servicing to qualified personnel only

The lightning flash within an equilateral triangle is intended to alert you to the presence of uninsulated dangerous voltage within the product's enclosure that may be of sufficient magnitude to constitute an electric shock to a person or persons.

Important! This symbol alerts you to read and observe important warnings and instructions on the unit or in this manual.

Notice:

This appliance is not intended for use by persons (including children) with reduced physical sensory or mental capabilities, or lack of experience and knowledge, unless they have been given supervision or instruction concerning use of the appliance by a person responsible for their safety. Children should be supervised to ensure that they do not play with the appliance.

1. To prevent possible hearing damage, do not listen at high volume levels for long time periods or a sudden high volume level.

2. Never use the device unsupervised! Switch off the device whenever you are not using it, even if not using it only for a short while.
3. The appliance is not intended to be operated by means of an external timer or separate remote control system.
4. If the supply cord is damaged, it must be replaced by the manufacturer, its service agent or similarly qualified persons in order to avoid a hazard.
5. Before operating this system, check the voltage of this system to see if it is identical to the voltage of your local power supply.

6. The unit should not be impeded by covering the ventilation opening with items such as newspaper, table-cloths, curtains etc. Make sure that there are at least 20 cm of space above and at least 5 cm of space on each side of the unit.
7. The apparatus must not be exposed to dripping or splashing and that objects filled with liquids, such as vases, must not be placed on the apparatus.
8. To prevent fire or shock hazard, do not expose this equipment to direct heat, rain, moisture or dust.
9. Do not locate this unit near any water sources e.g. taps, bathtubs, washing machines or swimming pools. Ensure that you place the unit on a dry, stable surface.
10. Do not place this unit close to a strong magnetic field.
11. Do not place the unit on a amplifier or receiver.
12. Do not place this unit in a damp area as the moisture will affect the life of electric components.
13. Do not attempt to clean the unit with chemical solvents as this might damage the finish. Wipe with a clean, dry or slightly damp cloth.
14. When removing the power plug from the wall outlet, always pull directly on the plug, never pull on the cord.
15. Depending on the electromagnetic waves used by a television broadcast, if a TV is turned on near this unit while it is also on, lines might appear on the LED TV. Neither this unit nor the TV is malfunctioning. If you see such lines, keep this unit well away from the TV set.
16. The mains plug is used to disconnect the device, the disconnected device should remain readily operable.

Important Safety Instructions

1. Read these instructions. Keep these instructions. Follow all instructions. Heed all warnings.
2. Do not use this apparatus near water.
3. Clean only with dry cloth.
4. Do not block any ventilation openings. Install in accordance with the manufacturer's instructions.
5. Do not install near any heat sources such as radiators, heaters, stoves, or other apparatus (including amplifiers) that produce heat.
6. Do not defeat the safety purpose of the polarized or grounding-type plug. A polarized plug has two blades with one wider than the other.
7. Protect the power cord from being walked on or pinched particularly at plugs, convenience receptacles or at the point where they exit from the apparatus.
8. Only use attachments/accessories specified by the manufacturer.
9. Unplug this apparatus during lightning storms or when unused for long periods of time.

10. Refer all servicing to qualified service personal. Servicing is required when the apparatus has been damage in any way, for example, when the power-supply cord or plug is damaged, liquid has been spilled or objects have fallen into the apparatus, the apparatus has been exposed to rain or moisture, does not operate normally, or has been dropped.

11. The AC plug is used to disconnect the device, the disconnected device should remain readily operable. In order to disconnect the apparatus from the AC power completely, the AC plug must be removed from the AC outlet completely.

Preparation for Use

Unpacking and Set Up

•Remove the Sound bar from the carton and remove all packing material from the Sound bar. Save the packing material, if possible, in case the Sound bar ever needs to be serviced or transported. The original carton and packing material is the only safe way to pack your Sound bar to protect it from damage in transit.

•Remove any descriptive labels or stickers on the front or top of the cabinet. Do not remove any labels or stickers from the back or bottom of the cabinet.

•Place your Sound bar on a level surface such as a table, desk or shelf, convenient to an AC outlet, out of direct sunlight, and away from sources of excess heat, dirt, dust, moisture, humidity, or vibration.

•Unwind the Line cord connecting the AC adapter and extend it to its full length.

Protect Your Furniture

This model is equipped with non-skid rubber 'feet' to prevent the product from moving when you operate the controls. These 'feet' are made from non-migrating rubber material specially formulated to avoid leaving any marks or stains on your furniture. However certain types of oil based furniture polishes, wood preservatives, or cleaning sprays may cause the rubber 'feet' to soften, and leave marks or a rubber residue on the furniture. To prevent any damage to your furniture we strongly recommend that you purchase small self-adhesive felt pads, available at hardware stores and home improvement center everywhere, and apply these pads to the bottom of the rubber 'feet' before you place the unit.

Power Source

This sound bar is designed to operate on normal AC Power source. For Europe, it works only under SMPS 110V-240V～50hz/60Hz. Do not attempt to operate the Sound bar on any other power source. You could cause damage to the Sound bar that is not covered by your warranty.

Important Notes

• This sound bar was especially developed for LED/LCD/Plasma TV's: It should not be used in combination with CRTTV's (Cathode Ray Tube TV's) in order to avoid image interference.

• Safety and operating instruction manual should be retained for future reference.

• The apparatus should not be exposed to dripping, splashing or placed in a humid atmosphere such as a bathroom.

• Do not install the product in the following areas:

• Places exposed to direct sunlight or close to radiators.

• On top of other stereo equipment that radiate too much heat -Blocking ventilation or in a dusty area.

• Areas where there is constant vibration.

• Humid or moist places.

• Do not place near candles or other flames.

• Operate the product only as instructed in this manual.

• Before turning on the power for the first time, make sure the sound bar is plugged to power outlet.

• For safety reasons, do not remove any covers or attempt to gain access to the inside of the product. Refer any servicing to qualified personnel.

• Do not attempt to remove any screws, or open the casing of the unit; there are no user serviceable parts inside. Refer all servicing to qualified service personnel.

Product Diagram

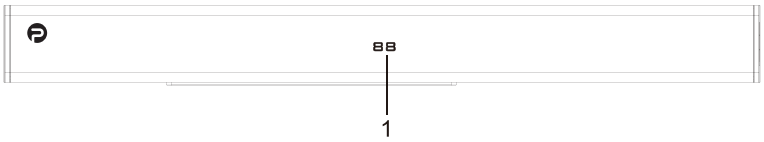

BACK VIEW

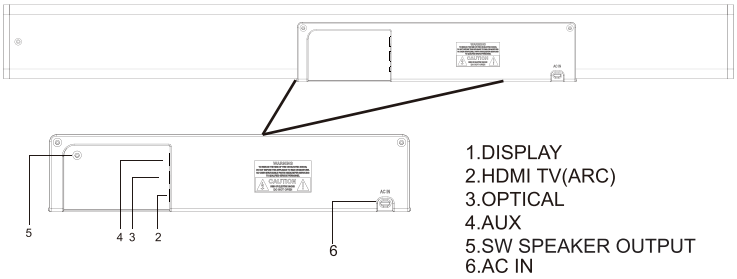

SIDE VIEW

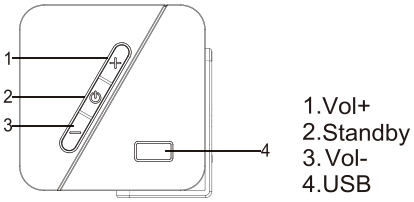

SUBWOOFER VIEW

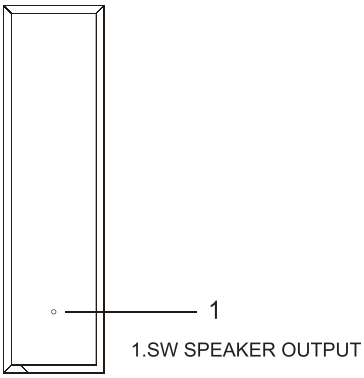

Remote Control

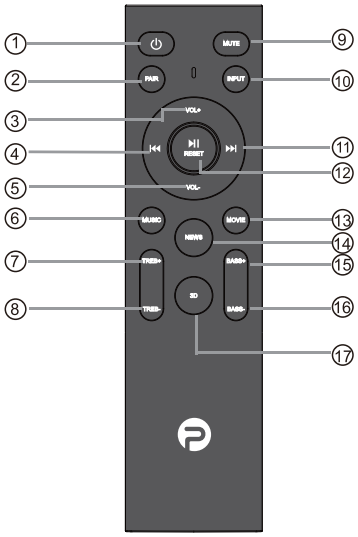

1. ⏻: Standby mode for power on/off.
2. PAIR: Connect or disconnect to the pairing device. (Press the button more than 2 seconds).
3. Volume+: Master volume up
4. ⏮ : Pre button: Previous program (Only work under USB & BT mode of smartphone).
5. Volume - : Master volume down
6. MUSIC: Select the Music EQ effect.
7. TR+: Treble volume up.
8. TR-: Treble volume down.
9. MUTE: Mute mode.
10. INPUT: Input mode(AUX/USB/HDMI TV(ARC)/OPT/BT).
11. ⏭: Next button: Next program. (Only work under USB & BT mode of smartphone).
12. ⏯: Play/Pause (Only work under USB & BT mode of smartphone).
13. MOVIE: Select the Movie EQ effect.
14. NEWS: Select the News EQ effect .
15. Bass +
16. Bass -
17. 3D: Select the 3D EQ effect.

Positioning the Sound Bar

Place on a flat Surface

Place the sound bar horizontally on a flat surface such as a TV unit or shelves and align it centrally with the TV screen. Allow some space between the speaker and the wall. Don't place inside a cabinet or an a walled shelf. Follow this guidance for best sound output and good airflow around the sound bar.

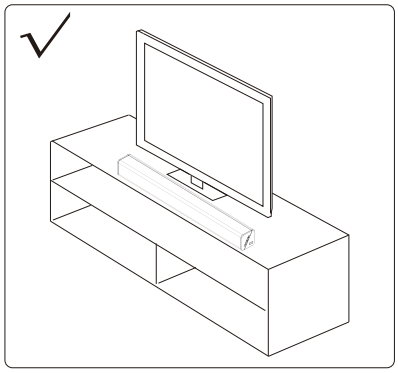

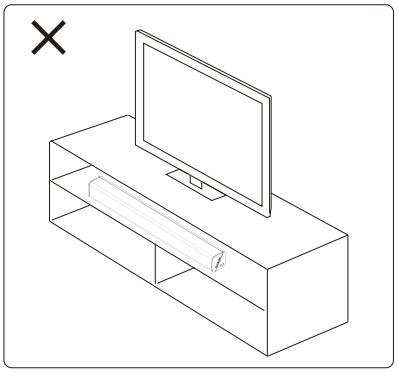

Mount on the wall

WARNING: If you don't feel confident to correctly and securely wall-mount the sound bar, Seek the assistance of an experienced person of professional.

Install the speaker on a vertical, fast, reinforced area of wall. For plaster walls, it is recommended to screw into wall studs for greater security. For optimum performance, allow at least 25mm/1''distance between the sound bar and the TV.

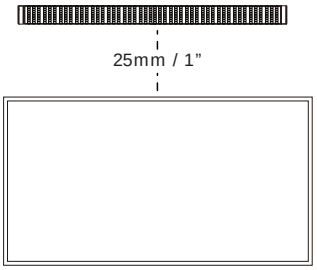

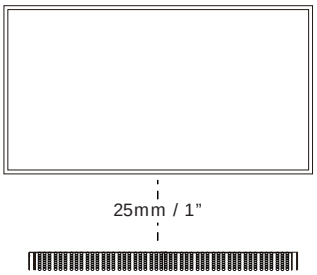

Follow below steps to mount the sound bar on the wall

1. Make 2 holes on the wall with distance same as the wall bracket on the soundbar
2. Put the plastic anchors onto the wall and secure the screws to the plastic clip, do not tighten the screws all the way make sure leave some space
3. Attached the 2 EVA pads onto the wall mount backet. This will make sure that there is enough room between the wall and the soundbar outlet, minimum 15mm
4. Once the screws securely fastened, hang the sound bar over by inserting the screws onto the wall mount bracket

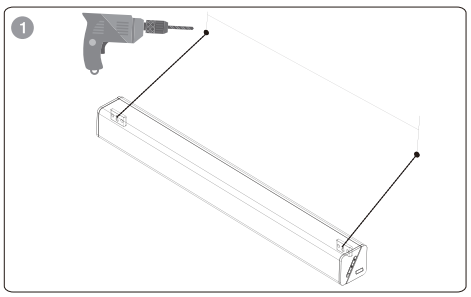

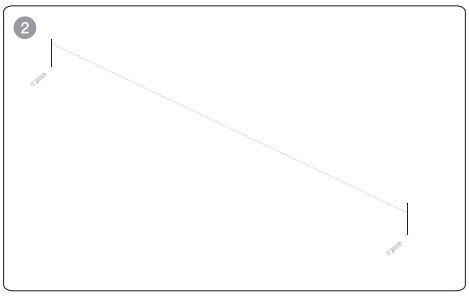

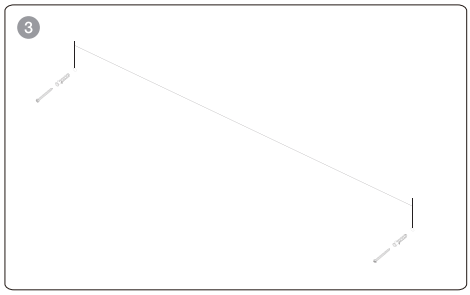

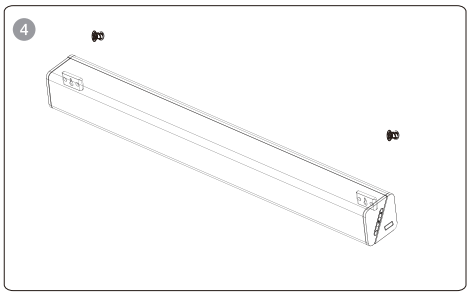

OPERATE INSTRUCTIONS

Setting the Soundbar

1: Plug in the power cord and the display will light up (Standby mode)

2: Switch on the soundbar by using power button on soundbar or by using STANDBY button on remote. After switching on, the default input mode will appear on display

3: Input mode can be changed by pressing the power button again or by using the INPUT button on remote

4:Below are input mode names appearing in the soundbar display:

bt -Bluetooth Pairing mode, AU-AUX mode, OP-Optical mode, Hd -HDMI mode, US -USB mode,

Powering On/Off

5. Plug the sound bar into a wall outlet, it will automatically enter standby mode

6. Short-press the multi-function button to turn on the sound bar

7. To turn off, press and hold the multi-function button for 2 seconds or unplug from wall outlet

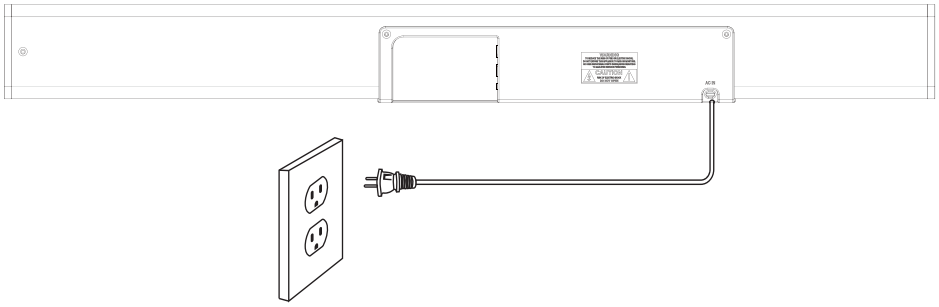

Playing Audio via BT Connection

1. Turn on sound bar and then short-press the multi-function button to switch to BT mode and the LED will show

2. Activate the pairing function on your phone of other compatible device and select“ **P27** ”

3. When successfully paired, you will hear a tone and the LED Display will stay on

4. The remote control includes BT mode playback controls

Notes:

• If your Pairing device Switched off or Manual disconnected, the sound bar will automatically enter pairing mode

• If the connected device is switched off or manual disconnected, the sound bar will automatically enter pairing successfully connected device will be re-established once you re-enter wireless range(10 meters). to connect to other devices, repeat the above pairing steps

• There is no automatic shutdown in pairing mode. The sound bar will remain in pairing mode even if no device is paired, so switch off if not in use

AUX mode

- Connect the sound bar to your PC, tablet, smartphone, TV, of other device using the included audio cable short-press the multi-function button to switch to audio input mode with theLED Display lit up (AU)
- In this mode, playback can only be controlled on your connected device

Note: For some computers, you may need to access the audio control panel to manually set the sound bar as below picture

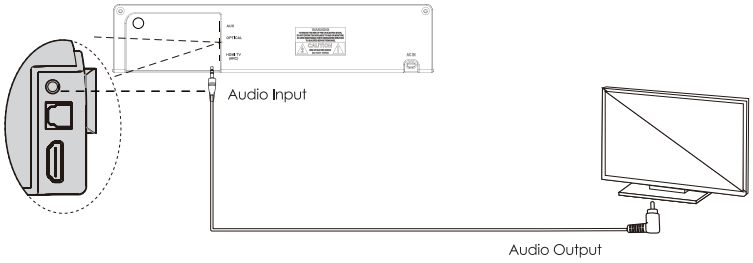

Playing Audio via USB Port

The sound bar automatically switches to USB input mode with the LED display(US)when a USB flash drive is inserted (this mode isn't selectable on the sound bar or remote control unless a USB flash drive is connected).

1. Ensure that your USB flash drive contains MP3 or WMA audio files (other file types not supported)

2. Connect the USB flash drive to the USB port on the sound bar (or your own USB extension cable connected to the USB port); music will automatically play

3. The remote control includes USB input mode playback controls

Optical Mode

Use this operating mode to play music from the optical digital input for example from a TV on your soundbar (A).
The TV must have an optical digital output. Use the optical cable supplied to make the connection.
Proceed as follows:

- Connect the optical cable to the optical digital output of your TV.
- Then connect the optical cable to the optical digital input of your soundbar.
- Switch the TV set and sound bar on. Set the connected TV to “PCM Stereo” or “Stereo 2.0”.
- Start playing on the TV.
- Press the INPUT button on the remote control to select OPTICAL mode.
- You can use the volume buttons to adjust the volume to your requirements.
- If you wish, you can change the audio settings using the relevant buttons on the remote control.

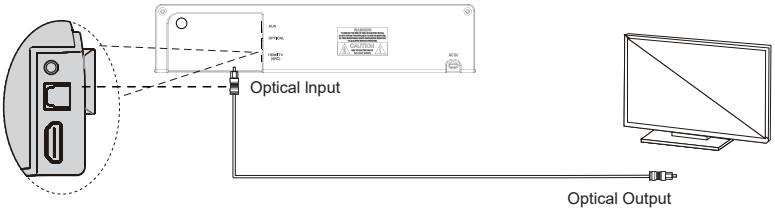

HDMI Mode

1. The Soundbar supports HDMI with Audio Return Channel(ARC). If your TV is HDMI ARC compliant, you can hear the TV audio through your Soundbar by using a single HDMI cable
2. Using a High Speed HDMI cable, connect the HDMI TV(ARC) connector on the soundbar to the HDMI ARC connector on the TV. The HDMI ARC connector on the TV might be labelled differently. For details, see the TV user manual.

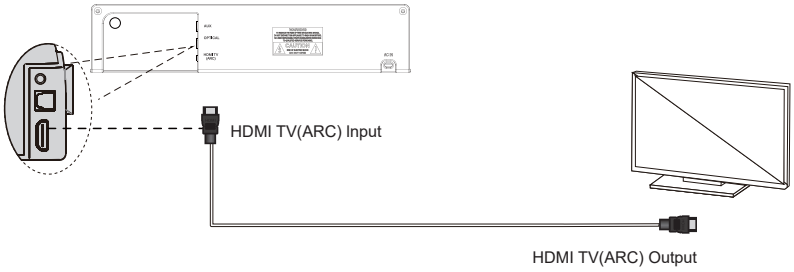

If you are using Smart TV apps

Apps such as Netflix's audio by default ,are set to Dolby and DTS for audio (sound) in some brand TV , this sound bar does not support Dollby and DTS audio ,for the sound bar operate correctly you must disable Dolby and DTS in Netflix ,or set auido to STEREO mode . please follow the instructions below :

Step 1 Launch the Netflix App
Step 2 Select a TV show or movie
Step 3 While your TV show or movie is playing , press the DOWN arrow on your remote
Step 4 Select Audio (sound) and Subtitles
Step 5 Select your preferred audio or subtitle options (Disable Dolby and DTS),or set to STEREO mode
Step 6 Save your settings
Step 7 Play the video to test for audio (sound) output

For more details about Netflix setting ,please click on the link below
Https://help.netflix.com/en/node/372

For Amazon Prime video and Hulu or other video apps, you must also disable Dolby and DTS in setting , the procedure should be similar to the instructions above ,if additional information is needed ,please consult the HELP section in apps or you can send mail to support@pheanoo.com ,we will support you ASAP

Specifications

Model	P27
Technology	BT/AUX/HDMI TV(ARC)/OPT/USB
Drivers	2.75inch*2 + 5.25inch
Audio Output Power	30W*2+60W=120W R.M.S.
Frequency Response	45Hz-20KHz
Signal-to-Noise Ratio	72dB
Impedance	4Ω*2+6Ω
Power Input	110V-240V~50Hz/60Hz
bluetooth Version	Version: 5.0 Range:up to 10m
Dimensions	Soundbar: 860W*76H*78D mm Subwoofer: 115W*420H*250D mm
Bluetooth Frequency	2402MHz - 2480MHz

TROUBLE SHOOTING

ISSUES	PROBLEMS	SOLUTIONS
Sound	No sound from SoundBar speakers	Connect the audio cable from your SoundBar to your TV or other devices. However, you do not need a separate audio connection when the SoundBar and TV are connected through HDMI ARC connection
		On the remote control, select the correct audio input.
	Distorted sound or echo	If you play audio from the TV through the SoundBar, make sure that the TV is muted.
Bluetooth	A device cannot connect with the SoundBar	Restart the soundbar and try pairing again
		You have not enabled the Bluetooth function of the device. See the user manual of the device on how to enable the function.
		The device is not correctly connected.
		The SoundBar is already connected with another Bluetooth device. Disconnect the connected device, then try again.
	Quality of audio play from a connected Bluetooth device is poor.	The Bluetooth reception is poor. Move the device closer to the SoundBar, or remove any obstacle between the device and the SoundBar.
	The connected Bluetooth device connects and disconnects constantly	The Bluetooth reception is poor. Move the device closer to the SoundBar, or remove any obstacle between the device and the SoundBar.

Caution:

This device complies with Part 15 of the FCC rules and Industry Canada license-exempt RSS standard(s). Operation is subject to the following two conditions: (1) this device may not cause harmful interference, and (2) this device must accept any interference received, including interference that may cause undesired operation.

The manufacturer is not responsible for any radio or TV interference caused by unauthorized modifications or change to this equipment. Such modifications or change could void the user's authority to operate the equipment.
This radio transmitter (identify the device by certification number or model number if Category II) has been approved by Industry Canada to operate with the antenna types listed below with the maximum permissible gain indicated. Antenna types not included in this list, having a gain greater than the maximum gain indicated for that type, are strictly prohibited for use with this device.

This equipment has been tested and found to comply with the limits for a Class B digital device, pursuant to part 15 of the FCC Rules. These limits are designed to provide reasonable protection against harmful interference in a residential installation. This equipment generates, uses and can radiate radio frequency energy and, if not installed and used in accordance with the instructions, may cause harmful interference to radio communications. However, there is no guarantee that interference will not occur in a particular installation. If this equipment does cause harmful interference to radio or television reception, which can be determined by turning the equipment off and on, the user is encouraged to try to correct the interference by one or more of the following measures:
-- Reorient or relocate the receiving antenna.
-- Increase the separation between the equipment and receiver.
-- Connect the equipment into an outlet on a circuit different from that to which the receiver is connected.
-- Consult the dealer or an experienced radio/TV technician for help.

The device has been evaluated to meet general RF exposure requirement.

To maintain compliance with FCC's RF exposure guidelines, this equipment should be installed and operated with a minimum distance of 20cm between the radiator and your body.