Install Guide

B**C82** Alarm Console

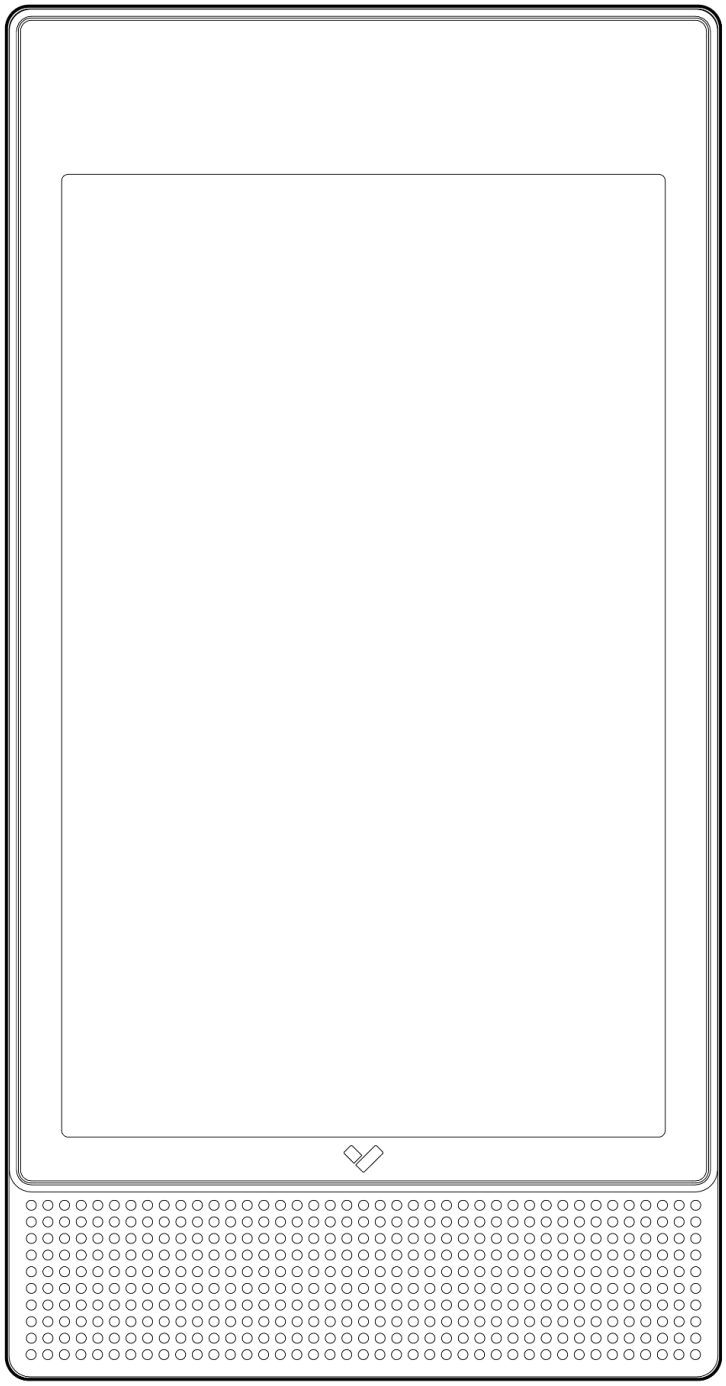

Verkada Inc. 405 E 4th Ave, San Mateo, CA 94401
sales@verkada.com

All specifications are subject to change without notice
Copyright © 2022 Verkada Inc. All rights reserved.

Document

Document Details

V1.0 (20230127)

(V1.0 first published 20230127)

Firmware

Firmware version can be verified on
Verkada Command command.verkada.com.

Product Model

This install guide pertains to model BC82-HW.

Verkada Inc. 405 E 4th Ave, San Mateo, CA 94401
sales@verkada.com

All specifications are subject to change without notice
Copyright © 2022 Verkada Inc. All rights reserved.

What's in the box

BC82 Alarm Panel

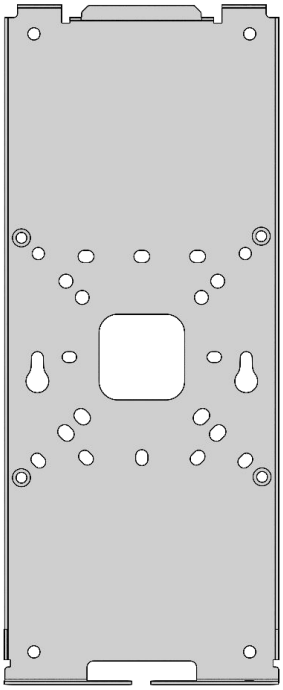

Mount Plate
(Attached to alarm panel)

T10 Security Torx Screwdriver

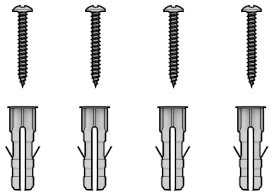

4 M4 x 25mm PH2 Wall Screws, and Wall Anchors

What you'll need

- A working internet connection
- A smartphone or laptop
- A #2 Phillips screwdriver or power drill with a #2 Phillips driver bit
- 1/4 inch (6.5mm) drill bit for wall anchors
- 1/8 inch (3mm) drill bit for pilot holes
- A shielded Cat5 or Cat6 Ethernet cable with a .2"-.25" outside diameter (5-6.5mm)

Connect

For easy registration and setup, scan the QR code on the back of the product.

If you prefer to manually register your product, please proceed to: verkada.com/start

Verkada Inc. 405 E 4th Ave, San Mateo, CA 94401
sales@verkada.com

All specifications are subject to change without notice
Copyright © 2022 Verkada Inc. All rights reserved.

Overview

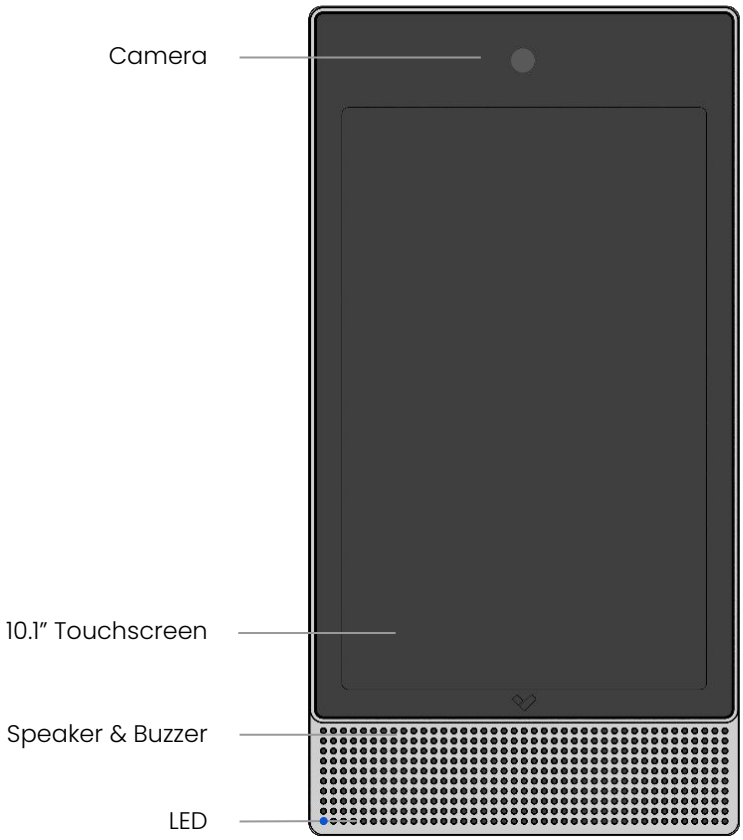

LED Behavior

Solid Orange
Hub is on and booting up.

Flashing Orange
Hub is updating firmware.

Flashing Blue
Hub can receive events but cannot reach the server.

Solid Blue
Hub is running, connected, and receiving events.

Verkada Inc. 405 E 4th Ave, San Mateo, CA 94401
sales@verkada.com

All specifications are subject to change without notice
Copyright © 2022 Verkada Inc. All rights reserved.

Mount Template

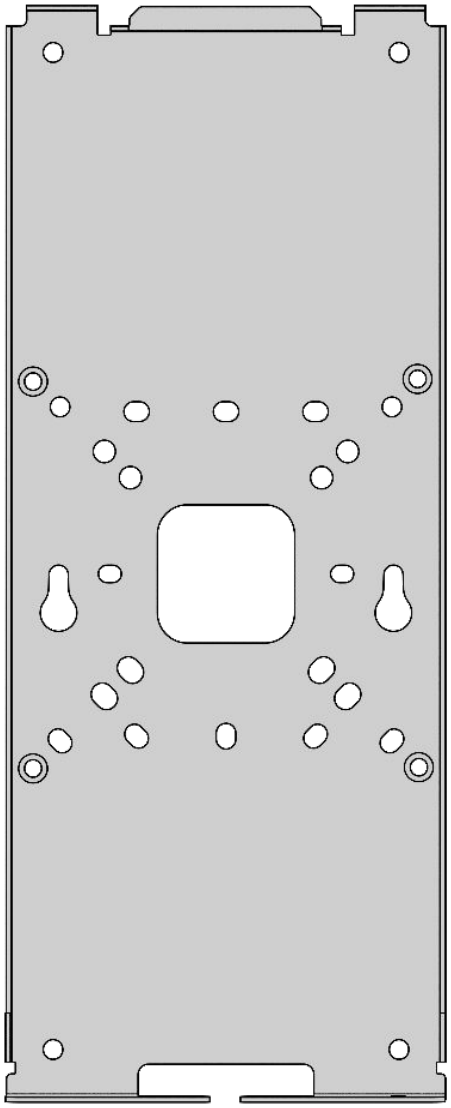

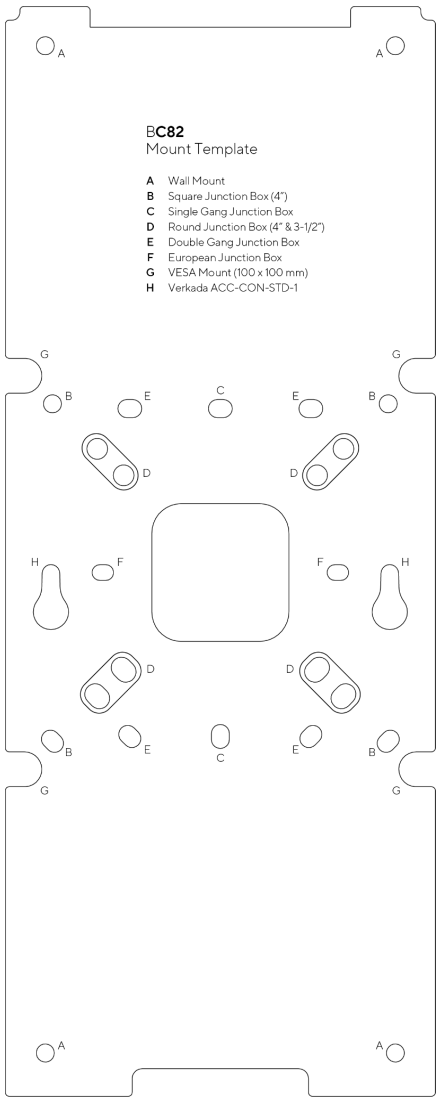

Mount plate details

Use the mount plate as a template and mark the correct hole pattern.

A Wall mount
B Square Junction Box (4")
C Single Gang Junction Box
D Round Junction Box (4" & 3-½")
E Double Gang Junction Box
F European Junction Box
G VESA Mount (100x100 mm)
H Verkada ACC-CON-STD-1

Verkada Inc. 405 E 4th Ave, San Mateo, CA 94401
sales@verkada.com

All specifications are subject to change without notice
Copyright © 2022 Verkada Inc. All rights reserved.

Overview

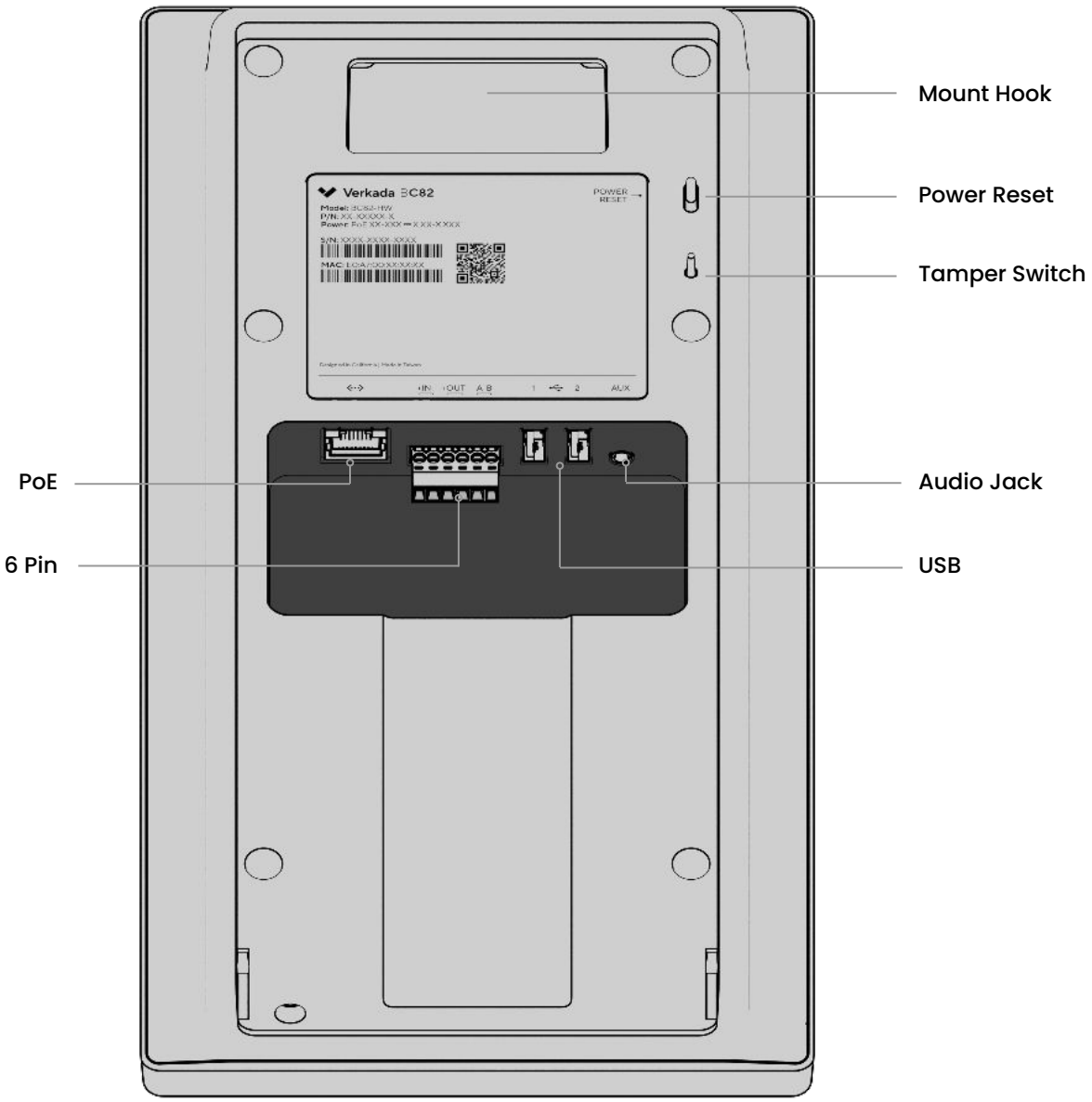

Wiring (RS-485)	
Green: B	
White: A	
Black: COM	

Verkada Inc. 405 E 4th Ave, San Mateo, CA 94401
sales@verkada.com

All specifications are subject to change without notice
Copyright © 2022 Verkada Inc. All rights reserved.

Remove mount plate

Use the provided T10 Torx security torx screwdriver to loosen the security screw.

Slide downward to unhook the mount plate.

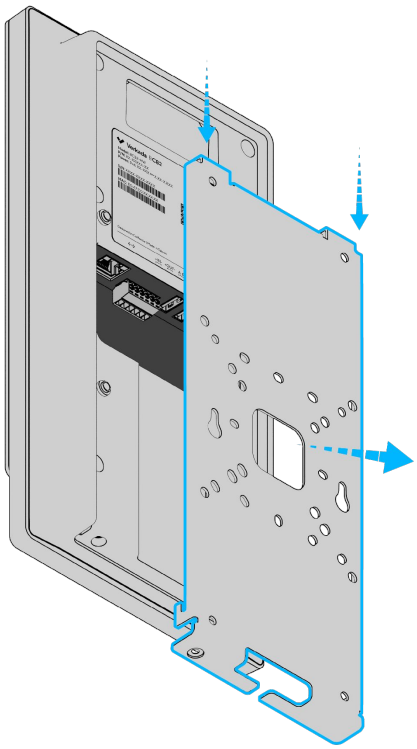

Verkada Inc. 405 E 4th Ave, San Mateo, CA 94401
sales@verkada.com

All specifications are subject to change without notice
Copyright © 2022 Verkada Inc. All rights reserved.

Mounting Template

Use the mounting template to help align mounting plate to the wall. Mark the four corners (A) on the wall.

Recommend to screw into the hole pattern A if possible (4 corners holes marked above) for the most secure mounting.

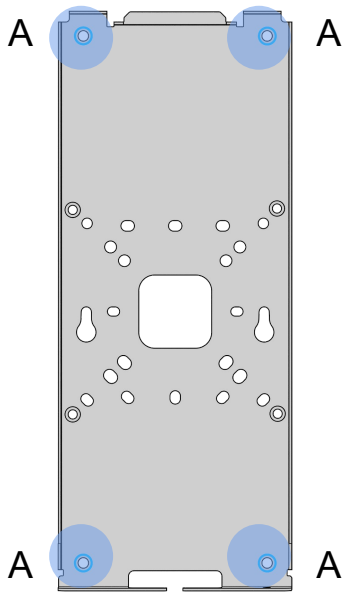

Use provided screws and wall anchors to mount plate onto the wall.

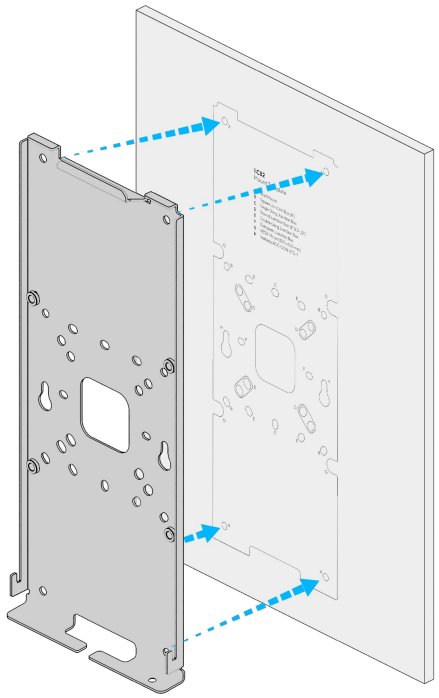

Verkada Inc. 405 E 4th Ave, San Mateo, CA 94401
sales@verkada.com

All specifications are subject to change without notice
Copyright © 2022 Verkada Inc. All rights reserved.

Mounting

Mounting Option 1

Cable exit through surface

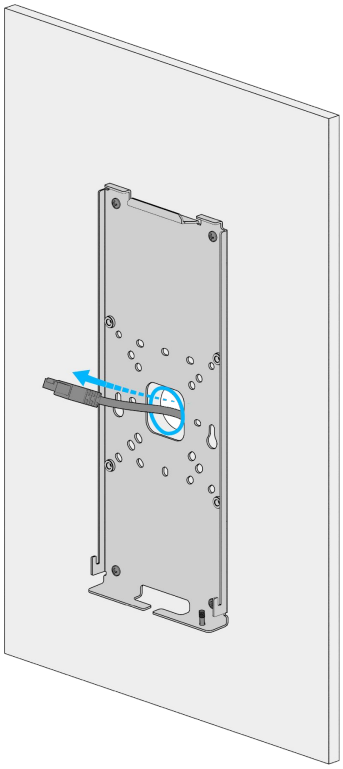

Mounting Option 2

Cable exit along surface

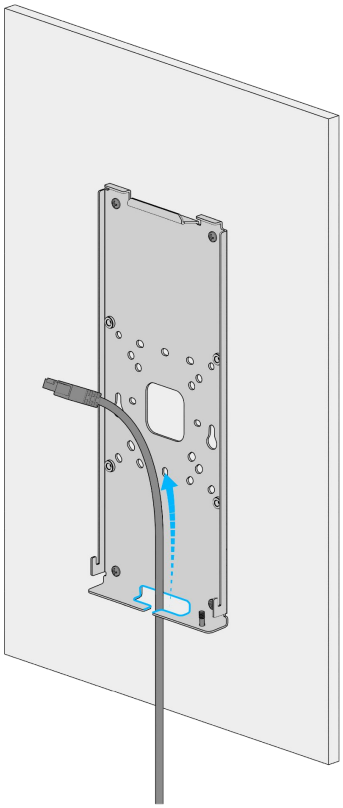

Verkada Inc. 405 E 4th Ave, San Mateo, CA 94401
sales@verkada.com

All specifications are subject to change without notice
Copyright © 2022 Verkada Inc. All rights reserved.

Connect

Scan QR Code info

For easy registration and setup, scan the QR code on the product.

If you prefer to manually register your product, please proceed to: verkada.com/start

Verkada Inc. 405 E 4th Ave, San Mateo, CA 94401
sales@verkada.com

All specifications are subject to change without notice
Copyright © 2022 Verkada Inc. All rights reserved.

Mounting option 1

Cable exit through mounting surface

1 - Connect the Ethernet cable to RJ45 connector.

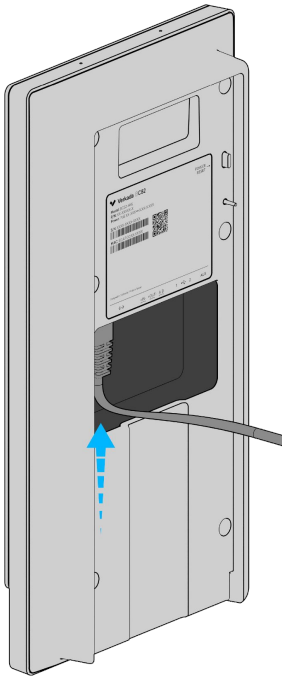

2 - With the cable connected to BC82 and exit through the mounting surface. Place BC82 back onto the mounting plate and engage with all 3 hooks to secure.

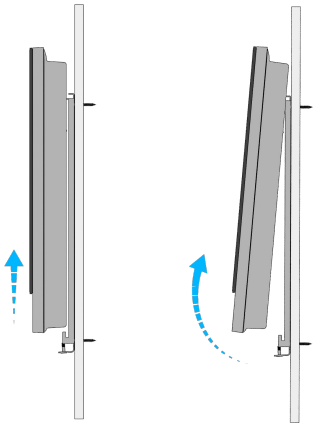

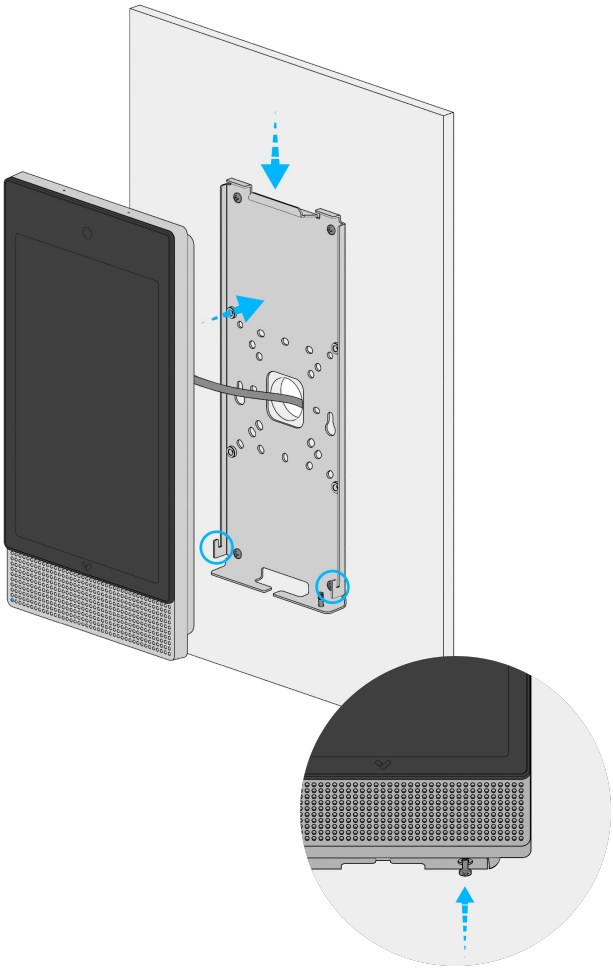

3 - To secure BC82, tighten the security screw using the provided T10 Torx security torx screwdriver.

Verkada Inc. 405 E 4th Ave, San Mateo, CA 94401
sales@verkada.com

All specifications are subject to change without notice
Copyright © 2022 Verkada Inc. All rights reserved.

Mounting option 2

Cable exit along the mounting surface

1 - Connect the Ethernet cable to RJ45 connector.

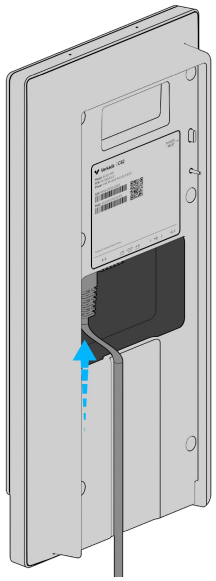

2 - With the cable connected to BC82 and exit downward along the mounting surface. Place BC82 back onto the mounting plate and engage with all 3 hooks to secure.

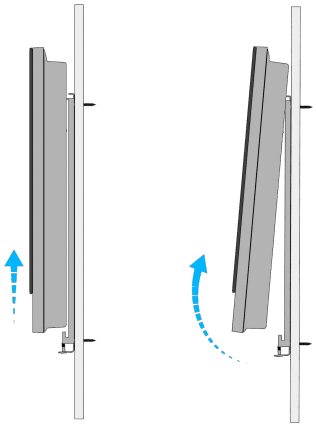

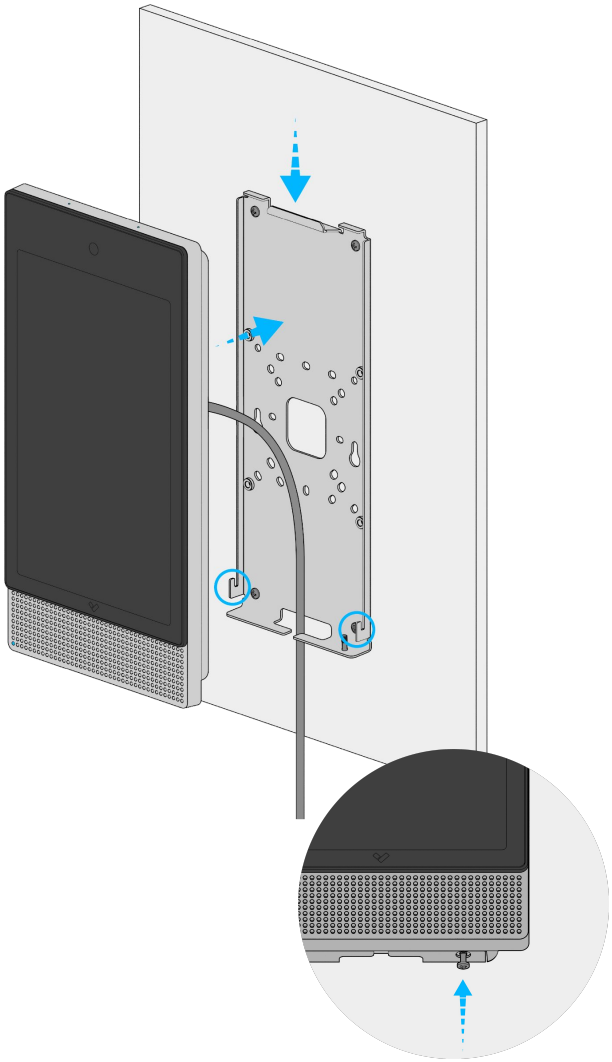

3 - To secure BC82, tighten the security screw using the provided T10 Torx security torx screwdriver.

Verkada Inc. 405 E 4th Ave, San Mateo, CA 94401
sales@verkada.com

All specifications are subject to change without notice
Copyright © 2022 Verkada Inc. All rights reserved.

Compliance

FCC Statement	**FEDERAL COMMUNICATIONS COMMISSION INTERFERENCE STATEMENT** This equipment has been tested and found to comply with the limits for a Class B digital device, pursuant to part 15 of the FCC Rules. These limits are designed to provide reasonable protection against harmful interference in a residential installation. This equipment generates, uses and can radiate radio frequency energy and, if not installed and used in accordance with the instructions, may cause harmful interference to radio communications. However, there is no guarantee that interference will not occur in a particular installation. If this equipment does cause harmful interference to radio or television reception, which can be determined by turning the equipment off and on, the user is encouraged to try to correct the interference by one or more of the following measures: -Reorient or relocate the receiving antenna. -Increase the separation between the equipment and receiver. -Connect the equipment into an outlet on a circuit different from that to which the receiver is connected. -Consult the dealer or an experienced radio/TV technician for help. This device complies with Part 15 of the FCC Rules. Operation is subject to the following two conditions: (1) this device may not cause harmful interference, and (2) this device must accept any interference received, including interference that may cause undesired operation. IMPORTANT NOTE: FCC Radiation Exposure Statement : This equipment complies with FCC radiation exposure limits set forth for an uncontrolled environment. This equipment should be installed and operated with minimum distance 20cm between the radiator & your body. Any changes or modifications not expressly approved by the party responsible for compliance could void your authority to operate the equipment.

Verkada Inc. 405 E 4th Ave, San Mateo, CA 94401
sales@verkada.com

All specifications are subject to change without notice
Copyright © 2022 Verkada Inc. All rights reserved.

Compliance

IC Statement	**Innovation, Science and Economic Development Canada(ISED) Compliance Statement** This device complies with ISED's licence-exempt RSS standard(s). Operation is subject to the following two conditions: (1) this device may not cause interference, and (2) this device must accept any interference, including interference that may cause undesired operation of the device. IMPORTANT NOTE: IC Radiation Exposure Statement: This equipment complies with IC RSS-102 radiation exposure limits set forth for an uncontrolled environment. This equipment should be installed and operated with minimum distance 20cm between the radiator & your body. Caution: The device for operation in the band 5150–5250 MHz is only for indoor use to reduce the potential for harmful interference to co-channel mobile satellite systems; This equipment supports DFS (Dynamic Frequency Selection) to minimize interference and/or damage caused by the high-power radars that are allocated as primary users (i.e. priority users) of the bands 5250-5350 MHz and 5470-5725 MHz. Le présent appareil est conforme aux CNR d' ISED applicables aux appareils radio exempts de licence. L'exploitation est autorisée aux deux conditions suivantes : (1) le dispositif ne doit pas produire de brouillage préjudiciable, et (2) ce dispositif doit accepter tout brouillage reçu, y compris un brouillage susceptible de provoquer un fonctionnement indésirable. NOTE IMPORTANTE: Déclaration d'exposition aux rayonnements d'IC : Cet équipement est conforme aux limites d'exposition aux rayonnements IC RSS-102 définies pour un environnement non contrôlé. Cet équipement doit être installé et utilisé avec une distance minimale de 20 cm entre le radiateur et votre corps. Avertissement: Le dispositif fonctionnant dans la bande 5150-5250 MHz est réservé uniquement pour une utilisation à l'intérieur afin de réduire les risques de brouillage préjudiciable aux systèmes de satellites mobiles utilisant les mêmes canaux; Cet équipement prend en charge DFS (Dynamic Frequency Selection) pour minimiser les interférences et/ou les dommages causés par les radars haute puissance qui sont attribués en tant qu'utilisateurs principaux (c'est-à-dire les utilisateurs prioritaires) des bandes 5250-5350 MHz et 5470-5725 MHz.

Verkada Inc. 405 E 4th Ave, San Mateo, CA 94401
sales@verkada.com

All specifications are subject to change without notice
Copyright © 2022 Verkada Inc. All rights reserved.

Appendix

Support

Thank you for purchasing this Verkada product. If for any reason things don't work right, or you need assistance, please contact us immediately.

verkada.com/support
Sincerely, The Verkada Team

Verkada Inc. 405 E 4th Ave, San Mateo, CA 94401
sales@verkada.com

All specifications are subject to change without notice
Copyright © 2022 Verkada Inc. All rights reserved.