Install Guide

B**K11** B**K21** Alarm Keypad

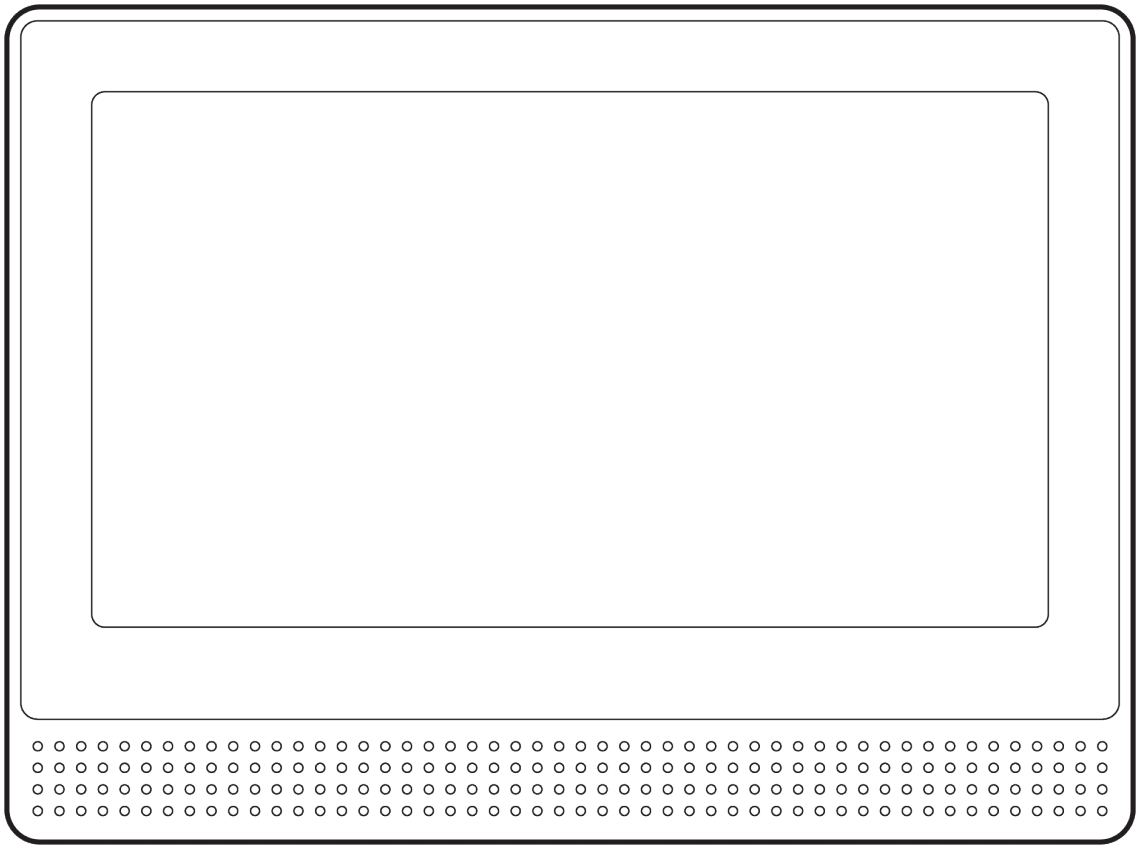

Verkada Inc. 406 E 3rd Ave, San Mateo, CA 94401
sales@verkada.com

All specifications are subject to change without notice
Copyright © 2023 Verkada Inc. All rights reserved.

Document

Document Details

V1.0 (20230724)

(V1.0 first published 20230724)

Firmware

Firmware version can be verified on
Verkada Command command.verkada.com.

Product Model

This install guide pertains to models BK11-HW and BK21-HW.

Verkada Inc. 406 E 3rd Ave, San Mateo, CA 94401
sales@verkada.com

All specifications are subject to change without notice
Copyright © 2023 Verkada Inc. All rights reserved.

What's in the box

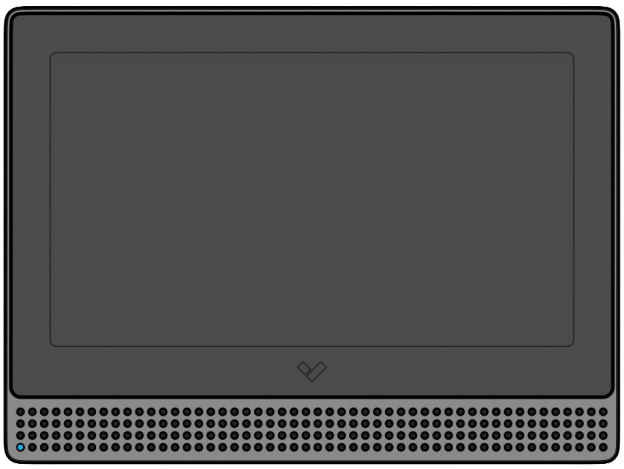

Alarm Keypad

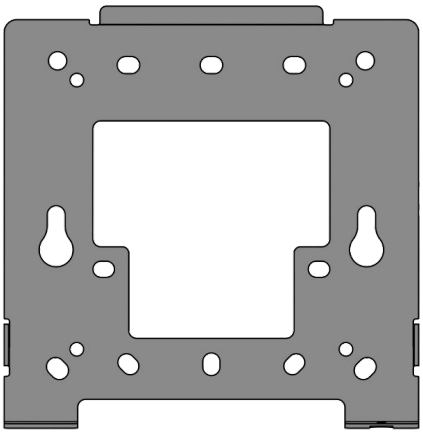

Mount Plate
(Attached to Alarm Keypad)

T10 Security Torx Screwdriver

4 M4 x 25mm PH2 Wall Screws

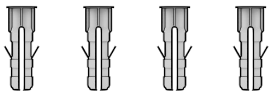

4 Wall Anchors

What you'll need

- A working internet connection
- A smartphone or laptop
- A #2 Phillips screwdriver or power drill with a #2 Phillips driver bit
- 3/16 inch (4.76 mm) drill bit for wall anchors
- A shielded Cat5 or Cat6 Ethernet cable

Connect

For easy registration and setup, scan the QR code on the back of the product.

If you prefer to manually register your product, please proceed to: verkada.com/start

Verkada Inc. 406 E 3rd Ave, San Mateo, CA 94401
sales@verkada.com

All specifications are subject to change without notice
Copyright © 2023 Verkada Inc. All rights reserved.

Overview

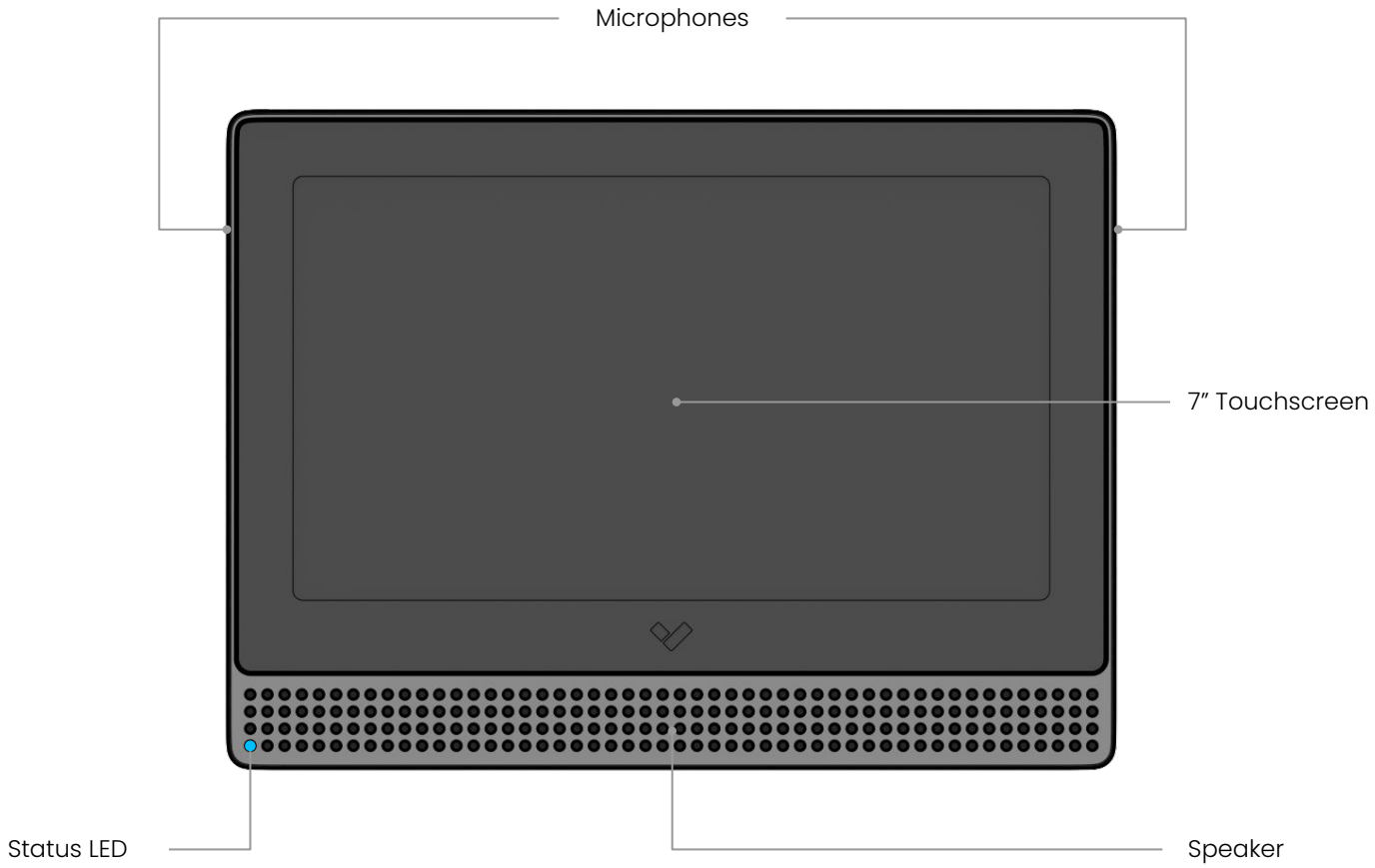

LED Behavior

Solid Orange
Keypad is on and booting up.

Flashing Orange
Keypad is updating firmware.

Flashing Blue
Keypad can receive events but cannot reach the server.

Solid Blue
Keypad is running, connected, and receiving events.

Verkada Inc. 406 E 3rd Ave, San Mateo, CA 94401
sales@verkada.com

All specifications are subject to change without notice
Copyright © 2023 Verkada Inc. All rights reserved.

Mount Template

Use the mount template to mark the appropriate hole pattern.

A Wall mount
Square Junction Box (4")
B Single Gang Junction Box
C Double Gang Junction Box
D European Junction Box
E VESA Mount (75x75 mm)
F Verkada ACC-CON-STD-1

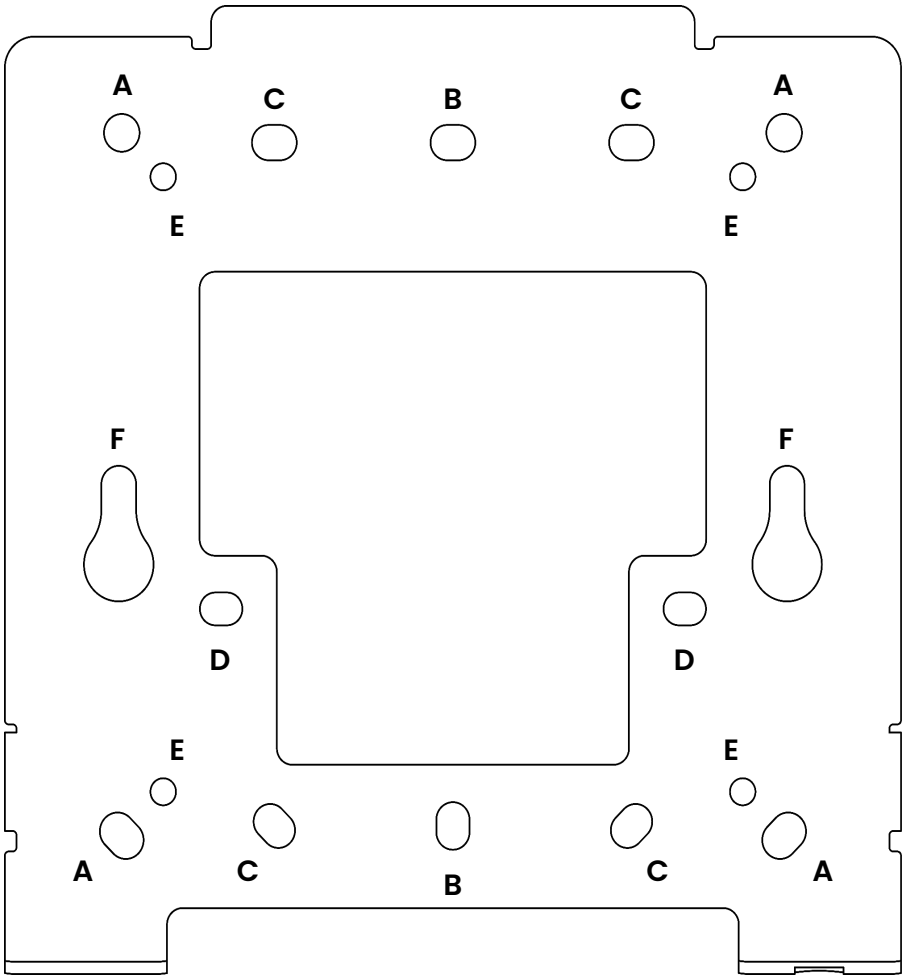

Verkada Inc. 406 E 3rd Ave, San Mateo, CA 94401
sales@verkada.com

All specifications are subject to change without notice
Copyright © 2023 Verkada Inc. All rights reserved.

Technical Specifications

Power Consumption	13W
Power Input Parameters	DC 10V-36V VDC input; 1.18A-0.33A PoE 42V-57V VDC input; 0.30A-0.22A
Connectivity	Ethernet 10/100Mbps Sub-GHz transceiver (863MHz - 928MHz)* 1x USB 2.0, 2x RS485
Display	7" LED-backlit multi-touch, 1024 RGB x 600 resolution
Audio	Mono speaker (73 dB at 1 meter) Dual microphones
Dimensions	Tablet: Height: 135.3mm / 5.3in; Width: 182.3mm / 7.2in; Depth: 28.4mm / 1.1in Mount: Height: 118.2mm / 4.7in; Width: 116.0mm / 4.6in; Depth: 12.5mm / 0.5in
Operating Temperature	0°C to 40°C / 32°F to 104°F, 0-90% humidity
Weight	Tablet: 480 grams / 1.1 lbs Mount: 113 grams / 0.2 lbs
Included Accessories	T10 screwdriver, x4 wall screws, x4 drywall anchors
Mounting Options	Wall Mount Bracket

*Sub-GHz capability is only enabled on BK21 devices.

Verkada Inc. 405 E 4th Ave, San Mateo, CA 94401
sales@verkada.com

All specifications are subject to change without notice
Copyright © 2022 Verkada Inc. All rights reserved.

Connect and register

Use the provided T10 Security Torx screwdriver to loosen the security screw.

Slide the mount plate downwards to remove it.

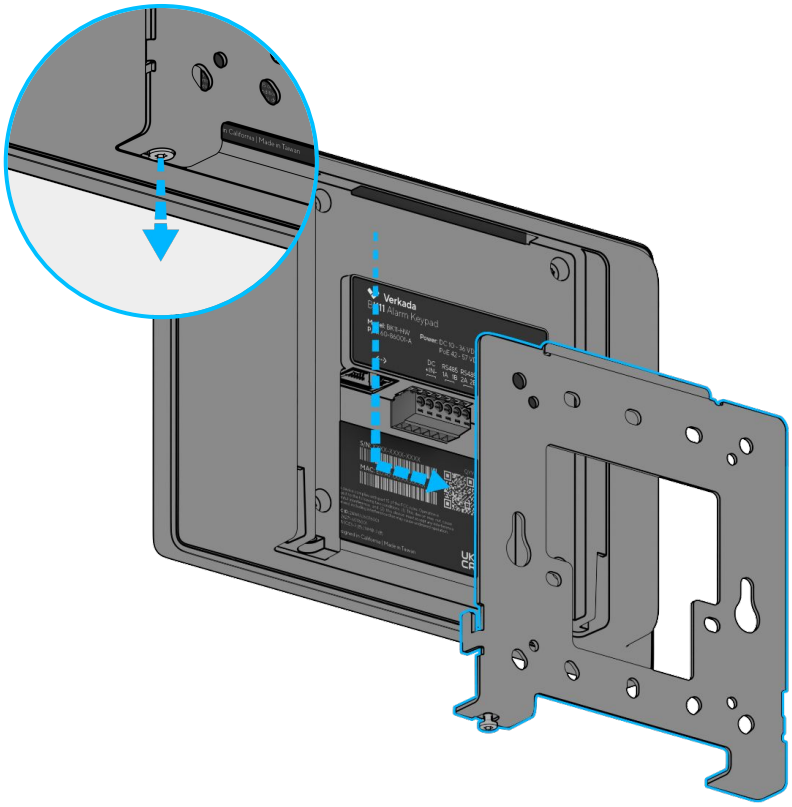

Connect the Ethernet cable to the PoE.af/.at port on the back of the Keypad.

Please note: Bootup sequence may take several seconds.

For easy registration and setup, scan the QR code on the product.

If you prefer to manually register your product, refer to the serial number on screen and proceed to: verkada.com/start

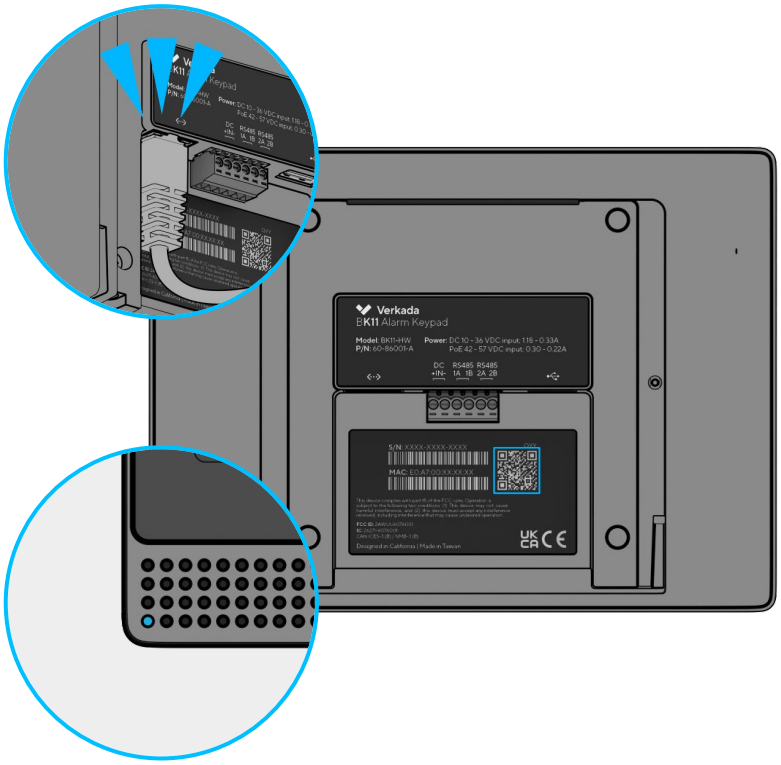

Verkada Inc. 406 E 3rd Ave, San Mateo, CA 94401
sales@verkada.com

All specifications are subject to change without notice
Copyright © 2023 Verkada Inc. All rights reserved.

Mounting 1/2

Please note: Avoid mounting the Keypad in direct sunlight for optimal device performance.

Reference the mount plate template on page 6 to mark the appropriate hole pattern on the mounting surface.

Use the wall anchors and screws to attach the mount plate onto the desired surface.

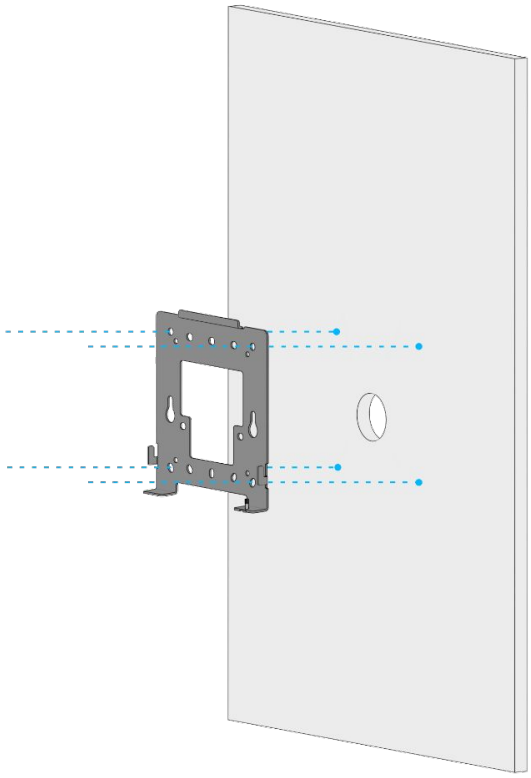

Cables can be routed through the surface, or along the surface.

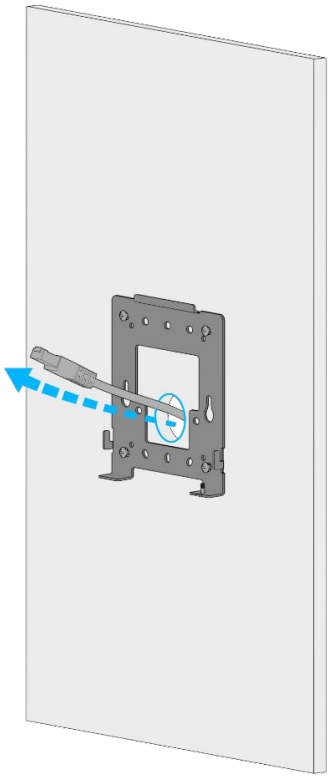

Option 1

Cable routing through the surface

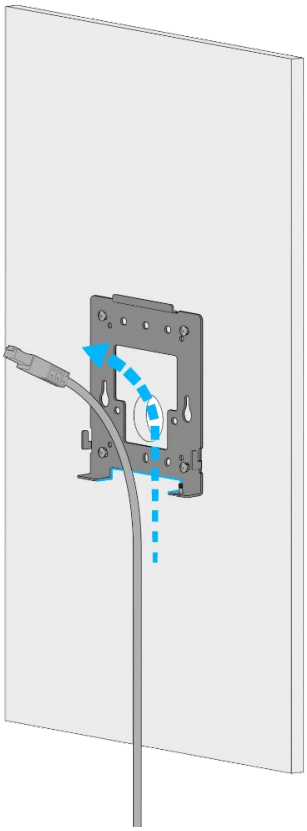

Option 2

Cable routing along the surface

Verkada Inc. 406 E 3rd Ave, San Mateo, CA 94401
sales@verkada.com

All specifications are subject to change without notice
Copyright © 2023 Verkada Inc. All rights reserved.

Mounting 2/2

Connect the Ethernet cable, and any other cables relevant to your installation, to the Alarm Keypad.

Please note: Bootup sequence may take several seconds.

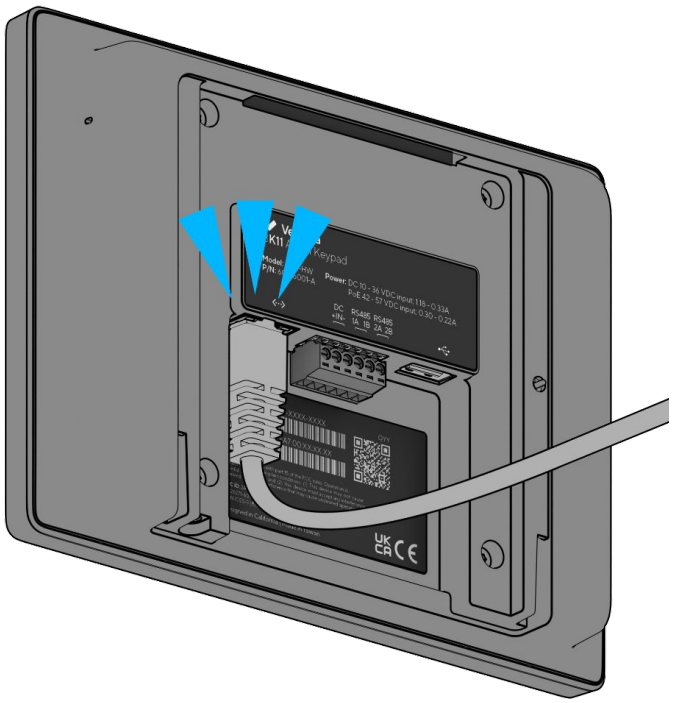

Engage the three hook features on the mount plate and slide the Keypad down.

To secure, tighten the security screw, using the provided T10 Security Torx screwdriver.

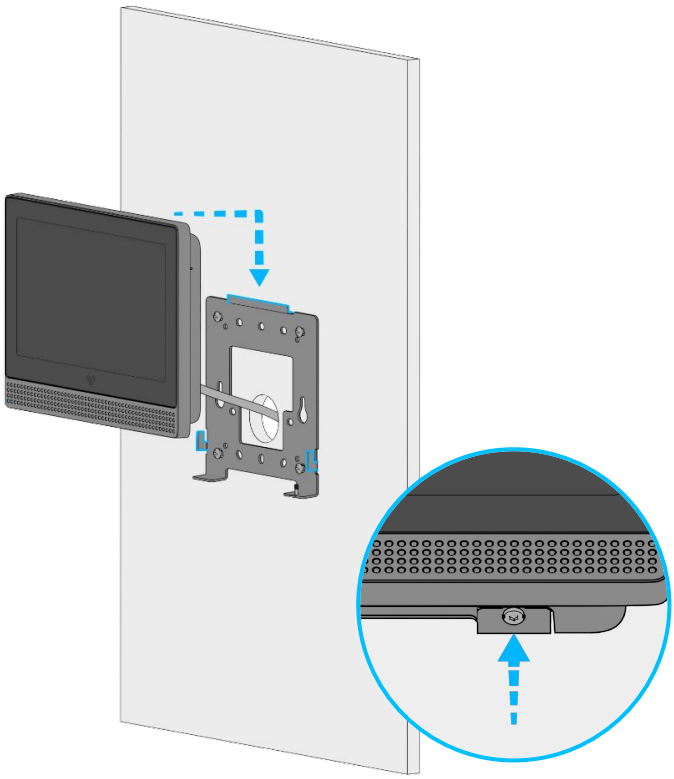

Verkada Inc. 406 E 3rd Ave, San Mateo, CA 94401
sales@verkada.com

All specifications are subject to change without notice
Copyright © 2023 Verkada Inc. All rights reserved.

Compliance

FCC Statement	This equipment has been tested and found to comply with the limits for a Class B digital device, pursuant to Part 15 of the FCC Rules. These limits are designed to provide reasonable protection against harmful interference when the equipment is operated in a residential environment. These limits are designed to provide reasonable protection against harmful interference in a residential installation. This equipment generates, uses and can radiate radio frequency energy and, if not installed and used in accordance with the instructions, may cause harmful interference to radio communications. However, there is no guarantee that interference will not occur in a particular installation. If this equipment does cause harmful interference to radio or television reception, which can be determined by turning the equipment off and on, the user is encouraged to try to correct the interference by one or more of the following measures: • Reorient or relocate the receiving antenna. • Increase the separation between the equipment and receiver. • Connect the equipment into an outlet on a circuit different from that to which the receiver is connected. • Consult the dealer or an experienced radio/TV technician for help. To assure continued compliance, any changes or modifications not expressly approved by the party responsible for compliance may void the user's authority to operate his equipment. (Example – use only shielded interface cables when connecting to computer or peripheral devices) This device complies with Part 15 of the FCC Rules. Operation is subject to the following two conditions: (1) This device may not cause harmful interference, and (2) This device must accept any interference received, including interference that may cause undesired operation. IMPORTANT NOTE: Radiation Exposure Statement: This equipment complies with FCC radiation exposure limits set forth for an uncontrolled environment. This equipment should be installed and operated with a minimum distance 20cm between the radiator & your body. This transmitter must not be co-located or operating in conjunction with any other antenna or transmitter.
IC Statement	This device complies with Industry Canada's licence-exempt RSSs. Operation is subject to the following two conditions: (1) This device may not cause interference; (2) This device must accept any interference, including interference that may cause undesired operation of the device. Le présent appareil est conforme aux CNR d'Industrie Canada applicables aux appareils radio exempts de licence. L'exploitation est autorisée aux deux conditions suivantes : (1) l'appareil ne doit pas produire de brouillage; (2) l'utilisateur de l'appareil doit accepter tout brouillage radioélectrique subi, même si le brouillage est susceptible d'en compromettre le fonctionnement. The device meets the exemption from the routine evaluation limits in section 2.5 of RSS 102 and compliance with RSS-102 RF exposure, users can obtain Canadian information on RF exposure and compliance. Le dispositif rencontre l'exemption des limites courantes d'évaluation dans la section 2.5 de RSS 102 et la conformité à l'exposition de RSS-102 rf, utilisateurs peut obtenir l'information canadienne sur l'exposition et la conformité de rf. This transmitter must not be co-located or operating in conjunction with any other antenna or transmitter. This equipment should be installed and operated with a minimum distance of 20 centimeters between the radiator and your body. Cet émetteur ne doit pas être Co-placé ou ne fonctionnant en même temps qu'aucune autre antenne ou émetteur. Cet équipement devrait être installé et actionné avec une distance minimum de 20 centimètres entre le radiateur et votre corps.

Verkada Inc. 406 E 3rd Ave, San Mateo, CA 94401
sales@verkada.com

All specifications are subject to change without notice
Copyright © 2023 Verkada Inc. All rights reserved.

Appendix

Support

Thank you for purchasing this Verkada product. If for any reason you're experiencing issues or need assistance, please contact our 24/7 Technical Support Team immediately.

Sincerely,
The Verkada Team
verkada.com/support

Verkada Inc. 406 E 3rd Ave, San Mateo, CA 94401
sales@verkada.com

All specifications are subject to change without notice
Copyright © 2023 Verkada Inc. All rights reserved.