Install Guide

FD52-HW Wireless Smoke and CO Detector

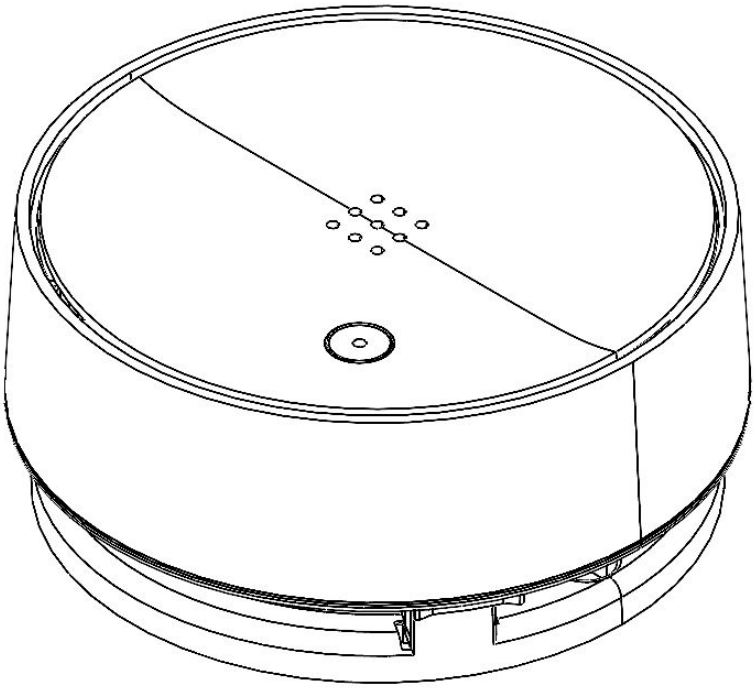

Document

Document Details

V1.0 (2024XXXX)

(V1.0 first published 2024XXXX)

Firmware

Firmware version can be verified on
Verkada Command command.verkada.com.

What's in the box

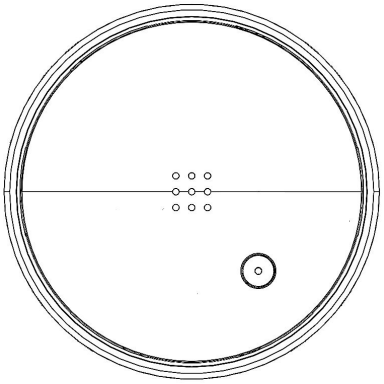

FD52 XXX

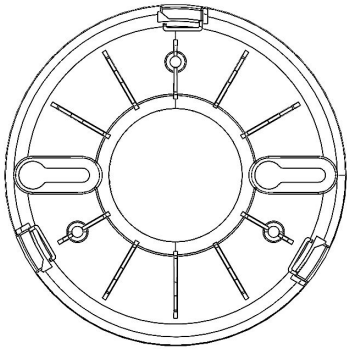

Mount plate
(Attached to hub)

2 M4 x
25mm PH2
wall screws

2 wall anchors

What you'll need

- A working internet connection
- A smartphone or laptop
- A Phillips screwdriver or power drill with a Phillips driver bit
- ¼ inch (6.5mm) drill bit for wall anchors
- ⅛ inch (3mm) drill bit for pilot holes
- 3/16 inch (4.5mm) drill bit for machine screws

Connect

For easy registration and setup, scan the QR code on the product.

If you prefer to manually register your product, please proceed to: verkada.com/start

Verkada Inc. 405 E 4th Ave, San Mateo, CA 94401
sales@verkada.com

All specifications are subject to change without notice
Copyright © Verkada Inc. All rights reserved.

Overview

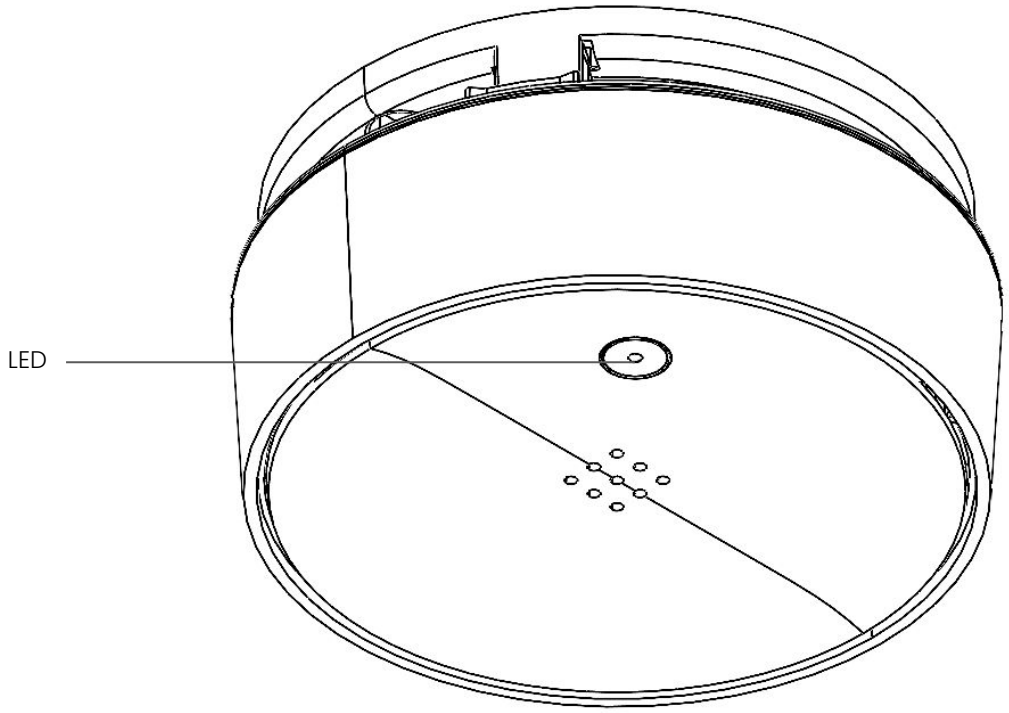

Placement

To ensure a reliable connection with your sensors, mount the FD52 Wireless Smoke and CO Sensor in a location that minimizes the number of walls and other obstructions between the hub and the wireless sensors.

LED and Audio Behavior

LED behavior	Audio behavior	Event
4 Red Blinks	4 tones	CO Alarm
3 Red Blinks	3 tones	Smoke Alarm
1 Yellow Blink	1 beep	Low Battery
2 Yellow Blinks	1 beep	CO Trouble
1 Yellow Blink	3 beeps	Smoke Trouble
2 Yellow Blinks	2 tones	Tamper Alarm
4 Yellow Blinks	1 tone	End-of-Life

Verkada Inc. 405 E 4th Ave, San Mateo, CA 94401
sales@verkada.com

All specifications are subject to change without notice
Copyright © Verkada Inc. All rights reserved.

Technical Specifications

Battery ~~Power Supply~~	2x non-rechargeable Energizer Ultimate Lithium L91 AA batteries for detector 1x non-rechargeable Panasonic CR123A battery for RF
Connectivity	VLink sub-GHz transceiver with internal Antenna (863MHz - 928MHz).
Tamper Detection	Yes
Compliance	*CO: UL2934 4th* *Smoke: UL217 8th*
Dimensions	118.3X118.3X52.2 mm
Weight	242.5 g
Operating Temperature	0°C-50°C / 32°F-122° 0 - 90% humidity
Included Accessories	mounting hardware kit
Mounting Option	Wall Mount Bracket

Verkada Inc. 405 E 4th Ave, San Mateo, CA 94401
sales@verkada.com

All specifications are subject to change without notice
Copyright © Verkada Inc. All rights reserved.

Locations

FD52 is a wireless device and need to work with a Verkada hub. The distance from the hub to FD52 must be within the range of the hub as shown in in FIgure 3. To ensure a reliable connection with your sensors, mount the FD52 in a location that minimizes the number of walls and other obstructions between the hub and the wireless sensors. Test before actual installation.

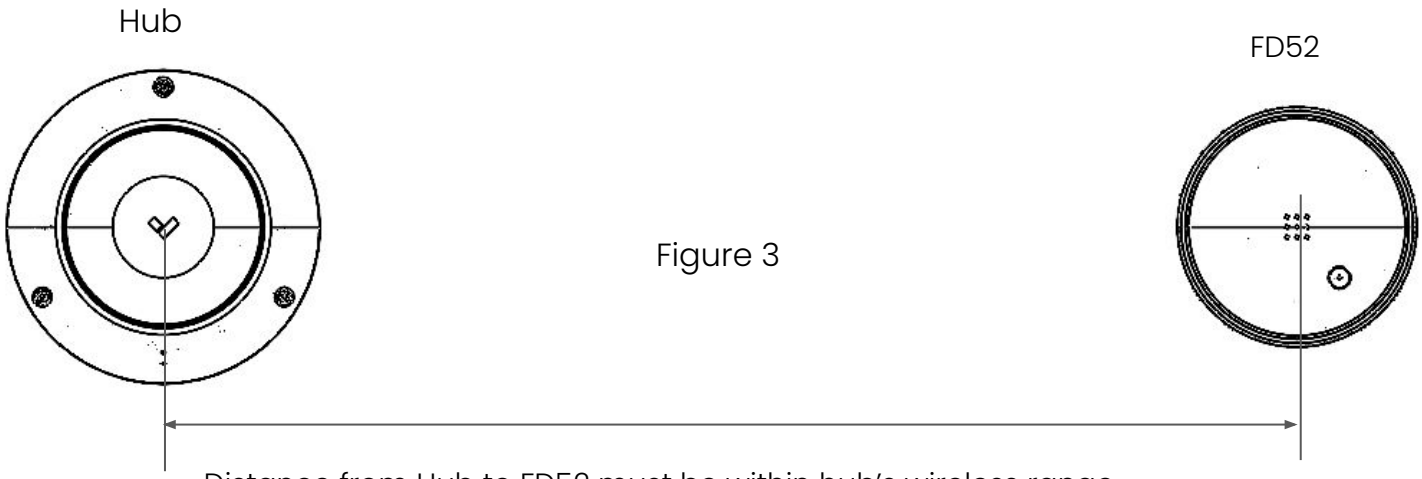

Figure 3

Locations not to install your detector

Nuisance alarms take place when smoke detectors are installed where they will not work properly. To avoid nuisance alarms, do not install smoke detectors in the following situations:

Combustion particles are the by-products of something that is burning. Thus, in or near areas where combustion particles are present you do not install the smoke detectors to avoid nuisance alarms, such as kitchens with few windows or poor ventilation, garages where there may be vehicle exhaust, near furnaces, hot water heaters, and space heaters.

Do not install smoke detectors less than 20 feet (6 meters) away from places where combustion particles are normally present. If a 20-foot distance is not possible, e.g. in a mobile home, try to install the detector as far away from the combustion particles as possible, preferably on the wall. To prevent nuisance alarm alarms, provide good ventilation in such places.

Verkada Inc. 405 E 4th Ave, San Mateo, CA 94401
sales@verkada.com
All specifications are subject to change without notice
Copyright © Verkada Inc. All rights reserved.

Activate and Install

Open the box and pick up the device.

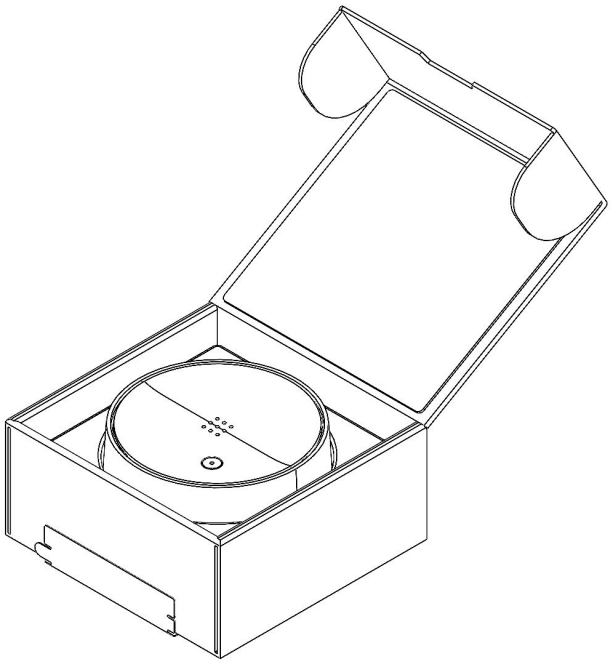

Open the battery door and remove the battery pull tab. Then close the battery door.

NOTE: Use only Panasonic or Duracell CR123A batteries. This Smoke/CO detector may not operate properly with other kinds of batteries.

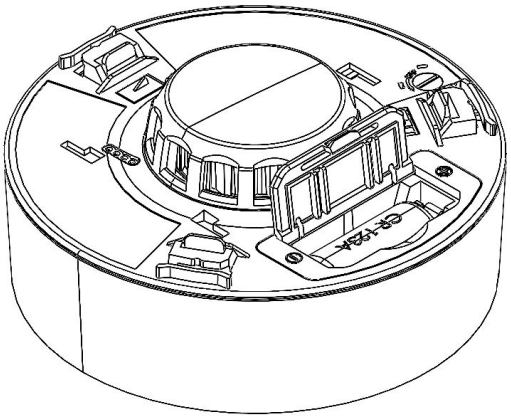

After battery is installed, please press test button immediately to check if the device could alarm properly.

The test alarm pattern is three (3) short alarm sirens with three (3) corresponding flashes of the red LED light and then four (4) short alarm sirens with four (4) corresponding flashes of the red LED light repeat two (2) cycles.

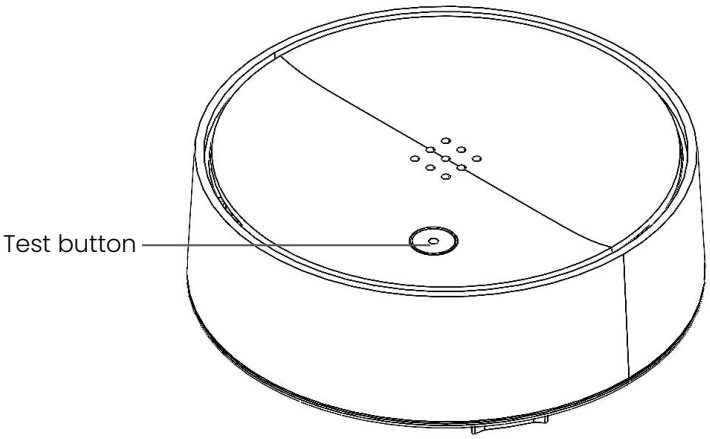

Verkada Inc. 405 E 4th Ave, San Mateo, CA 94401
sales@verkada.com

All specifications are subject to change without notice
Copyright © Verkada Inc. All rights reserved.

Activate and Install

At the place where you are going to install your Smoke/CO detector, draw a horizontal line six inches (15 cm) long.

Remove the mounting bracket from your unit by rotating it counterclockwise, shown in Figure 7.

Place the bracket so that the two longest hole-slots are aligned on the line. In each of keyhole slots, drawing a mark to locate a mounting plug and screw.

Remove the bracket.

Using a 3/16-inch (5mm) drill bit, drills two holes at the marks and insert plastic wall plugs. Put the smoke detector away from plastic dust on it when you drill holes for mounting.

Using the two screws and plastic wall plugs (all supplied), attach the bracket to the wall.

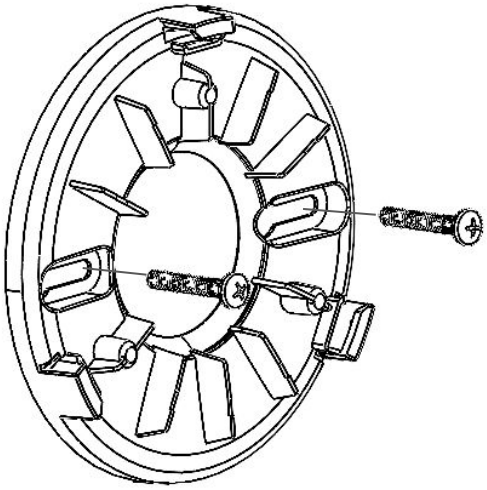

Line up the slot of the bracket and the Smoke/CO detector. Push the Smoke/CO detector onto the mounting bracket and turn it clockwise to fix it into place.

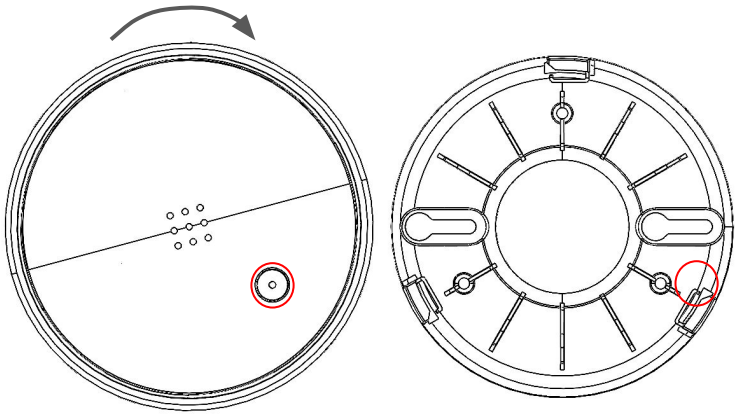

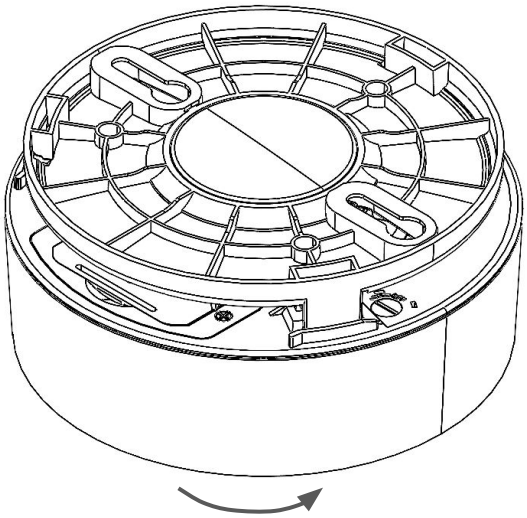

Verkada Inc. 405 E 4th Ave, San Mateo, CA 94401
sales@verkada.com

All specifications are subject to change without notice
Copyright © Verkada Inc. All rights reserved.

Connect

For easy registration and setup, scan the QR code on the product.

If you prefer to manually register your product, please proceed to: verkada.com/start

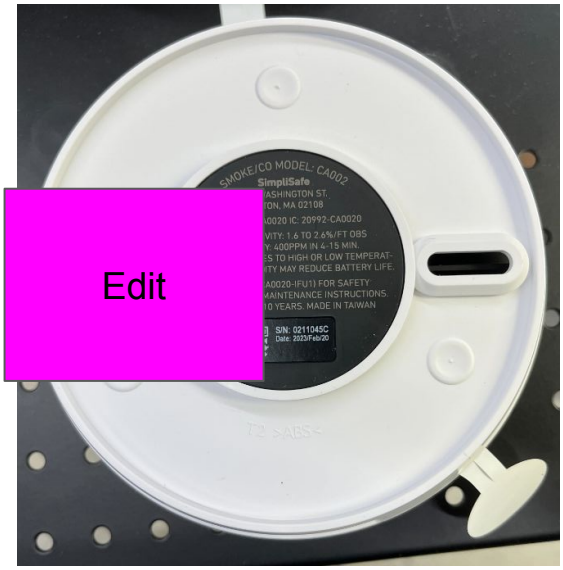

Verkada Inc. 405 E 4th Ave, San Mateo, CA 94401
sales@verkada.com

All specifications are subject to change without notice
Copyright © Verkada Inc. All rights reserved.

Operation modes

(A) Normal operation:

Test your Smoke/CO Detector weekly by pressing the test button (the button on the front of the sensor) to ensure the device is working properly. he test alarm pattern is three (3) short alarm sirens with three (3) corresponding flashes of the red LED light and then four (4) short alarm sirens with four (4) corresponding flashes of the red LED light repeat two (2) cycles.

If the Smoke/CO Detector do not sound, your unit will need to be replaced.

(B) Smoke Trouble Warning:

The Smoke trouble pattern is three (3) sirens beep with one (1) corresponding flashes of the yellow LED light every 50 seconds.

(C) CO Trouble Warning:

The CO trouble pattern is one (1) siren beep with two (2) corresponding flashes of the yellow LED light every 50 seconds.

(D) Silence Feature:

The silence feature can temporarily quiet the siren for several minutes, and the LED still flashes according to correspond alarm. You can silence the Smoke/CO alarm by pressing the Test/Silence button on the detector. The Smoke alarm will remain silent for up to 8 minutes. After 8 minutes, if the smoke has not cleared, the siren will be sounding again. The CO alarm will remain silent for up to 4 minutes. After 4 minutes, if the CO levels remain dangerous, the siren will be sounding again.

Verkada Inc. 405 E 4th Ave, San Mateo, CA 94401
sales@verkada.com

All specifications are subject to change without notice
Copyright © Verkada Inc. All rights reserved.

Operation modes

(E) Deactivation:

When disposing of the detector, the detector must be deactivated which discharges the battery to a safe level for disposal.

Please follow these steps to deactivate your detector:

(1). Please remove your detector from mounting bracket.

(2). Tear off "Deactivation Switch" sticker. The location of deactivation switch show in Figure 12.

(3). Turn the deactivation switch to “OFF” location with a screwdriver in the direction indicated by the arrow on back of the detector. This will disable the detector.

Verkada Inc. 405 E 4th Ave, San Mateo, CA 94401
sales@verkada.com

All specifications are subject to change without notice
Copyright © Verkada Inc. All rights reserved.

Appendix

Limitation of Smoke Sensor

The various situations against which the smoke alarm may not be effective, for example:

(1). Fires where the victim is intimate with a flaming initiated fire; for example, when a person's clothes catch fire while cooking;

(2). Fires where the smoke is prevented from reaching the smoke alarm due to a closed door or other obstruction;

(3). Incendiary fires where the fire grows so rapidly that an occupant's egress is blocked even with properly located smoke alarms.

Verkada Inc. 405 E 4th Ave, San Mateo, CA 94401
sales@verkada.com

All specifications are subject to change without notice
Copyright © Verkada Inc. All rights reserved.

In case of CO

a. Description of CO

Carbon monoxide, also known as "CO" by the chemical form, is considered to be a highly dangerous poisonous gas, because it is colorless, odorless or tasteless and very toxic. In general, biochemistry phenomena have shown that the presence of CO gas inhibits the blood's capacity to transport oxygen throughout the body, which can eventually lead to brain damage.

Carbon monoxide is produced by the incomplete combustion of fuels such as natural gas, propane, heating oil, kerosene, coal, charcoal, gasoline, or wood. The incomplete combustion of fuel can occur in any device which depends on burning for energy or heat.

Potential sources of carbon monoxide in your home or office include clogged chimney, wood stove, wood or gas fireplace, automobile and garage, gas water heater, gas appliance, gas or kerosene heater, gas or oil furnace, and cigarette smoke.

b. Symptoms of CO Poisoning

The following symptoms are related to CO poisoning and should be discussed with all members of the household so that you know what to look for:

- Mild exposure: slight headache, nausea, fatigue (similar to "flu-like" symptoms)
- Medium exposure: severe throbbing headache, drowsiness, confusion, vomiting, fast heart rate
- Extreme exposure: unconsciousness, convulsions, cardio- respiratory failure, death

Many victims of carbon monoxide poisoning indicate that while they were aware that they were ill, they became so disoriented and confused that they were unable to help themselves by either exiting the building or calling for a assistance. Young children and household pets may be the first affected. Exposure during sleep is particularly dangerous, because the victim usually does not awaken.

Verkada Inc. 405 E 4th Ave, San Mateo, CA 94401
sales@verkada.com

All specifications are subject to change without notice
Copyright © Verkada Inc. All rights reserved.

In case of CO

c. What to do in the event of a CO Alarm

(1) Press the mute button
(2) Call emergency services
(3) Immediately move to fresh air
(4) After following steps 1–3, if your alarm reactivates within a 24 hour period, repeat steps 1–3 and call a qualified appliance technician to investigate。

Verkada Inc. 405 E 4th Ave, San Mateo, CA 94401
sales@verkada.com

All specifications are subject to change without notice
Copyright © Verkada Inc. All rights reserved.

General Maintenance

To keep your Smoke/CO detector in good working order, please follow the following steps:

- Remove the batteries before cleaning
- Once a week: verify alarm siren, LED lights, and battery operation by pushing the test buttons.
- Once a month: remove the device from the mounting bracket and vacuum the detector cover and vents with a soft brush attachment to remove dust and dirt. Never use water cleaners since they may damage the unit.
- Replace batteries as needed
- Reinstall after cleaning and then test using the tests button.

Never attempt to disassemble the unit or clean inside of it as this will void your warranty. Never use detergents or solvents to clean the unit. When household cleaning supplies or similar contaminants are used, the area must be well ventilated. The following substances can damage the sensors and may cause false reading: methane, propane, isobutene, isopropanol, ethyl acetate, hydrogen sulfide, sulfur dioxides, alcohol base products, paints, thinner, solvents, adhesives, hair spray, after shave, pertume, and some cleaning agents. Do not paint the detector. Paint will seal the vents and interfere with its ability to detect smoke and CO. Move the detector prior to performing any of the following: staining or stripping wood floors or furniture, painting, wallpapering, using adhesives. Store the detector in a plastic bag during any of the above projects to help protect the sensors from damage. Make sure to reinstall the detector once done so as to assure continuous protection.

Verkada Inc. 405 E 4th Ave, San Mateo, CA 94401
sales@verkada.com

All specifications are subject to change without notice
Copyright © Verkada Inc. All rights reserved.

FD52 Compliance

FCC Statement	This equipment has been tested and found to comply with the limits for a Class B digital device, pursuant to Part 15 of the FCC Rules. These limits are designed to provide reasonable protection against harmful interference when the equipment is operated in a residential environment. These limits are designed to provide reasonable protection against harmful interference in a residential installation. This equipment generates, uses and can radiate radio frequency energy and, if not installed and used in accordance with the instructions, may cause harmful interference to radio communications. However, there is no guarantee that interference will not occur in a particular installation. If this equipment does cause harmful interference to radio or television reception, which can be determined by turning the equipment off and on, the user is encouraged to try to correct the interference by one or more of the following measures: • Reorient or relocate the receiving antenna. • Increase the separation between the equipment and receiver. • Connect the equipment into an outlet on a circuit different from that to which the receiver is connected. • Consult the dealer or an experienced radio/TV technician for help. To assure continued compliance, any changes or modifications not expressly approved by the party responsible for compliance may void the user's authority to operate his equipment. (Example – use only shielded interface cables when connecting to computer or peripheral devices) This device complies with Part 15 of the FCC Rules. Operation is subject to the following two conditions: (1) This device may not cause harmful interference, and (2) This device must accept any interference received, including interference that may cause undesired operation. IMPORTANT NOTE: Radiation Exposure Statement: This equipment complies with FCC radiation exposure limits set forth for an uncontrolled environment. This equipment should be installed and operated with a minimum distance 20cm between the radiator & your body. This transmitter must not be co-located or operating in conjunction with any other antenna or transmitter.
IC Statement	This device complies with Industry Canada's licence-exempt RSSs. Operation is subject to the following two conditions: (1) This device may not cause interference; (2) This device must accept any interference, including interference that may cause undesired operation of the device. Le présent appareil est conforme aux CNR d'Industrie Canada applicables aux appareils radio exempts de licence. L'exploitation est autorisée aux deux conditions suivantes : (1) l'appareil ne doit pas produire de brouillage; (2) l'utilisateur de l'appareil doit accepter tout brouillage radioélectrique subi, même si le brouillage est susceptible d'en compromettre le fonctionnement. The device meets the exemption from the routine evaluation limits in section 2.5 of RSS 102 and compliance with RSS-102 RF exposure, users can obtain Canadian information on RF exposure and compliance. Le dispositif rencontre l'exemption des limites courantes d'évaluation dans la section 2.5 de RSS 102 et la conformité à l'exposition de RSS-102 rf, utilisateurs peut obtenir l'information canadienne sur l'exposition et la conformité de rf. This transmitter must not be co-located or operating in conjunction with any other antenna or transmitter. This equipment should be installed and operated with a minimum distance of 20 centimeters between the radiator and your body. Cet émetteur ne doit pas être Co-placé ou ne fonctionnant en même temps qu'aucune autre antenne ou émetteur. Cet équipement devrait être installé et actionné avec une distance minimum de 20 centimètres entre le radiateur et votre corps.

Verkada Inc. 405 E 4th Ave, San Mateo, CA 94401
sales@verkada.com

All specifications are subject to change without notice
Copyright © Verkada Inc. All rights reserved.

BR31 Wireless Door Sensor
Tech Specs

BR32 Wireless Motion Sensor
Tech Specs

BR33 Wireless Panic Button
Tech Specs

BR33

Power and network

Power Supply	1 x CR123A lithium battery	**Wireless Communication**	Proprietary 915 MHz (U 868 MHz (UK, Europe)
Battery Life	Up to 5 years	**Connectivity**	Connects to the BC82 BK21 Alarm Keypad, or

Sensor features

Wireless Range	305m / 1,000ft (line-of-sight) 61m / 200ft (typical environment)	**Button Press Options**	Single, double, triple, p

General

Dimensions	Height: 81mm / 3.2in Width: 36mm / 1.42in Depth: 124mm / 0.94in	**Operating Temperature**	0°C to 45°C / 32°F to 11 0-90% humidity
Weight	49g / 1.73oz	**LED Indicator**	Successful transmission transmission, low batte
Certifications	FCC, IC, CE, UKCA, RCM, IFETEL, NDAA, EN 50131 (Grade 2)	**Warranty**	10 years

Installation

Included Accessories	QSG, wall screws, wall anchors, torx wrench, VHB adhesive mount	**Mounting Options**	Wall or surface mount; for lanyard attachment

Locations

Since CO gas moves freely in the air, the suggested location is in or as near as possible to sleeping areas of the home. The human body is most vulnerable to the effects of CO gas during sleeping hours. For maximum protection, a CO detector should be located outside primary sleeping areas or on each level of your home. The electrochemical sensor detects carbon monoxide, measures the concentration and sounds a loud alarm before a potentially harmful level is reached.

Smoke detectors should be installed in accordance with the NFPA Standard 72 (National Fire Protection Association, Batterymarch Park, Quincy, MA 02169). For complete coverage in residential units, smoke detectors should be installed in all rooms, halls, storage areas, basements, and attics in each family living unit. Minimum coverage is one detector on each floor and one in each sleeping area.

The Smoke/CO Detector must be replaced within 10 years of the date of manufacture. This date can be found on the label on the back of the device.

Install smoke detectors as close to the center of the ceiling as possible. If this is not practical, put the detector on the ceiling, no closer than 20 inches (50 cm) from any wall or corner, as shown in Figure 1

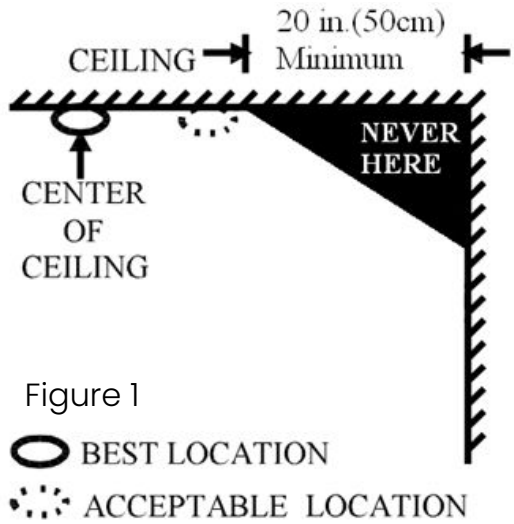

Figure 1

If some of your rooms have sloped, peaked, or gabled ceilings, try to mount detectors 0.91 meter measured horizontally from the highest point of the ceiling as shown Figure 2

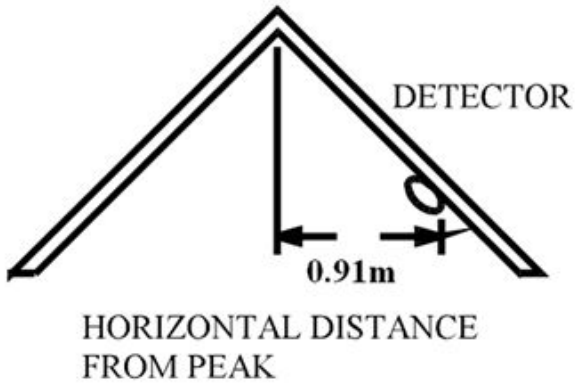

Figure 2

Verkada Inc. 405 E 4th Ave, San Mateo, CA 94401
sales@verkada.com

All specifications are subject to change without notice
Copyright © Verkada Inc. All rights reserved.