Test report

according to ISO/IEC 17025:2017

FCC
(Federal Communications Commission)
Test Firm Registration Number: 768032
Designation Number DE0022

Electromagnetic compatibility

e-CFR Title 47 Chapter I Subchapter A Part 15 Subpart B
Unintentional Radiators

DAkkS
Deutsche Akkreditierungsstelle
D-PL-17379-01-01
D-PL-17379-01-02
D-PL-17379-01-03

TESTED IN GERMANY	**STC Germany GmbH** Ohmstrasse 1 84160 Frontenhausen, Germany Tel.: + 49 (0) 8732 6381 Fax: + 49 (0) 8732 2345 E-mail: grstc@stc.group	Prüfbericht Nr./ Test report no.: **20/07-0012** Seite 1 von 33 Seiten Page 1 of 33 pages

Table of contents

Test report 1
1. Client information: 3
2. Equipment under test (EUT): 3
3. Performed measurements and results 4
4. Description of the Equipment under test and test conditions 5
5. AC power line conducted emission measurements 6
6. Radiated emission measurements 12
7. Test equipment 19
8. Test Setup 20
9. Measurement uncertainty 23
10. Photos setup 24
11. CONCLUSIONS 25
12. Photos of tested sample(s) 26

Location of test facility:

STC Germany GmbH
Ohmstrasse 1
84160 Frontenhausen
Germany

1. Client information:

Name:	EKF-diagnostic GmbH
Address:	Ebendorfer Chaussee 3, 39179 Barleben, Germany
Name of contact:	Kerstin Riemer
Telephone:	+4939203511144
Fax:	+4939203511171
E-mail:	kerstin.riemer@ekf.diagnostic.de

2. Equipment under test (EUT):

2.1 Identification of the EUT

Equipment:	Meter
Model:	DiaSpect Tm
Brand name:	-/-
Serial no.:	20TB0751, 20TB0750, 15TM4240, 15TM1451, 15TM1453
Manufacturer:	EKF-diagnostic GmbH
Country of origin:	Germany
Highest frequency generated or used in the device or on which the device operates or tunes (MHz):	2.48 GHz
Sample received:	02.07.2020
Tests were performed:	02.07.2020 –26.01.2021

2.2 Additional information about the EUT:

-/-

To duplicate parts of this test report needs the written confirmation of the test laboratory.

The test results relate only to the above mentioned test sample(s).

3. Performed measurements and results

List of measurements
The complete list of measurements required in e-CFR Title 47 Chapter I Subchapter A Part 15 Subpart B, Unintentional Radiators is given below

Standard:	Test Method:		test requirements applicable fulfilled: yes	no	yes	no
§15.107	ANSI C63.4 Section 7	AC Mains Conducted Emissions	☒	☐	☒	☐
§15.109	ANSI C63.4 Section 8	Radiated Emissions	☒	☐	☒	☐
§15.111	-/-	Antenna power conduction limits for receivers	☐	☒	☐	☐
§15.113	-/-	Power line carrier systems	☐	☒	☐	☐
§15.115	-/-	TV interface devices, including cable system terminal devices	☐	☒	☐	☐
§15.117	-/-	TV broadcast receivers	☐	☒	☐	☐
§15.118	-/-	Cable ready consumer electronics equipment	☐	☒	☐	☐
§15.120	-/-	Program blocking technology requirements for television receivers	☐	☒	☐	☐
§15.121	-/-	Scanning receivers and frequency converters used with scanning receivers	☐	☒	☐	☐
§15.123	-/-	Labeling of digital cable ready products	☐	☒	☐	☐

All required / applicable tests according to the following standards were performed under STC-Ref-No. 20/07-0012

-e-CFR Title 47 Chapter I Subchapter A Part 15 Subpart B, § 15.107 Conducted limits
-e-CFR Title 47 Chapter I Subchapter A Part 15 Subpart B, § 15.109 Radiated emission limits

- e-CFR data is current as of Feb 04, 2021

4. Description of the Equipment under test and test conditions

Power:	AC-Adaptor SM15-5-V-138 Input: 100-240 V AC, 50/6 Hz, 0.2 A Output: 5 V DC, 1.0 A
Cables:	USB 95 cm
Approx. Size (l x w x h):	(150 x 90 x 38) mm
Test conditions:	The “Meter” – Model DiaSpect Tm (= equipment under test – EUT) had been tested with a host Laptop and a provided AC-Adaptor where required, in the following modes: (1) Meter active, USB connected to Laptop, Data transfer via USB (and BLE active). (2) Charge mode. During the tests the EUT was powered with 120 V~/60Hz. The tested configuration represents (based on the product specification) with the tested operation modes the worst case.

5. AC power line conducted emission measurements

Applied standards
-e-CFR Title 47 Chapter I Subchapter A Part 15 Subpart B, § 15.107 Conducted limits

Test site
Measurements of conducted emission from EUT was made in the shielded chamber (DC - 10GHz) located in the test facility.

Test equipment and test set up:
Test equipment used for conducted emission measurements as given in clause Test equipment of this report.
Test setup used for conducted emission measurements as given in clause Test setups of this report.

Detector function selection and bandwidth
In conducted emissions measurement CISPR quasi-peak- and average-detector were used.
The bandwidth of the detector of instrument is 10 kHz over the frequency range of 150 kHz to 30 MHz.

Frequency range to be scanned
For conducted emission measurements, the spectrum in the range of 150 kHz to 30 MHz was investigated.

Test conditions and configuration of EUT
The EUT was configured and operated with conditions as mentioned under “Test conditions” in clause 4 of this report.

All modes are investigated by operating the EUT in a range of typical modes of operation, with typical cable positions, and with a typical system equipment configuration and arrangement. For each mode of operation and for each ac power current-carrying conductor, cable manipulation are performed within the range of likely configurations. The highest values measured are shown in the table below. The corresponding configuration is shown in the “Photo(s) of test setup”.
The EUT was placed on a 80 cm high non metallic table. Measurements were performed on the AC terminals of the EUT, on neutral (N)- and live (L1)-wire.

Limit:

Limit for Conducted Emissions

Frequency Range [MHz]	Quasi-Peak Limits [dBµV]	Average [dBµV]
0.15 - 0.5	66 to 56 Note 1	56 to 46 Note 1
0.5 - 5.0	56	46
5.0 - 30.0	60	50
Note 1: The level decreases linearly with the logarithm of the frequency		

Measurement:

Measruement performened on 23.07.2020

As worst case the mode No.: 01 at an input Voltage of 120 V / 60 Hz was found and documented in this report.

IT 1/2

Interference Voltage 150 KHz - 30 MHz

acc. FCC Subpart B 15.107

Cabin 1

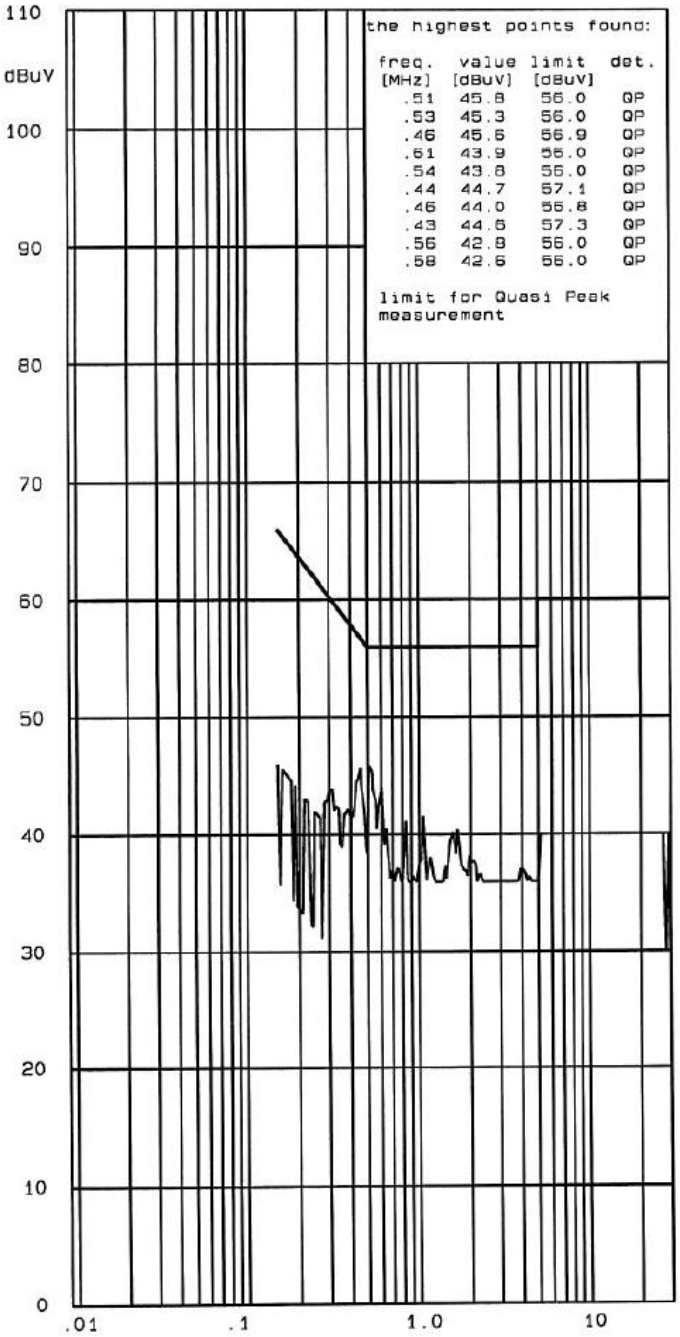

the highest points found:

freq. [MHz]	value [dBuV]	limit [dBuV]	det.
.51	45.8	56.0	QP
.53	45.3	56.0	QP
.46	45.6	56.9	QP
.61	43.9	56.0	QP
.54	43.8	56.0	QP
.44	44.7	57.1	QP
.46	44.0	56.8	QP
.43	44.6	57.3	QP
.56	42.8	56.0	QP
.58	42.6	56.0	QP

limit for Quasi Peak measurement

Ref.-No.: 20/07-0012

Product: Meter

Sample: 01

Date: 23 Jul 2020

Operator: Ji/Gi

Test equipment:

Rohde & Schwarz ESHS 30

Rohde & Schwarz ESH 2-Z5

Connected sets:

Input Voltage 120 V / 60 Hz
Host Laptop APL 28

Operating mode:

Meter active USB con. to PC
and Data transfer via USB
and BLE active
Tested on N

RFI suppression parts:

* two dB safety margin for
type approval recommended

Result: pass [X] fail [ ]

STC Germany GmbH

IT 1/2

Interference Voltage 150 KHz - 30 MHz

acc. FCC Subpart B 15.107

Cabin 1

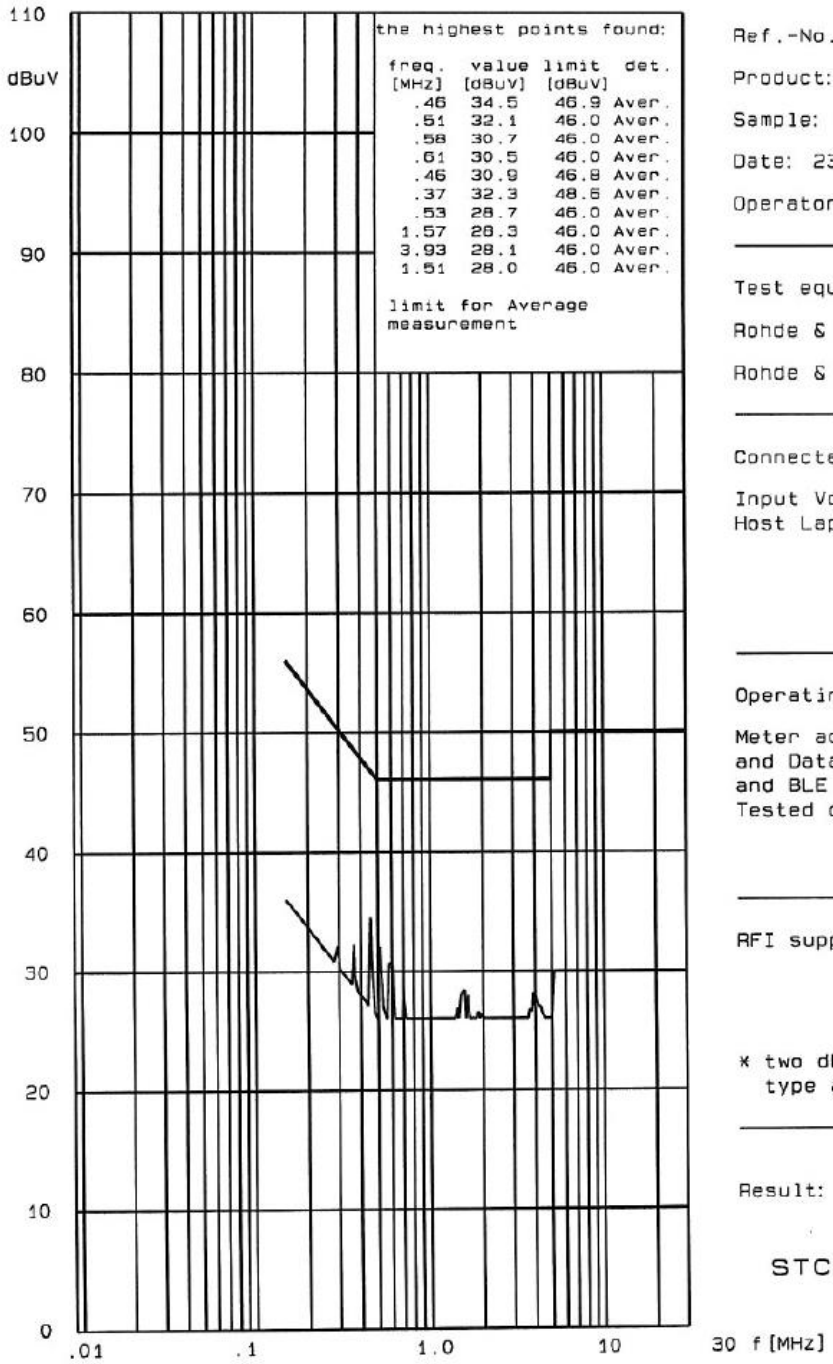

the highest points found:

freq. [MHz]	value [dBuV]	limit [dBuV]	det.
.46	34.5	46.9	Aver.
.51	32.1	46.0	Aver.
.58	30.7	46.0	Aver.
.61	30.5	46.0	Aver.
.46	30.9	46.8	Aver.
.37	32.3	48.6	Aver.
.53	28.7	46.0	Aver.
1.57	28.3	46.0	Aver.
3.93	28.1	46.0	Aver.
1.51	28.0	46.0	Aver.

limit for Average measurement

Ref.-No.: 20/07-0012

Product: Meter

Sample: 01

Date: 23 Jul 2020

Operator: Ji/Gi

Test equipment:

Rohde & Schwarz ESHS 30

Rohde & Schwarz ESH 2-Z5

Connected sets:

Input Voltage 120 V / 60 Hz
Host Laptop APL 28

Operating mode:

Meter active USB con. to PC
and Data transfer via USB
and BLE active
Tested on N

RFI suppression parts:

x two dB safety margin for
type approval recommended

Result: pass [X] fail [ ]

STC Germany GmbH

I T 1 / 2

Interference Voltage 150 KHz - 30 MHz

acc. FCC Subpart B 15.107

Cabin 1

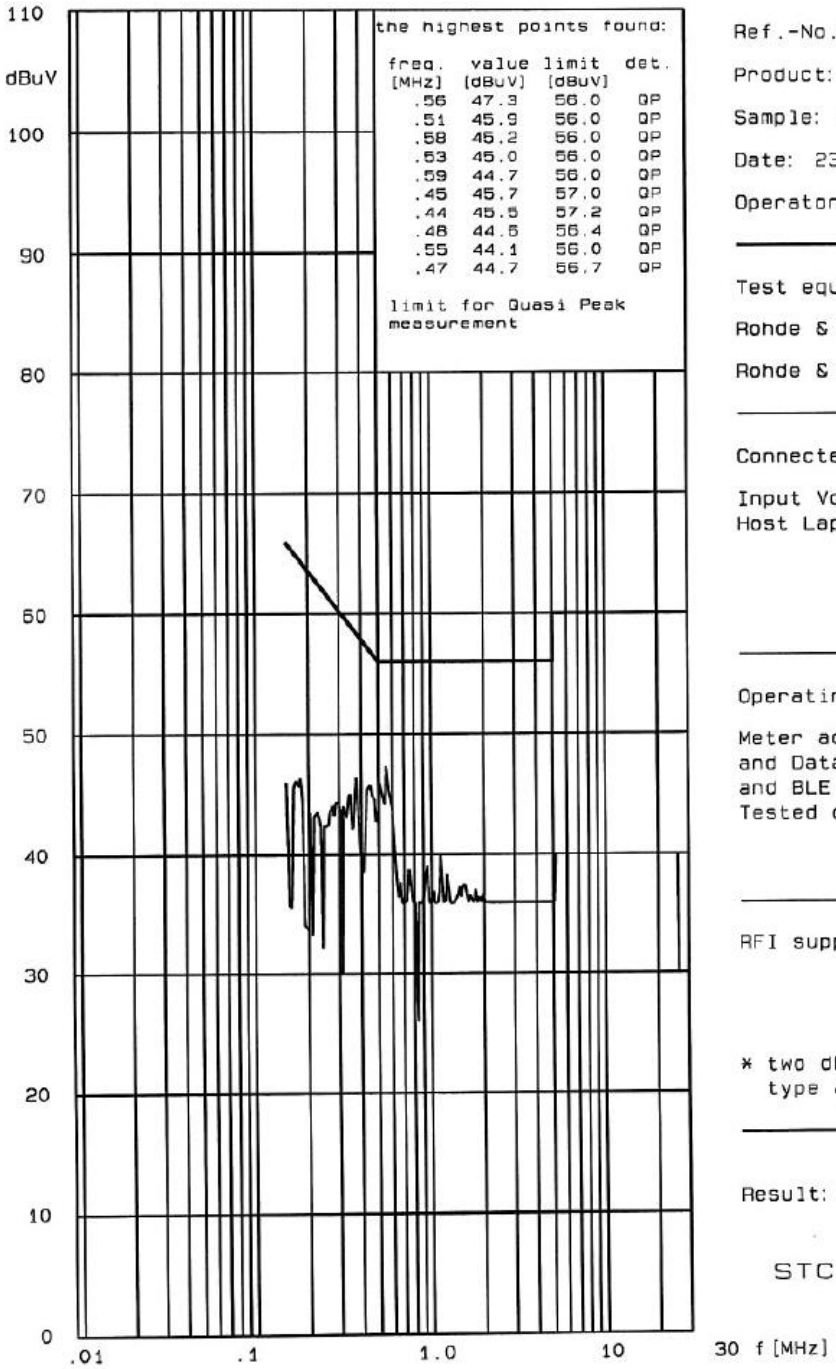

the highest points found:

freq. [MHz]	value [dBuV]	limit [dBuV]	det.
.56	47.3	56.0	QP
.51	45.9	56.0	QP
.58	45.2	56.0	QP
.53	45.0	56.0	QP
.59	44.7	56.0	QP
.45	45.7	57.0	QP
.44	45.5	57.2	QP
.48	44.5	56.4	QP
.55	44.1	56.0	QP
.47	44.7	56.7	QP

limit for Quasi Peak measurement

Ref.-No.: 20/07-0012

Product: Meter

Sample: 01

Date: 23 Jul 2020

Operator: Ji/Gi

Test equipment:

Rohde & Schwarz ESHS 30

Rohde & Schwarz ESH 2-Z5

Connected sets:

Input Voltage 120 V / 60 Hz
Host Laptop APL 28

Operating mode:

Meter active USB con. to PC
and Data transfer via USB
and BLE active
Tested on L1

RFI suppression parts:

* two dB safety margin for
type approval recommended

Result: pass [X] fail [ ]

STC Germany GmbH

I T 1 / 2

Interference Voltage 150 KHz - 30 MHz

acc. FCC Subpart B 15.107

Cabin 1

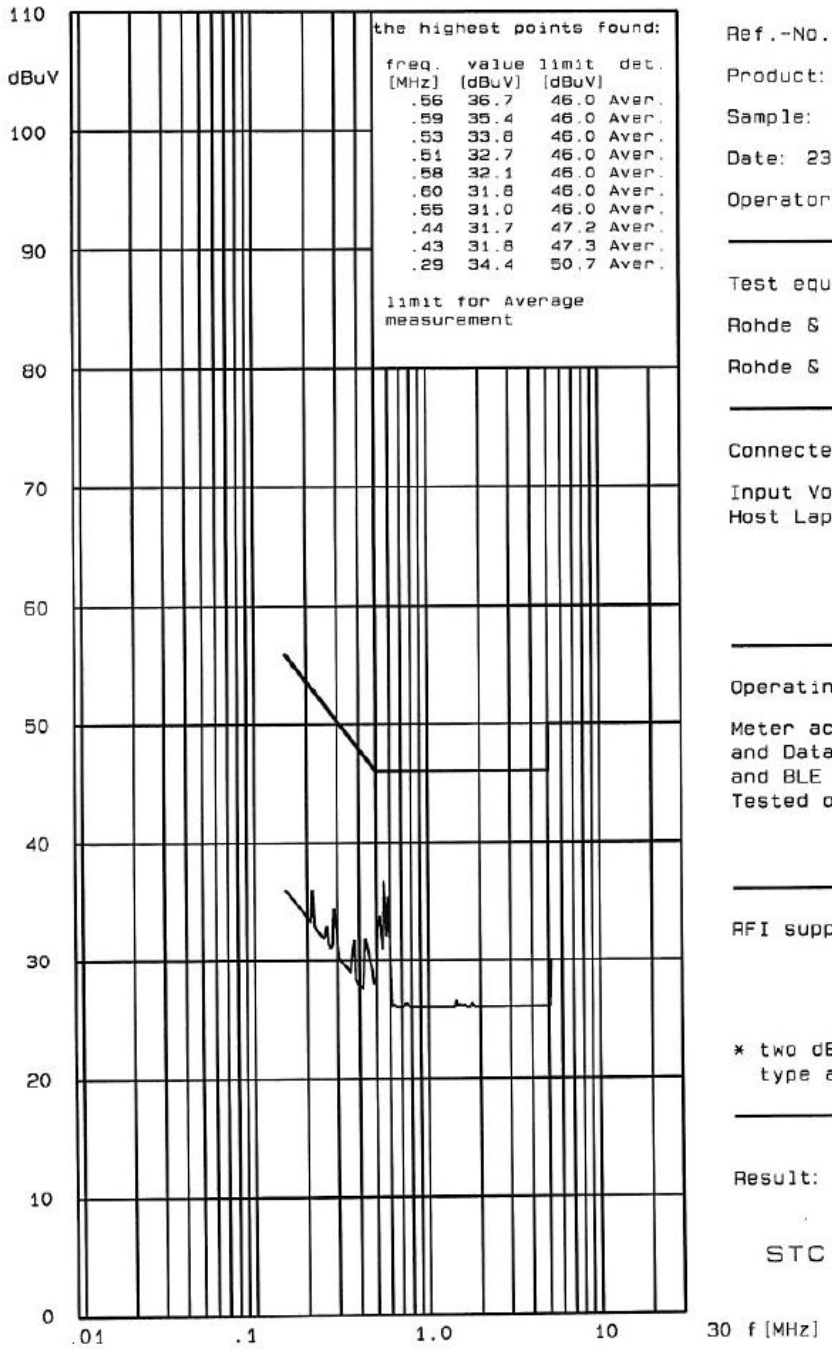

the highest points found:

freq. [MHz]	value [dBuV]	limit [dBuV]	det.
.56	36.7	46.0	Aver.
.59	35.4	46.0	Aver.
.53	33.8	46.0	Aver.
.51	32.7	46.0	Aver.
.58	32.1	46.0	Aver.
.60	31.8	46.0	Aver.
.55	31.0	46.0	Aver.
.44	31.7	47.2	Aver.
.43	31.8	47.3	Aver.
.29	34.4	50.7	Aver.

limit for Average measurement

Ref.-No.: 20/07-0012

Product: Meter

Sample: 01

Date: 23 Jul 2020

Operator: Ji/Gi

Test equipment:

Rohde & Schwarz ESHS 30

Rohde & Schwarz ESH 2-Z5

Connected sets:

Input Voltage 120 V / 60 Hz
Host Laptop APL 28

Operating mode:

Meter active USB con. to PC
and Data transfer via USB
and BLE active
Tested on L1

RFI suppression parts:

* two dB safety margin for type approval recommended

Result: pass [X] fail [ ]

STC Germany GmbH

Remarks:
Composition of the measurement value:

$$\mathbf{M}_{Value} = \mathbf{M}_{rec} + \mathbf{C}_{loss} + \mathbf{LISN}_{cor}$$

M_{Value} = Measurement Value
M_{Rec} = Reading value of test receiver
C_{loss} = Cable loss between Receiver and LISN
$LISN_{cor}$ = LISN correction factor

Sample calculation:

40.8 dBµV = 40.1 dBµV + 0.3 dB +0.4 dB

Results

From the measurement data obtained, the tested sample was considered to have **COMPLIED** with the requirements for the conducted emission measurements.

6. Radiated emission measurements

Test site
Measurement of radiated emissions from EUT was made in the semi-anechoic chamber SAC3 (DC to 40 GHz) located in the test facility.

Applied standards
e-CFR Title 47 Chapter I Subchapter A Part 15 Subpart B, § 15.109 Radiated emission limits

Detector function selection and bandwidth
In radiated emissions measurement, an EMI test receiver that have CISPR quasi-peak detector was used.
The bandwidth of the detector of the EMI test receiver is 120 kHz over the frequency range of 30 to 1000 MHz, emissions to be measured are detected in CISPR quasi peak mode. In the frequency range 1 GHz – 12,5 GHz the used bandwidth was 1000 kHz and emissions to be measured are detected in peak and average mode.

Test equipment and test set up:
Test equipment used for radiated measurements as given in clause Test equipment of this report.
Test setup used for radiated measurements as given in clause Test setups of this report.

Detector function selection and bandwidth
In radiated emissions measurement, an EMI test receiver that have CISPR detectors was used.

Frequency range:		**Bandwidth**
9KHz – 150kHz (Quasi Peak & Average* Detector)	RBW:	200Hz
150KHz – 30MHz (Quasi Peak & Average* Detector)	RBW:	9kHz
30MHz – 1GHz (Quasi Peak Detector)	RBW:	120kHz
Above 1GHz (Peak & Average Detector)	RBW:	1MHz

***Average Detector only in specify frequency range.**

Highest frequency generated or used in the device or on which the device operates or tunes (MHz) Upper frequency of measurement range (MHz)	Upper frequency of measurement range (MHz)
Below 1.705	30
1.705–108	1000
108–500	2000
500–1000	5000
Above 1000	5th harmonic of the highest frequency or 40 GHz, whichever is lower.

Antennas
Measurements were made using a calibrated bilog antenna in the range of 30 to 1000 MHz to determine the emission characteristics of the EUT. Measurements were also made for both horizontal and vertical polarization.
The horizontal distance between the receiving antenna and the EUT was 3 meters.
In the range of 1 GHz to 12,5 GHz measurements were made using a calibrated horn antenna to determine the emission characteristics of the EUT. Measurements were also made for both horizontal and vertical polarization.
The horizontal distance between the receiving antenna and the EUT was 3 meters.

Frequency range to be scanned
For radiated emissions measurements, the spectrum in the range of 30 MHz to 12.5 GHz was investigated as the highest frequency generated is less than 2,48 GHz.

Test conditions and configuration of EUT

The EUT was configured and operated with conditions as mentioned under “Test conditions” in clause 4 of this report.
To find the maximum radiated emission generated from EUT.
During test the EUT was operated with rated Power 120 V~/ 60 Hz, as specified in the user manual of the EUT. The EUT was placed on a 80 cm high non metallic table placed on the turntable. The EUT was rotated and the antenna height was varied between 1 m to 4 m to find the maximum RF energy generated from EUT.

As worst case the mode No.: 01 at an input Voltage of 120 V / 60 Hz was found and documented in this report.

Class B Requirements

Frequency MHz	**Limits [µV/m] Quasi-peak**	**Limits [dBµV/m] Quasi-peak**	**Limits [µV/m] Average**	**Limits [dBµV/m] Average**	**Test distance [m]**
30 - 88	100	40	-/-	-/-	3
88 - 216	150	43.5	-/-	-/-	3
216 - 960	200	46	-/-	-/-	3
960 - 1000	500	54	-/-	-/-	3
Above 1000	/-	-/-	500 / 5000	54 / 74	3

Measurements

The Measurement was performed on: 26.01.2021

Result 30 MHz – 1000 MHz

TESTED IN GERMANY

IT 5/6

Interference radiation

acc.FCC Subpart B § 15.109

STC

Ref.-No.:	20/07-0012
Product:	Meter
Sample:	01
Date:	26.01.2021
Operator:	Bl
Remarks:	All cables connected; Input Voltage: 120V/60Hz

Result: pass ☒ fail ☐

Final Measurement

Operation mode: Meter active; USB connected to PC-Datatransfer via USB; Bluetooth (LE) active

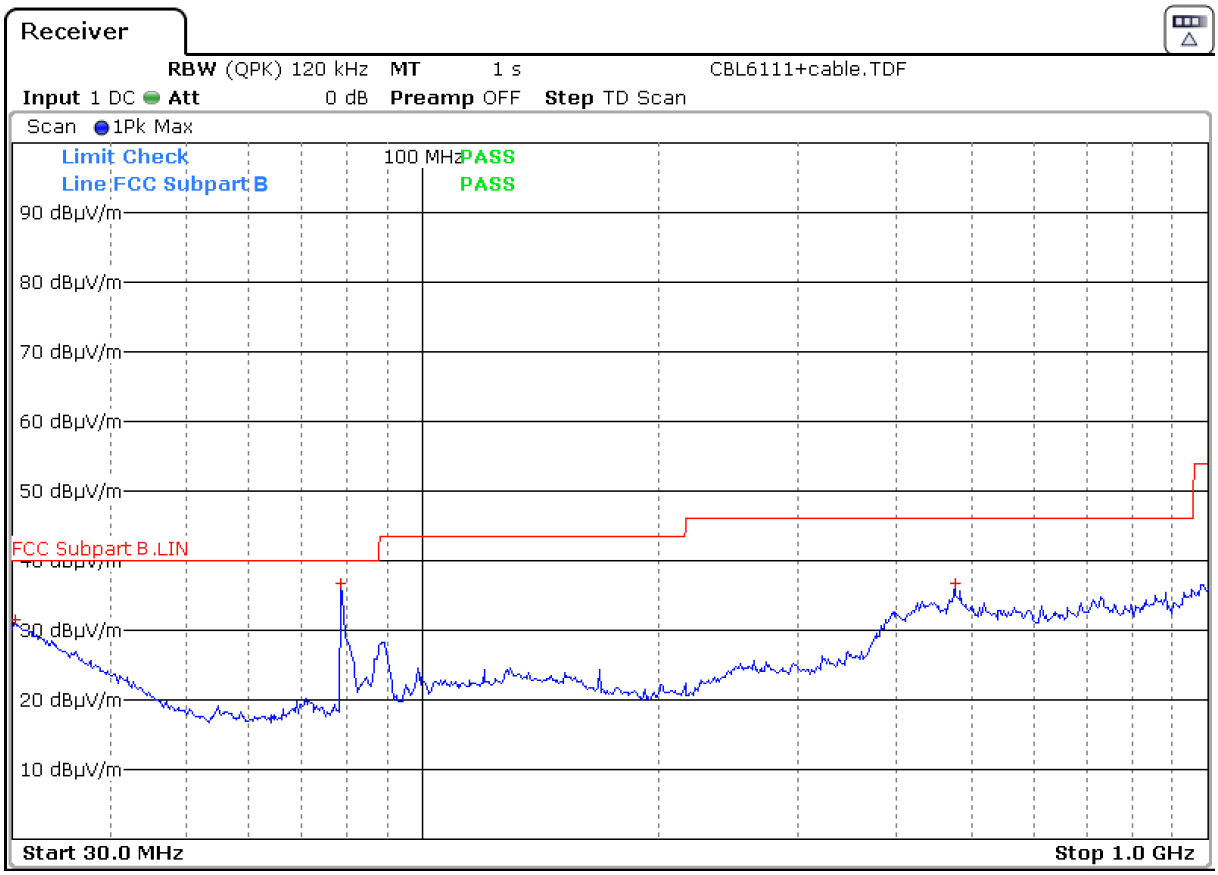

Polarisation: V									
Scan Detector Peak					Final Detector Quasi Peak				
Frequ. [MHz]	Level [dBµV/m]	Margin to Limit [dB]	Limit [dBµV/m]	Result	Frequ. [MHz]	Level [dBµV/m]	Margin to Limit [dB]	Limit [dBµV/m]	Result
78,72	36,65	-3,35	40,00	pass					
30,27	31,60	-8,40	40,00	pass					
475,98	36,64	-9,36	46,00	pass					
*Retest with Quasi Peak					Retest with Quasi Peak Detector not required				

Operation mode: Meter active; USB connected to PC-Datatransfer via USB; Bluetooth (LE) active

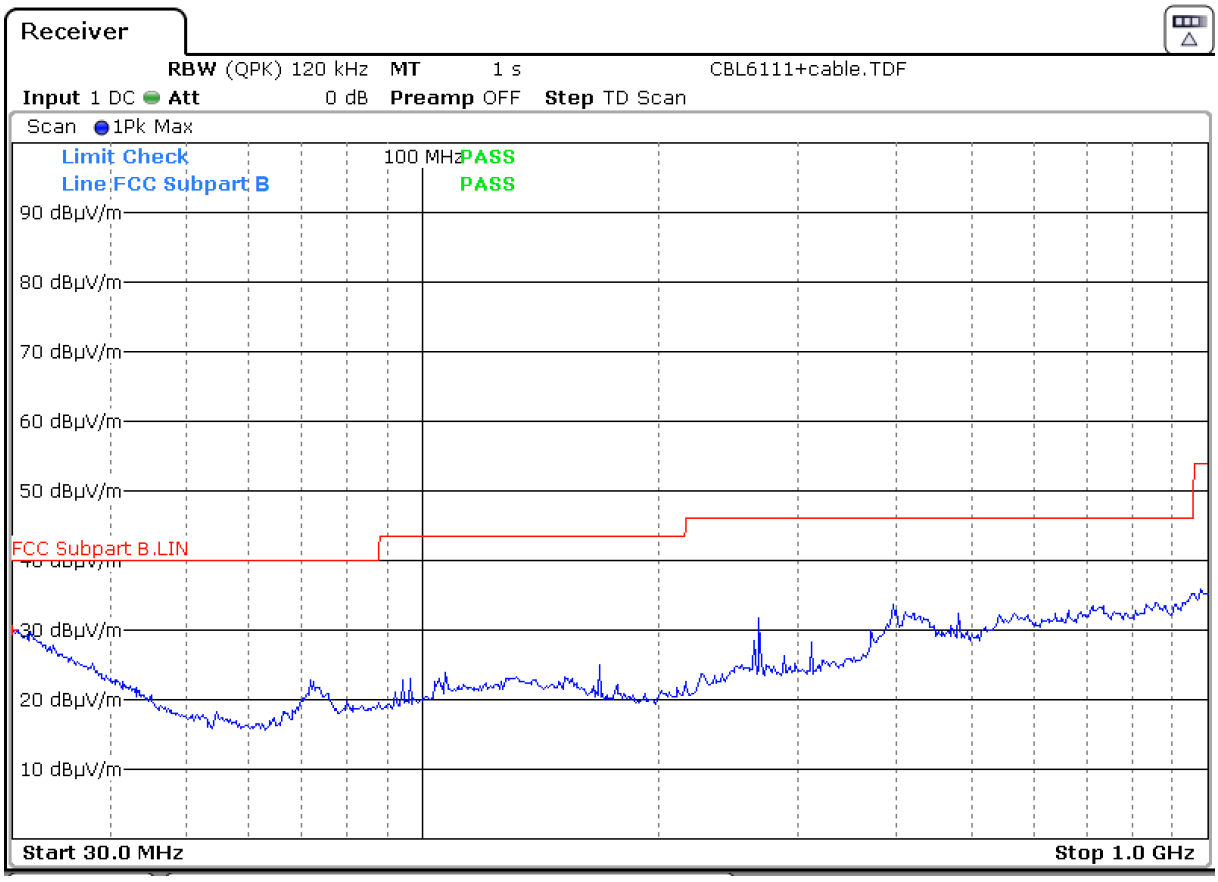

Polarisation: H									
Scan Detector Peak					Final Detector Quasi Peak				
Frequ. [MHz]	Level [dBµV/m]	Margin to Limit [dB]	Limit [dBµV/m]	Result	Frequ. [MHz]	Level [dBµV/m]	Margin to Limit [dB]	Limit [dBµV/m]	Result
30,00	30,05	-9,95	40,00	pass					
*Retest with Quasi Peak					Retest with Quasi Peak Detector not required				

Remarks:
Composition of the measurement value (Freq.range 30 Mhz – 1000 Mhz)

$$\mathbf{M}_{Value} = \mathbf{M}_{rec} + \mathbf{C}_{loss} + \mathbf{AF}_{rec}$$

M_{Value} = Measurement Value
M_{Rec} = Reading value of test receiver
C_{loss} = Cable loss between Receiver and LISN
AF_{rec} = Antenna factor

Sample calculation:

38.7 dBµV = 18.3 dBµV + 0.6 dB + 19.8 dB

Result 1GHz – 7 GHz

TESTED IN GERMANY

IT 5/6

Interference radiation

acc.FCC Subpart B § 15.109

STC

Ref.-No.:	20/07-0012			
Product:	Meter			
Sample:	01			
Date:	27.01.2021			
Operator:	BI		pass	fail
Remarks:	All cables connected; Input Voltage: 120V/60Hz	Result:	☒	☐

Operation mode: Meter active; USB connected to PC-Datatransfer via USB; Bluetooth (LE) active

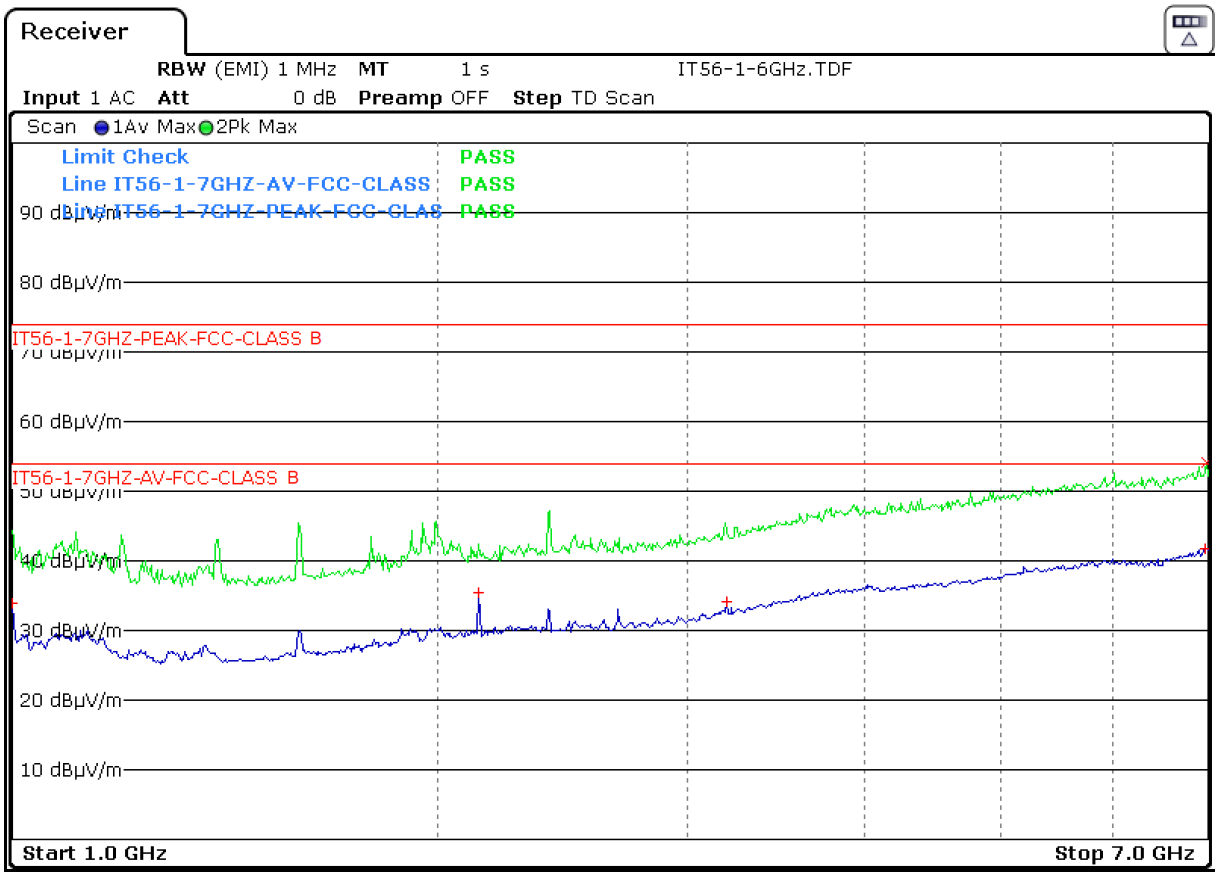

Polarisation: V									
Detector Average					Detector Peak				
Frequ. [GHz]	Level [dBµV/m]	Margin to Limit [dB]	Limit [dBµV/m]	Result	Frequ. [GHz]	Level [dBµV/m]	Margin to Limit [dB]	Limit [dBµV/m]	Result
6,9683	41,81	-12,19	54,00	**pass**	1 - 7	-/-	>20	74	**pass**
2,1335	35,50	-18,50	54,00	**pass**					
3,2003	34,19	-19,81	54,00	**pass**					
6,9800	54,05	-19,95	74,00	**pass**					
1,0000	34,02	-19,98	54,00	**pass**					

Operation mode: Meter active; USB connected to PC-Datatransfer via USB; Bluetooth (LE) active

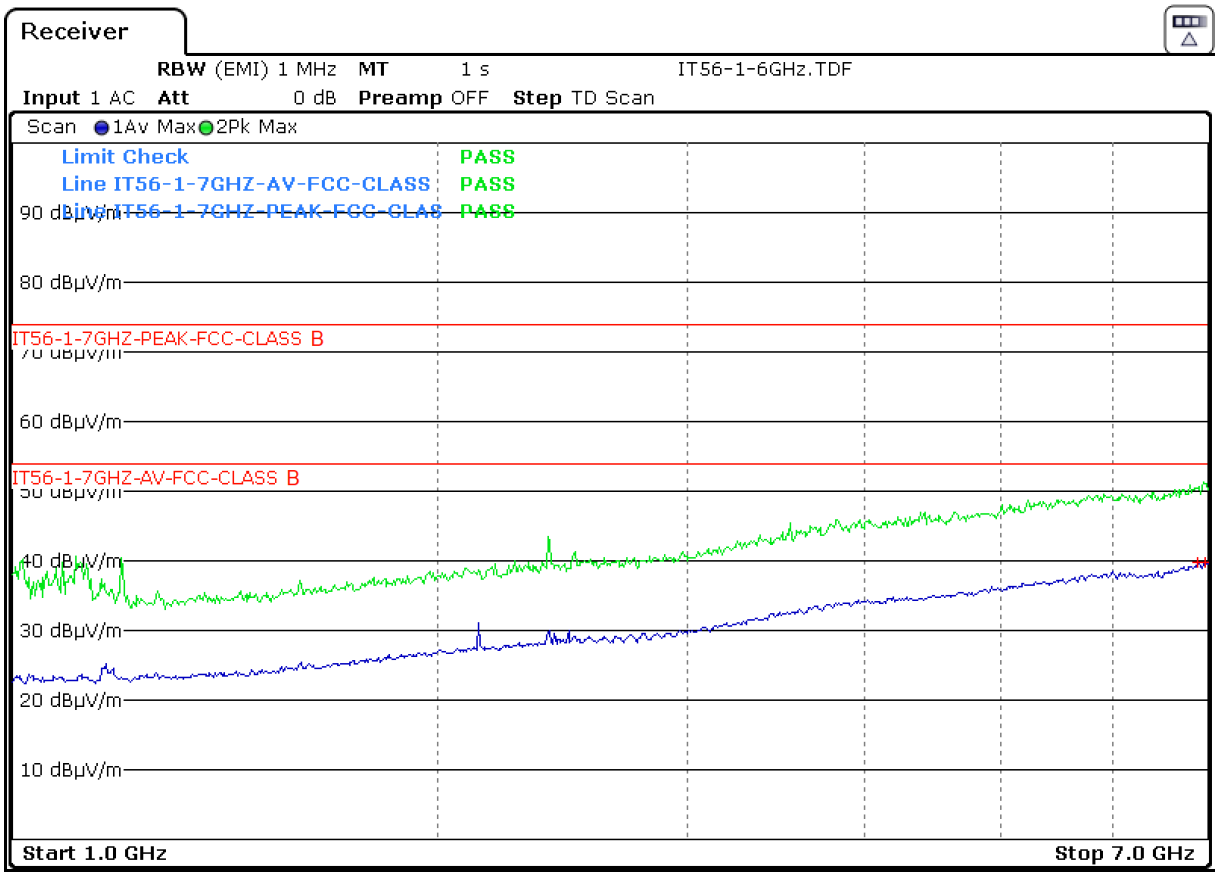

Polarisation: H									
Detector Average					Detector Peak				
Frequ. [GHz]	Level [dBµV/m]	Margin to Limit [dB]	Limit [dBµV/m]	Result	Frequ. [GHz]	Level [dBµV/m]	Margin to Limit [dB]	Limit [dBµV/m]	Result
6,8843	39,80	-14,20	54,00	**pass**	1 - 7	-/-	>20	74	**pass**
6,9628	39,76	-14,24	54,00	**pass**					

Result 7GHz – 12.5 GHz

All emissions in the frequency range 7 GHz – 12.5 GHz are at least 6 dB below the relevant limit

Remarks:
Composition of the measurement value (Freq.range > 1 GHz)

$$\mathbf{M}_{Value} = \mathbf{M}_{rec} + \mathbf{C}_{loss} + \mathbf{AF}_{rec} - \mathbf{G}_{amp}$$

M_{Value} = Measurement Value
M_{Rec} = Reading value of test receiver
C_{loss} = Cable loss between Receiver and LISN
AF_{rec} = Antenna factor
G_{amp} = Gain Amplifier

Sample calculation:

39.7 dBµV = 53.01 dBµV + 0.9 dB + 24.19 dB – 38.4 dB

Results
From the measurement data obtained, the tested sample was considered to have **COMPLIED** with the requirements for the radiated emission measurements.

7. Test equipment

Test equipment used for radiated Measurements:

Kind of equipment	Manufacturer	Type	Ident no.	Serial no.	Calibrated on (y-m-d)	Calibration interval
Signal Spectrum Analyzer 2Hz - 26,5 GHz	Rohde & Schwarz	FSW 26 Instrument FW 2.60	11571	102047	2019-Jan.	3 year
ESR7 EMI Testreceiver 7GHz	Rohde & Schwarz	ESR7	11676	101694	2018-March	3 years
Test-Receiver	Rohde & Schwarz	ESVS30	10572	833825/010	2020-April	3 years
Antenna 9 kHz – 30 MHz	EMCO	6502	10546	2018	2020-Nov.	3 years
Antenna 30 MHz – 1 GHz	Chase	CBL6111C	10022	1064	2019-Dec.	3 years
Antenna 1GHz – 18 GHz	Electro Metric	RGA50/60	10273	2753	2020-Nov.	3 years
Broadband-Hornantenne 15 - 26,5 (40) GHz	Schwarzbeck	BBHA 9170	11580	BBHA9170621	2019-Dec.	3 years
Broadband-Preamplifier 1-18 GHz	Schwarzbeck	BBV9718	11231	9718-002	2020-Oct.	3 year
Preamplifier 18 - 40 GHz	CERNEX	CBM18403523	11679	29711	2019-July	3 year
Cable	el-spec GmbH	FlexCore-SMA11-SMA11-8000-ARM	11625	-/-	2020-Oct.	3 years
Band Reject Filter	Telemeter	BRF-2450-150-7-N (0441)	11243	-/-	-/-	-/-
Shielded room/Chamber	Frankonia	SAC3 "SEMI-ANECHOIC-CHAMBER"	11609	004/16	2019-March	3 years

Test equipment used for Conducted Mains emissions:

Kind of equipment	Manufacturer	Type	Ident no.	Serial no.	Calibrated on	Calibration interval
EMI-Test-Receiver	Rohde & Schwarz	ESR7 Instrument FW 3.36	11676	101694	2018 – Mar.	3 year
Software	PKM	PKM U5/6	-/-	V1.01.03	-/-	-/-
Line impedance stabilisation network (LISN)	Rohde & Schwarz	ESH2-Z5	10139	879675/028	2019 – Jan.	3 year
Shielded room	Siemens	(6,2 x 4,7 x 3,3) m (l x w x h) DC – 10 GHz	10113	1	-/-	-/-

All measurements were made with measuring instruments, including any accessories that may affect test results, calibrated according to the requests of ISO/IEC 17025 according to which the test site is accredited from DAkkS. Measurement of conducted emissions was made with instruments conforming to American National Standard Specification, ANSI C63.4-2014.

8. Test Setup

Block diagram Radiated emissions

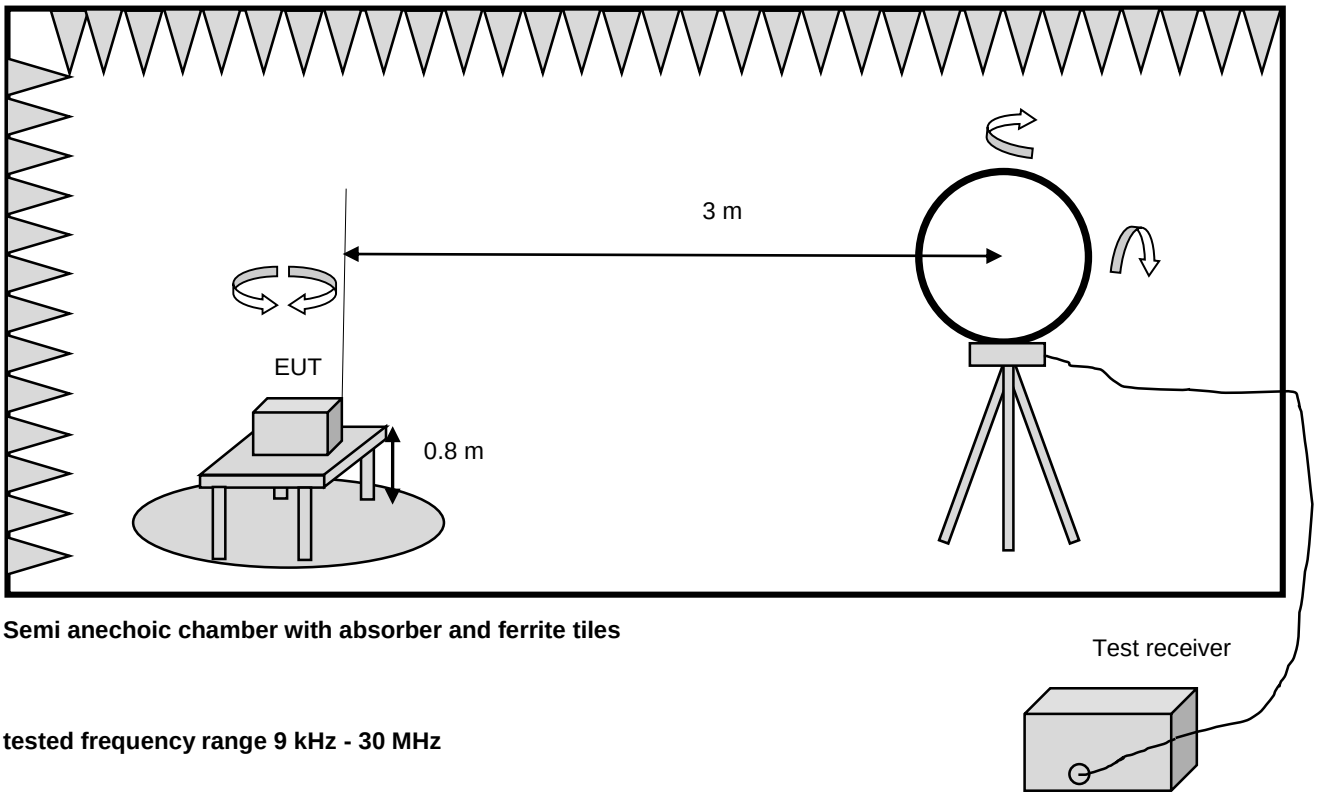

Semi anechoic chamber with absorber and ferrite tiles

tested frequency range 9 kHz - 30 MHz

Block diagram Radiated emissions

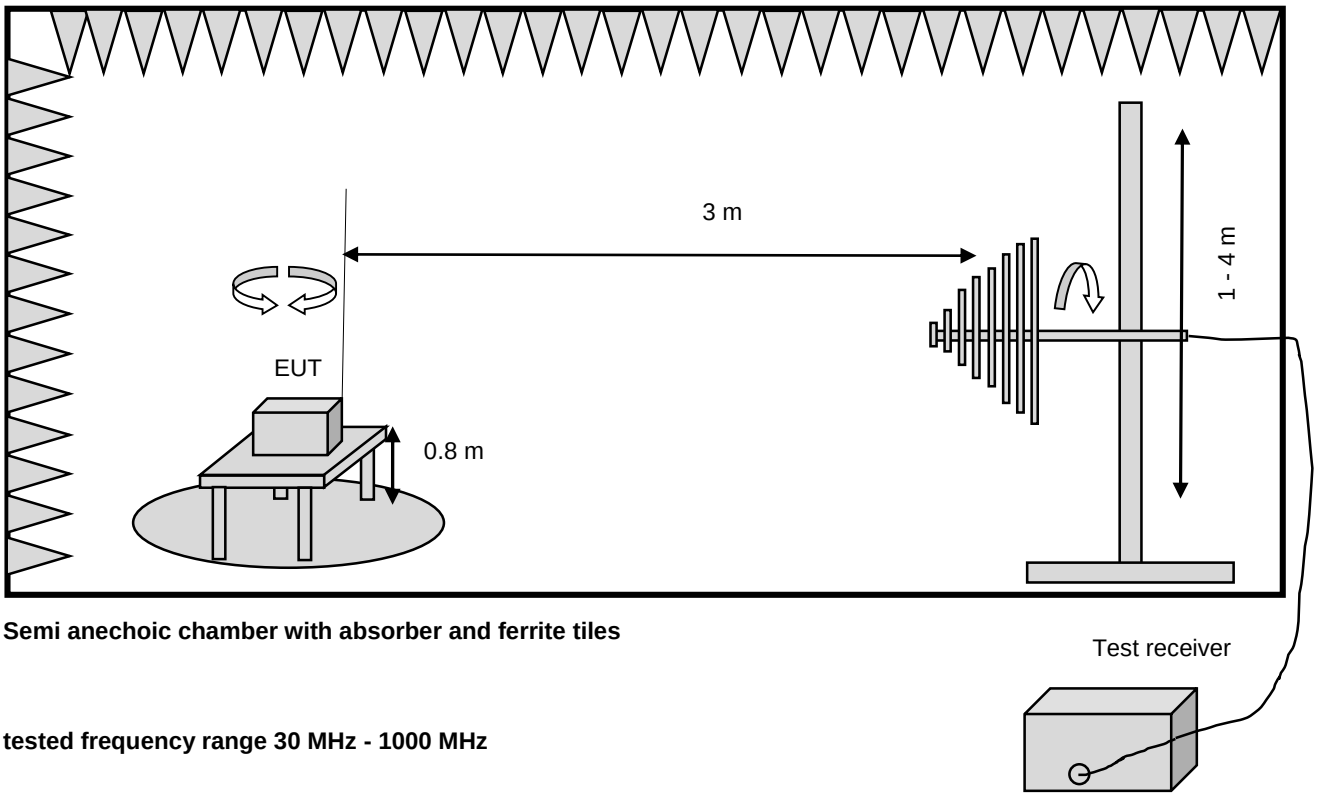

Semi anechoic chamber with absorber and ferrite tiles

tested frequency range 30 MHz - 1000 MHz

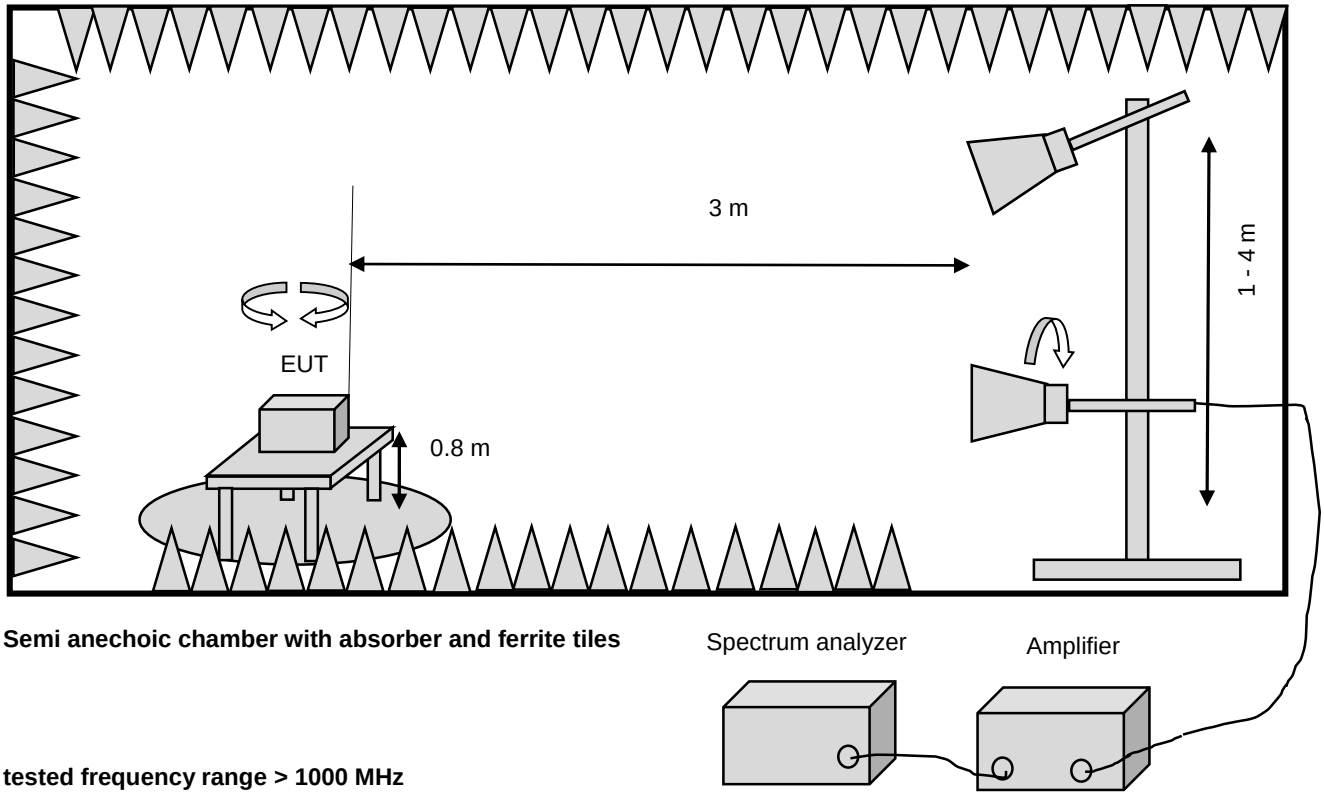

Semi anechoic chamber with absorber and ferrite tiles

tested frequency range > 1000 MHz

Block diagram Conducted Mains emissions

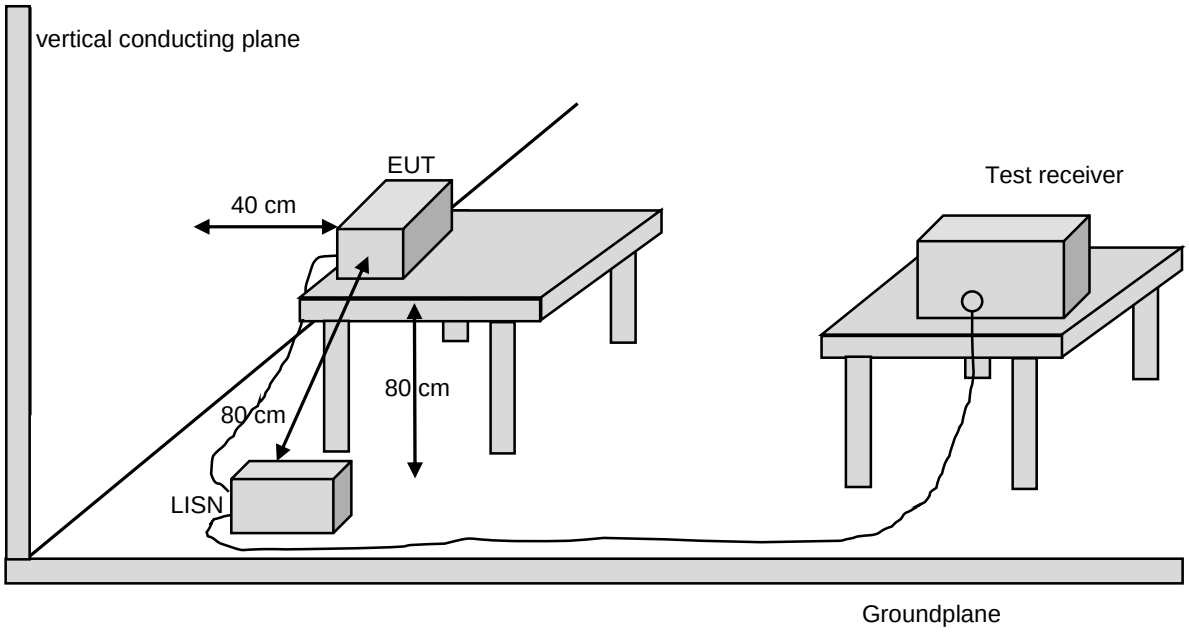

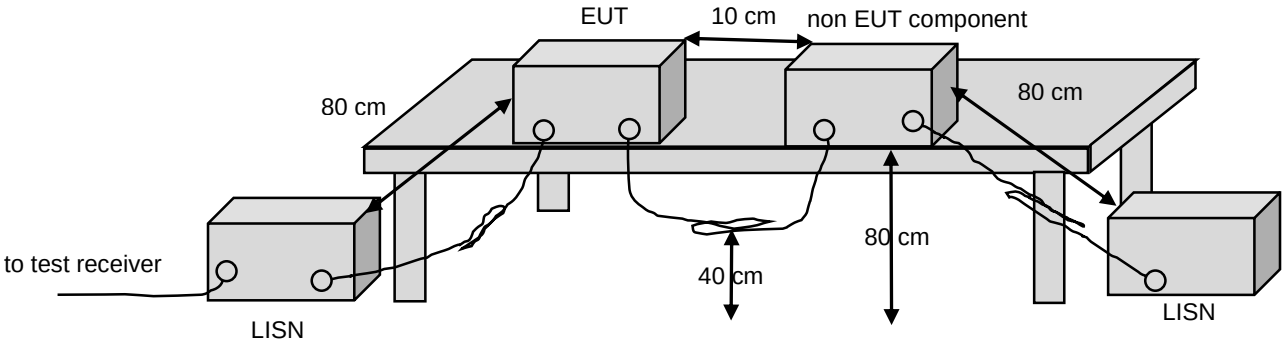

9. Measurement uncertainty

according to *CISPR 16-4-2 Edition 2.0 2011-06*

Measurement	**calculated uncertainty U_{lab}**	**Specified CISPR uncertainty according CISPR 16-4-2 Edition 2.0 2011-06, table 1 U_{CISPR}**
Conducted disturbance at mains port using AMN 9 kHz – 150 kHz	3.6 dB	3.8 dB
Conducted disturbance at mains port using AMN 150 kHz – 30 MHz	3.2 dB	3.4 dB
Magn. fieldstrength 9kHz - 30MHz	3.4 dB	-/-
Radiated disturbance (electric field strength in the SAC) 30 MHz to 1 000 MHz	4.7 dB	6.3 dB
Radiated disturbance (electric field strength in the SAC) 1 GHz to 26.5 GHz	4.1 dB	-/-

Measurement	**calculated uncertainty U_{lab}**	**Maximum measurement uncertainty**
Channel Bandwidth	±1.17 %	±5 %
RF output power, conducted	±1.36 dB	±1.5 dB
Power Spectral Density, conducted	±1.99 dB	±3 dB
Unwanted Emissions, conducted	±1.71 dB	±3 dB
All emissions, radiated	±4.8 dB	±6 dB
Temperature	±0.72 °C	±3 °C
Supply voltages	±0.76 % (DC up to 40V) ±1.74 % (AC 50Hz up to 400V)	±3 %
Time	±0.012 %	±5 %

The measurement uncertainty describes the overall uncertainty of the given measured value during the operation of the EUT in the above mentioned way.

The measurements uncertainty was calculated in accordance with CISPR 16-4-2 Edition 2.0 2011-06.

The measurement uncertainty was given with a confidence of 95 % (k = 2).

10. Photos setup

Refer to “0012-fcc-photos test setup.pdf” file

11. CONCLUSIONS

From the measurement data obtained, the tested sample was considered to have **COMPLIED** with the requirements for the relevant clauses of Federal Communications Commission Rules for unintentional radiators e-CFR Title 47 Chapter I Subchapter A Part 15 Subpart B.

§ 15.107 (a) Conducted limits, class B	PASS (margin to limit 8,7 dB)
§ 15.109 (a) Radiated limits, class B	PASS (margin to limit 3,35 dB)

Following specific modifications and/or special attributes are necessary to pass the above mentioned requirements:

None

08.02.2021	K. Gisbert, Senior Engineer	
Erstellt am/*prepared on*	**(Name/***name* / **Stellung/***position***)**	**(Unterschrift/***signature***)**
08.02.2021	K. Simon, Head of Laboratory	
Freigabe am/released *on*	**(Name/***name* / **Stellung/***position***)**	**(Unterschrift/***signature***)**

12. Photos of tested sample(s)

DiaSpect Tm
EKF
DIAGNOSTICS

DiaScan Tm

DiaSpect Tm
HEMOGLOBIN

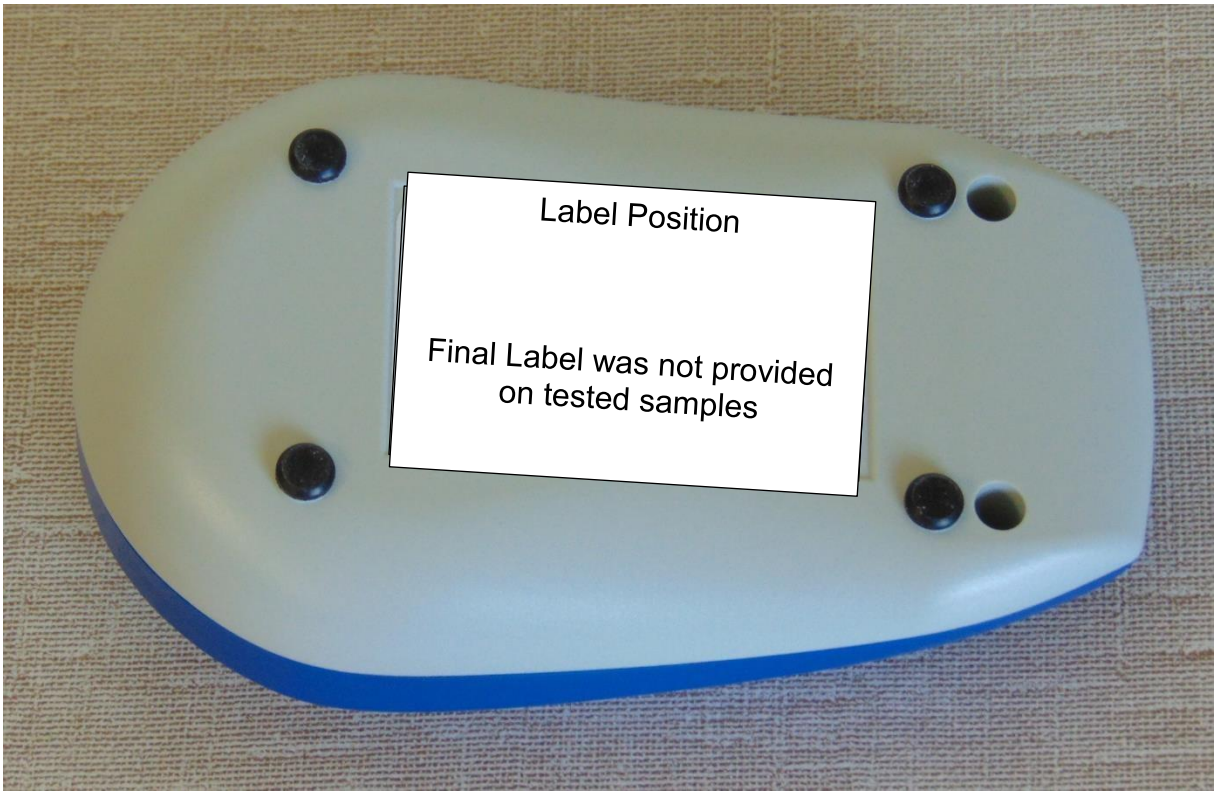
Label Position
Final Label was not provided on tested samples

CUI INC
Switching Adapter
CUI Japan
I.T.E. L.P.S
81GJ
E210311
LISTED
Made In China

CUI INC
Switching Adapter
EFFICIENCY LEVEL
CUI Japan
LTE L.P.S
81GJ
E210311
LISTED
Made in China

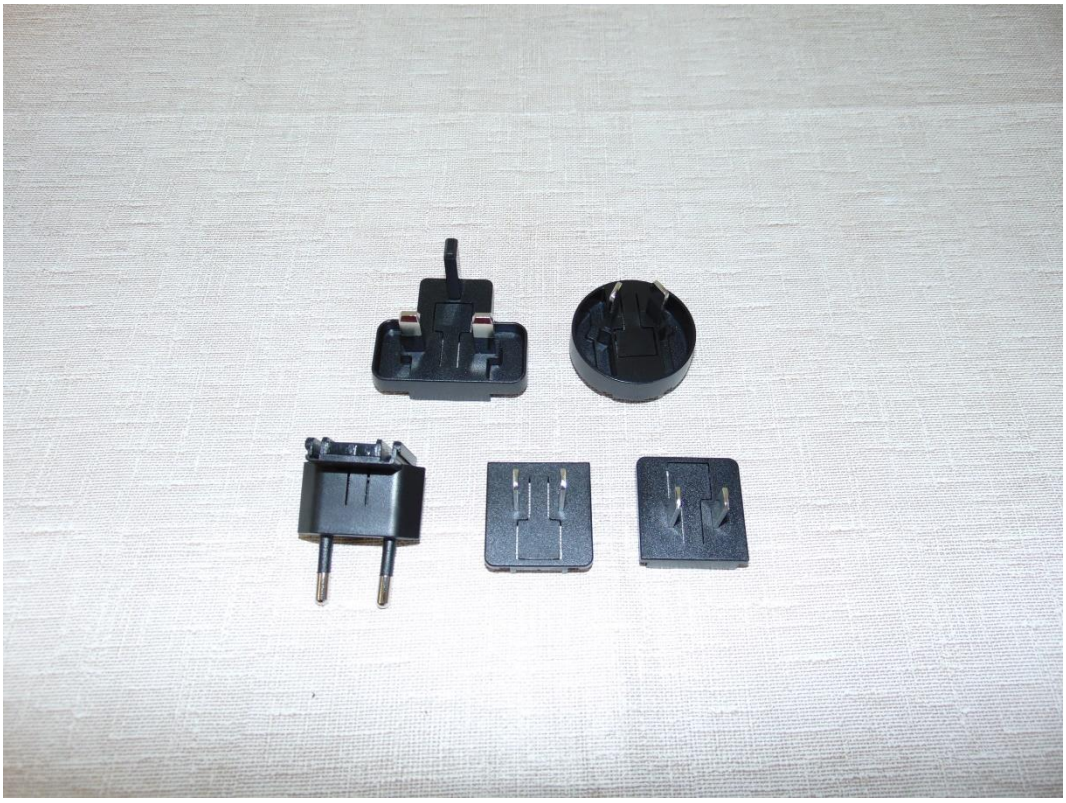

End of test report