lavanda®

Active Noise Cancellation

True Wireless Stereo

PRODUCT SPECIFICATION

Product	LUNE ANC TWS Earphone
Model	AQS1
Bluetooth Chipset	Airoha 155X
Bluetooth Version	5.0
Bluetooth Profile	HFP/A2DP/ HSP/AVRCP
Range	Up to 20M
Battery Life	Up to 8hrs w/ extra 16hrs
Charging Port	Type-C
Active Noise Cancellation	-30dB Hybrid (Feedforward+Feedback)
Driver	Φ9mm*2
Battery Capacity in Earbuds	50mAh
Battery Capacity in Charging Dock	360mAh
Earbuds Charging Time	1.5hr
Earbuds Weight	5g*2
Charging Dock Weight	37g
Software	APP, Voice Assistant, FOTA

OVERVIEW AND ACCESSORIES

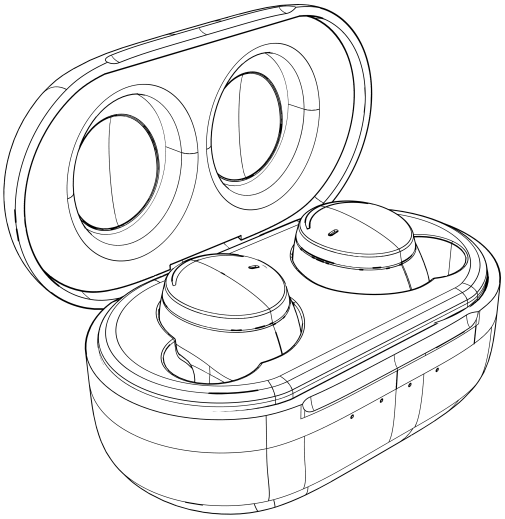

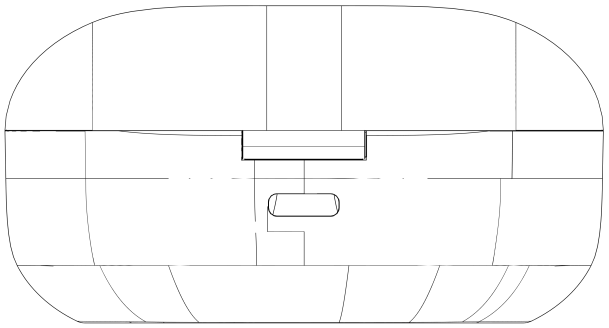

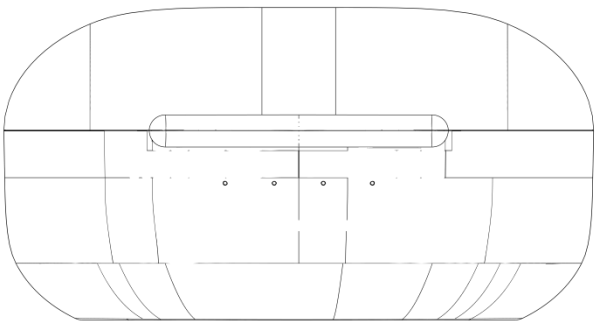

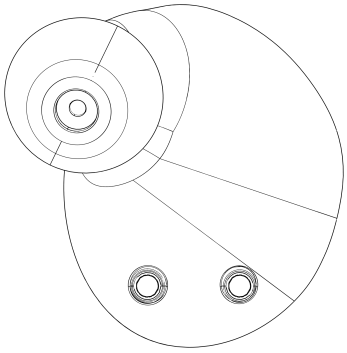

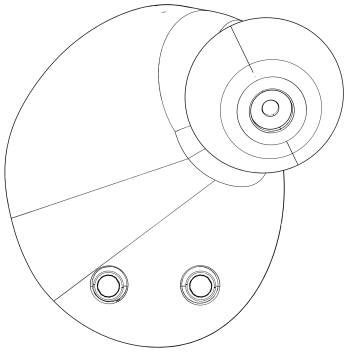

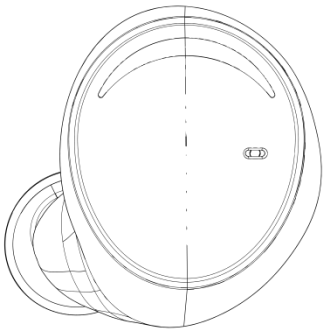

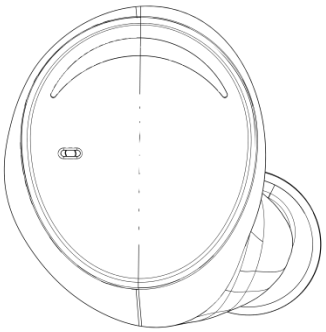

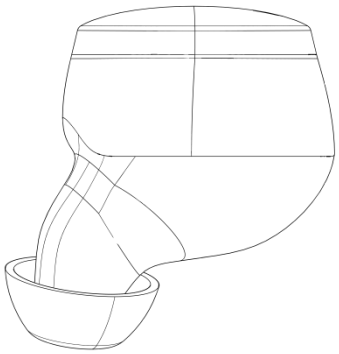

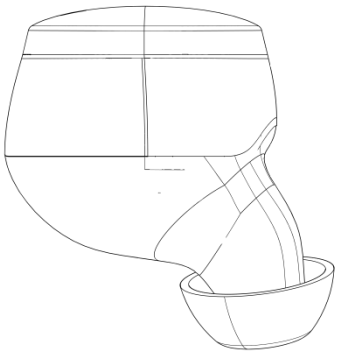

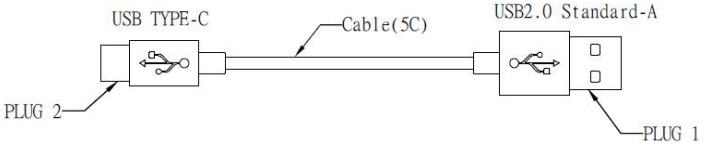

Eartips

PAIR TO YOUR DEIVCE

First Time Pairing

1. Take out earbuds from charging dock.
2. The earbuds automatically power on and enter pairing mode. Blue and Red LEDs blink alternately on either one side. If earbuds fail to power on, please charge them and try again.
3. Turn on the bluetooth on your device. Search for “DualRad TWS” and tap to connect.

***Once paired for the first time, DualRad earbuds automatically pair to your device in the future use.

Switch Paired Device

1. Simply turn off the bluetooth on your paired device, earbuds automatically disconnect from paired device and switch to pairing mode.

   Or

   Make sure both of the earbuds are connected to your paired device. Long press 5 seconds on either side earbud to disconnect from paired device and switch to pairing mode.
2. Follow pairing steps to connect to a new device.

*** Long press 5 seconds on both sides simultaneously will manually power off the earbuds.

POWER ON/OFF

- Power On:Take out earbuds from charging dock. Or long press 3 seconds.
- Power Off:Put back earbuds to charging dock. Or long press 5 seconds.

***In TWS mode, long press 5 seconds on both sides simultaneously to power off the earbuds.

TOUCH CONTROL

Mono Use

Left/Right			
Key / Status	Short Click	Double Click	Long Press 2s and Release
Idle		Pairing	Voice Assistant
Music play	Play/Pause	Next	Voice Assistant
Incoming Call	Answer/Hang up		Reject

Stereo Use

Left			
Key / Status	Short Click	Double Click	Long Press 2s and Release

Idle	Pass Through/ANC/Normal	Pairing	Voice Assistant
Music Play	Pass Through/ANC/Normal	Previous	Voice Assistant
Incoming Call	Answer/Hang up		Reject

Right			
Key / Status	Short Click	Double Click	Long Press 2s and Release
Idle		Pairing	
Music Play	Play/Pause	Next	Voice Assistant
Incoming Call	Answer/Hang up		Reject

INDICATING LIGHTS

EARBUDS	
Status	LED
Power On	Red LED blinks 3 times
BT Recon	Blue LED blinks 1 time per second
BT Pairing	Red&Blue LED blink alternately
L/R Air Pairing	Red&Blue LED blink instantaneously
BT Con	Blue LED blinks 1 time every 8 seconds
BT Music	NO LED
BT Call	NO LED
Power off	Red LED blinks 2 times
Charging	RED LED is always on
Fully Charged	Red LED is out

CHARGING DOCK	
◐ ○ ○ ○	0%-25%
● ◐ ○ ○	25%-50%
● ● ◐ ○	50%-75%
● ● ● ◐	75%-99%
● ● ● ●	100%

HAZARDOUS SUBSTANCE

Hazardous substances and their contents in the item										
Part Name	Hazardous Substances									
	Pb	Hg	Cd	Cr(VI)	PBB	PBDE	DIBP	DEHP	DBP	BBP
Main body	O	O	O	O	O	O	O	O	O	O
Ear tips	O	O	O	O	O	O	O	O	O	O
Charging box	O	O	O	O	O	O	O	O	O	O
Charging cable	O	O	O	O	O	O	O	O	O	O

FCC Statement

This equipment has been tested and found to comply with the limits for a Class B digital device, pursuant to Part 15 of the FCC Rules. These limits are designed to provide reasonable protection against harmful interference in a residential installation. This equipment generates uses and can radiate radio frequency energy and, if not installed and used in accordance with the instructions, may cause harmful interference to radio communications. However, there is no guarantee that interference will not occur in a particular installation. If this equipment does cause harmful interference to radio or television reception, which can be determined by turning the equipment off and on, the user is encouraged to try to correct the interference by one or more of the following measures:

-- Reorient or relocate the receiving antenna.

-- Increase the separation between the equipment and receiver.

-- Connect the equipment into an outlet on a circuit different from that to which the receiver is connected.

-- Consult the dealer or an experienced radio/TV technician for help.

This device complies with part 15 of the FCC Rules. Operation is subject to the following two conditions:(1) This device may not cause harmful interference, and (2) this device must accept any interference received, including interference that may cause undesired operation.

Any Changes or modifications not expressly approved by the party responsible for compliance could void the user's authority to operate the equipment.

The device has been evaluated to meet general RF exposure requirement. The device can be used in portable exposure condition without restriction.