Airplove

Model: AP-M1010L

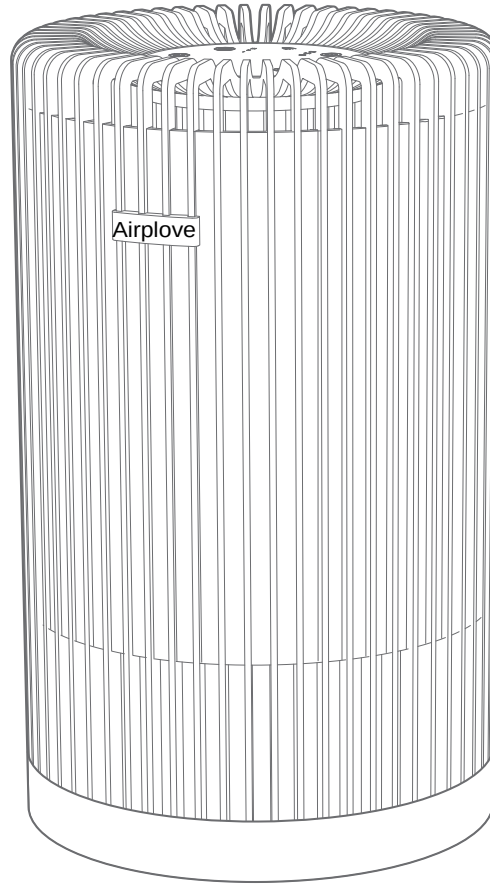

User Manual

Table Of Comtents

Safety Instructions	01
Package Includes	03
Specifications	03
Getting To Know Your Air Purifier	04
Getting Started	05
Using Your Air Purifier	06
Pairing Your Air Purifier With Govee Home App	08
About The Filters	09
Care And Maintenance	10
Resetting The Filter Change Indicator	11
Troubleshooting	12

READ AND SAVE THESE INSTRUCTIONS

Safety Instructions

1.General Safety

- Only use Air Purifier as described in this manual.
- Do not use without removing the plastic wrap from the filter. If not removed, the air purifier will not filter air, and may overheat, causing a fire hazard.
- Do not use the air purifier outdoors.
- Keep the air purifier away from water or wet, damp areas. Never place in water or liquid.
- Do not use in excessively humid areas.
- Keep the air purifier away from heat sources such as stovetops, ovens, or radiators.
- Do not use where combustible gases, vapors, metallic dust, aerosol (spray) products, or fumes from industrial oil are present.
- Keep 5 feet / 1.5m away from where oxygen is being administered.
- Supervise children when they are near the air purifier.
- Do not place anything into the openings of the air purifier.
- Do not place heavy objects on the air purifier.
- Keep the inside of the air purifier dry. To prevent moisture build up, avoid placing in rooms with major temperature changes or underneath air conditioners.
- Always unplug the air purifier before servicing (such as when changing the filter).
- Do not use the air purifier if it is damaged or not working correctly, or if the power cord or plug is damaged. Do not repair yourself. Contact Customer Support
- WARNING: To reduce the risk of fire or electric shock, do not use this air purifier in combination with any 3rd party controls (such as a dimmer switch).
- Not for commercial use. Household use only.

2.Power Cord & Plug

- Located the air purifier near the electrical outlet it is plugged into.
- Never place the power cord near any heat sources.
- Do not cover the power cord with a rug, carpet, or other covering. Do not place the cord under furniture or appliances.
- Keep the power cord out of areas where people frequently walk. Place the cord where it will not be tripped over.
- This air purifier has a polarized plug (one prong is wider than the other), which fits into a polarized outlet in only one orientation. This is a safety feature to reduce the risk of electric shock. If the plug does not fit, reverse the plug to the correct orientation. If it still does not fit, do not bypass this safety feature and try forcing the plug into the outlet. Instead, do not use it with the outlet.
- This air purifier uses standard US 120V, 60Hz outlets. If using outside the US, check for compatibility.

LIRE ET CONSERVER CES INSTRUCTIONS

La consignes de sécurité

1.La sécurité générale

- Utilisez le purificateur d'air intelligent seulement comme décrit dans ce manuel.
- Ne pas utiliser sans retirer le film plastique du filtre. S'il n'est pas retiré, le purificateur d'air ne filtrera pas l'air et peut surchauffer, provoquant un risque d'incendie.
- N'utilisez pas le purificateur d'air à l'extérieur.
- Gardez le purificateur d'air loin de l'eau ou des zones humides. Ne jamais placer dans l'eau ou dans un liquide.
- Ne pas utiliser dans des zones excessivement humides.
- Gardez le purificateur d'air éloigné des sources de chaleur telles que les fourneaux de cuisine, les fours ou les radiateurs.
- Ne pas utiliser là où des gaz combustibles, des vapeurs, des poussières métalliques, des produits en aérosol (la pulvérisation) ou des fumées d'huile industrielle sont présents.
- Gardez 5 pieds / 1,5 mètres de l'endroit où l'oxygène est administré.
- Surveillez les enfants lorsqu'ils sont à proximité du purificateur d'air.
- Ne placez rien dans les ouvertures du purificateur d'air.
- Ne placez pas d'objets lourds sur le purificateur d'air.
- Gardez l'intérieur du purificateur d'air sec. Pour éviter l'accumulation d'humidité, évitez de placer dans des pièces avec des changements de température importants ou sous des climatiseurs.
- Débranchez toujours le purificateur d'air avant l'entretien (comme lors du changement de filtre).
- N'utilisez pas le purificateur d'air s'il est endommagé ou ne fonctionne pas correctement, ou si le cordon d'alimentation ou la fiche est endommagé. Ne vous réparez pas vous-même. Contactez immédiatement le service client
- AVERTISSEMENT : Pour réduire le risque d'incendie ou de choc électrique, n'utilisez pas ce purificateur d'air en combinaison avec des commandes tierces (telles qu'un gradateur).
- Pas pour un usage commercial. Usage domestique uniquement.

2. Le cordon d'alimentation & la fiche

- Placez le purificateur d'air près de la prise électrique dans laquelle il est branché.
- Ne placez jamais le cordon d'alimentation à proximité de sources de chaleur.
- Ne couvrez pas le cordon d'alimentation avec un tapis, une moquette ou un autre revêtement. Ne placez pas le cordon sous des meubles ou des appareils électroménagers.
- Gardez le cordon d'alimentation hors des zones où les gens marchent fréquemment. Placez le cordon là où il ne risque pas de trébucher.
- Ce purificateur d'air a une fiche polarisée (une broche est plus large que l'autre), qui s'insère dans une prise polarisée dans une seule orientation. Il s'agit d'une fonction de sécurité pour réduire le risque de choc électrique. Si la fiche ne rentre pas, inversez la fiche dans le bon

sens. S'il ne rentre toujours pas, ne contournez pas cette fonction de sécurité et essayez de forcer la fiche dans la prise. Au lieu de cela, ne l'utilisez pas avec la prise.

- Ce purificateur d'air utilise des prises standard US 120V, 60Hz. Si vous utilisez en dehors des États-Unis, vérifiez la compatibilité.

Package Includes

Item	Quantity
Air Purifier	1
3-Stage Filter (Pre-Installed)	1
User Manual	1
Quick Start Guide	1

Specifications

Power Supply	AC 120V, 60Hz
Rated Power	36W
Effective Range	258 ft² / 24 m² Note: Effective for larger rooms, but purification will take longer. Ideal Room Size is based on 5 complete air changes per hour (ACH).
CADR	120 CFM / 204m³/h
Noise Level	24–48dB
Air Purifier Dimensions	8.3 x 8.3 x 13.6 in /21 x 21 x 34.5 cm
Air Purifier Weight	6.6 lb / 3 kg
Operating Conditions	Temperature: 14°F to104°F / -10°C to 40°C
	Humidity: < 85% RH

Getting To Know Your Air Purifier

a. Fan Speed Indicator
b. Fan Speed Button
c. On/Off Button
d. Sleep Mode Button
e. Timer Button
f. Timer Indicator
g. Wi-Fi Indicator
h. Night Light Button
i. Lock Button
j. Filter Change Indicator & Button
k. Air Outlet
l. Housing
m. Air Inlet
n. Power Cord
o. Filter Cover
p. True HEPA Filter
q. Screw Nut

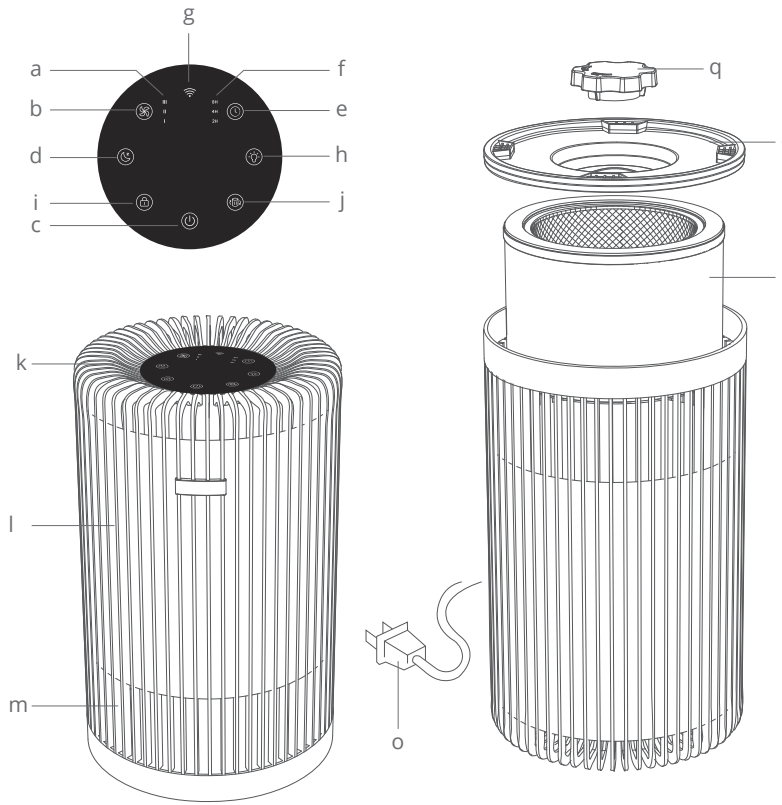

Getting Started

1. Flip the air purifier over. Twist the screw nut counter clockwise and remove bottom filter cover.

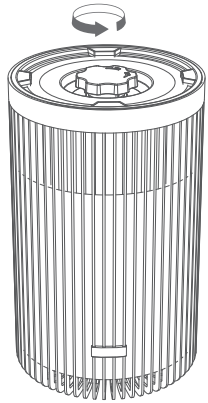

2. Remove the filter from its plastic packaging and place the filter back into the air purifier.

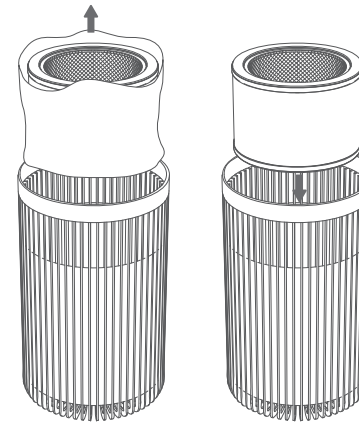

3. Reattach the filter cover and twist clockwise screw nut to lock.

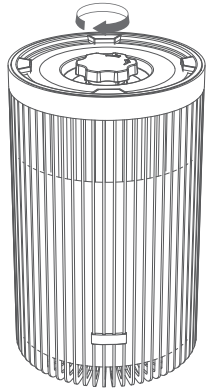

4. Place the air purifier on a flat, stable surface with the display facing up. Allow at least 15 inches / 38cm of clearance on all sides of the air purifier. Keep away from anything that would block airflow, such as curtains.

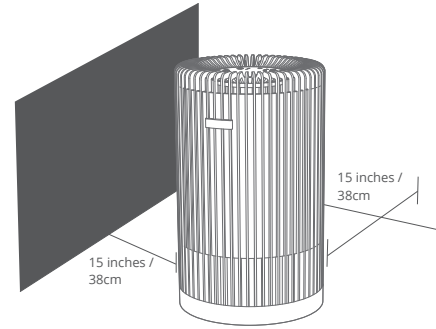

Using Your Air Purifier

Using Govee Home App allows access to additional functions and features, along with the ability to control the air purifier remotely.

1. Functions & Controls

Power On & Off

❶ Plug in the power cord, and all lights will flash once. The air purifier will then enter stand-by status automatically.

❷ Tap On/Off Button to turn the air purifier On/Off. The fan will start on level I once turned On.

Note: Ensure the outlet's voltage is compatible with Air Purifier or else it may cause damage.

Change Fan Speed

Tap Fan Speed Button to change fan speeds between I, II, and III.

Note:

- The fan speed indicators are not buttons and cannot be used to change fan speed.
- The fan speed indicators will light up when active.
- Fan speed III is the loudest, but cleans the air quickest.
- For best results, or to address a specific air quality issue such as smoke, run the air purifier at high speed (fan speed III) for 15–20 minutes before using a lower speed.
- To effectively clean air, keep windows and doors closed while the air purifier is on.

Timer

❶ Tap Timer Button repeatedly to select a time.

❷ To cancel a timer, tap Timer Button until all timer indicators are off.

Note:

- The fan speed indicators are not buttons and cannot be used to change fan speed.
- The fan speed indicators will light up when active.
- Fan speed III is the loudest, but cleans the air quickest.
- For best results, or to address a specific air quality issue such as smoke, run the air purifier at high speed (fan speed III) for 15–20 minutes before using a lower speed.
- To effectively clean air, keep windows and doors closed while the air purifier is on.

Sleep Mode

❶ Tap Sleep Mode Button once to turn Sleep Mode on.

❷ Tap Sleep Mode Button again to exit Sleep Mode.

Note:

- Sleep Mode dims all icons to very low brightness and operates quietly by using a fan speed lower than fan speed I.
- Tapping Fan Speed Button will exit Sleep Mode.
- You can still adjust the night light and timer while the air purifier is in Sleep Mode.

Night Light

❶ Tap once to turn on the night light.
❷ Tap again to turn off the night light.

Note:

- You can turn the night light on and off using the Night Light button, even when the air purifier is turned off (as long as it is still plugged in to power).
- You can also adjust night light brightness using Govee Home App. The purifier unit will remember this set brightness.

Lock

Press and hold Lock Button for 3 seconds on lock/unlock the display.

Note:

- Locking the display prevents settings from being accidentally changed. When locked, the display will not respond to being tapped.
- While the display is locked, Lock Button will light up. If other buttons are tapped, Lock Button will flash 3 times.
- The air purifier can still be controlled using Govee Home App when the display is locked. To operate the display's buttons, you must unlock the display.

Memory Function

Even while turned off or unplugged, the air purifier will remember its previous fan speed, sleep mode, and night light brightness settings.

Note:

The memory function does not work with the timer, lock display feature, or night light settings (except for the light brightness setting).

Filter Change Indicator & Button

When the lifetime of the filter reached, the filter exchange indicator light will be lighted up with red. After replace with the new filter, press and hold the button for 3s. When the indicator light flashes 3 times, means the reset completed.

Note:

- After the filter reset, the filter usage time will be recalculated.
- You can also reset the filter change indicator by 3s long-press, even the indicator light is not on.

2. LED Indicators

Working Status	Indicator Status
Power On	Power Indicator lights up white
Fan Speeds I, II, and III	Indicators separately light up blue
Timers 2h, 4h, and 8h	Indicators separately light up blue
Filter Change Needed	Filter Change Indicator lights up red
Locked	Lock Indicator lights up white
Sleep Mode On	Sleep Mode Indicator lights up white
Night Light On	Night Light Indicator lights up white
Display Off	All indicator lights will dim
Ready for Wi-Fi Connection	Wi-Fi Indicator light slowly flashes blue
Wi-Fi Connecting	Wi-Fi Indicator light quickly flashes blue
Wi-Fi Connected	Wi-Fi Indicator light shows solid blue

Pairing Your Air Purifier With Govee Home App

Due to ongoing updates and improvements, Govee Home app's interface and features may be slightly different than those shown in the manual. In case of differences, follow the in-app instructions.

Pairing Steps

1. To download the Govee Home App, scan the QR code or search "GOVEE" in the Apple App Store® (iOS devices) or Google Play Store (Android devices).

Govee Home App

Download on the App Store

GET IT ON Google Play

2. Turn on your smartphone's Bluetooth.
3. Open the Govee Home App, tap the "+" icon in the top right corner, and search "H7121".
4. Tap the device icon and follow the on-screen instructions to complete pairing.

Note:

- You can use the Govee Home App to connect your purifier to Amazon Alexa or Google Assistant. Follow the in-app instructions to connect Govee Home App to your voice assistant.
- The Govee Home App is continually updated and App features will expand.

About The Filters

The air purifier uses a 3-stage filtration system to purify air.

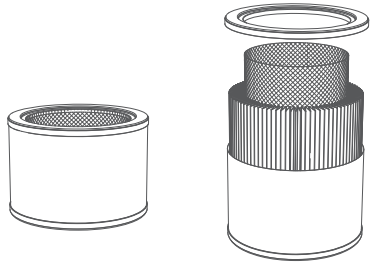

Pre-Filter

- Captures large particles such as dust, lint, fibers, hair, and pet fur.
- Maximizes the filter's life by protecting it from large debris.

H13 True HEPA Filter

- Captures at least 99.97% of airborne particles 0.3 microns (μm) in size.
- Filters small particles such as fine dust, smoke particles, and allergens such as pollen and pet dander.

Activated Carbon Filter

- Physically adsorbs smoke, odors, and fumes.
- Filters compounds such as formaldehyde, benzene, ammonia, hydrogen sulfide and volatile organic compounds (VOCs).

Clean Air Delivery Rate

- This air purifier has a Clean Air Delivery Rate (CADR) of 120 cubic feet per minute (CFM), or 204m³/h.
- CADR measures the efficiency of an air purifier by indicating the volume of clean air it purifies per minute. This is based on removal of dust, pollen, and smoke, which are the 3 most common indoor air pollutants. The higher the CADR, the more particles the air purifier will remove and the larger the area it can clean. The rating is measured at the air purifier's highest speed.

Air Change Per Hour

- The Air Change Rate is how many times all of the air in a room can be purified (or "changed") by the air purifier in 1 hour. Air changes per hour are calculated on the recommended room size, assuming 8 ft / 2.4 m ceilings.

- For smaller rooms, the air change per hour will increase. This air purifier has an air change per hour of 5, which means it can change air 5 times per hour at the max speed in a single, closed room up to 183 ft^2 / 17m^2. The air purifier is effective for larger rooms, but air purification will take longer, with fewer air changes per hour.
  Note: To effectively clean air, keep windows and doors closed while the air purifier is on.

Humidity

Moisture may damage the filters. This air purifier should be used in an area with a humidity level below 85% RH. If the air purifier is used in excessively humid areas, the surface of the filter may become moldy.

Essential Oils

- Do not add essential oils to the air purifier or filter. The filter can be damaged by the oil and will eventually release an unpleasant smell.
- Do not use diffusers near the air purifier.

Care & Maintenance

Cleaning Air Purifier

Do not clean the air purifier with abrasive chemicals or flammable cleaning agents.

Cleaning Steps

1. Unplug before cleaning.
2. Wipe the outside of the air purifier with a soft, dry cloth. If necessary, wipe the housing with a damp cloth, then immediately dry.
3. Vacuum the inside of the air purifier.

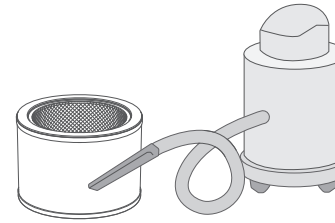

Cleaning The Filter

Do not clean the filter with water or other liquids.
The outer pre-filter should be cleaned every 2–4 weeks to increase efficiency and extend the life of the filter. Clean the pre-filter using a soft brush or vacuum hose to remove hair, dust, and large particles.

Filter	When to Clean	How to Clean	When to Replace
Pre-Filter	Every 2–4 weeks	Use a soft brush or vacuum hose	6 - 8 months
H13 True HEPA Filter	Do not clean	Do not clean	6 - 8 months
Activated Carbon Filter	Do not clean	Do not clean	6 - 8 months

Replacing the Filter

The filter should be replaced every 6–8 months. You may need to replace your filter sooner or later depending on how often you use your air purifier.

Replacing Steps

1. Unplug the air purifier. Flip the air purifier over and remove the bottom filter cover.
2. Remove the old filter.
3. Clean out any remaining dust or hair inside the air purifier using a vacuum hose. Do not use water or liquids to clean the air purifier.
4. Unwrap the new filter and place it into the housing
5. Reattach the filter cover and twist clockwise screw nut to lock. Plug in the air purifier.
6. Reset the Filter Change Indicator.

Note:

- To maintain the performance of your air purifier, only use official Govee filters. To buy replacement filters, visit Govee's online store.
- Remember to reset the Filter Change Indicator after changing the filter.

Filter Replacement Time Period

Using your air purifier in an environment with relatively high pollution may mean you will need to replace the filter more often, even if the Filter Change Indicator is off.
You may need to replace your filter if you notice any of the following:

- Increased noise when the air purifier is on
- Decreased airflow
- Unusual odors
- A visibly clogged filter

Resetting The Filter Change Indicator

When the Filter Change Indicator light red, it prompts to reset the filter service life.

Filter Change Indicator

- Press and hold Filter Change Button for 3 seconds. Filter Change Indicator will flash 3 times and then turn off once successfully reset.
- Filter Change Indicator will light up as a reminder to replace the filter. Depending on how often you use the air purifier, the indicator should turn on within 6–8 months. You may not need to replace your filter immediately, but you should check the filter when Filter Change Indicator turns on.
- If the filter was recently changed before Filter Change Indicator light up, reset the countdown again by pressing and holding Filter Change Indicator for 3 seconds.

Storage

If not using the air purifier for an extended period of time, wrap both the air purifier and the filter in plastic packaging and store in a dry place to avoid moisture damage.

Troubleshooting

The troubleshooting section below is for solving frequently asked questions for the purifier unit. If your problem persists, please contact customer support.

For Air Purifier

Problem	Possible Solution
Air purifier will not turn on or respond to touch controls.	Plug in the air purifier.
	Check to see if the power cord is damaged. If so, stop using the air purifier and contact Customer Support.
	Plug the air purifier into a different electrical outlet.
	The air purifier may be malfunctioning. Contact Customer Support.
	Make sure the filter's plastic packaging is removed and is the filter is properly installed.
Airflow is significantly reduced.	Tap Fan Speed Button to change the fan speed.
	Make sure there are at least 15 inches / 38cm of clearance on all sides of the air purifier.
	The pre-filter may be clogged by large particles, such as hair or lint, blocking air flow. Clean the pre-filter.
	Replace with a new filter.
Air purifier makes an unusual noise while the fan is on.	Make sure the filter is properly installed with its plastic packaging removed.
	Make sure the air purifier is operating on a hard, flat, level surface.
	Replace the filter .
	The air purifier may be damaged, or a foreign object may be inside. Stop using the air purifier and contact Customer Support. Do not try to repair the air purifier yourself.
Strange smell is coming from the purifier.	Clean the filter or replace with a new filter if necessary.
	Make sure not to use your air purifier in an area with high humidity or while diffusing essential oils.

Poor air purification quality.	Tap Fan Speed Button to increase the fan speed.
	Make sure no objects are blocking the sides or top of the air purifier (the inlet or outlet).
	Make sure the filter is removed from its packaging and is properly installed.
	Close doors and windows while using the air purifier.
	If the room is larger than 258 ft² / 24 m², air purification will take longer. The air purifier may not be as effective in significantly larger rooms.
	Replace with a new filter.
Filter Change Indicator is still on after replacing with a new filter.	Reset the Filter Change Indicator.
Filter Change Indicator has not turned on within 8 months.	Filter Change Indicator is a reminder for you to check the filter and will light up based on how often the air purifier has been used. If you don't use your air purifier often, Filter Change Indicator will not turn on as soon.
Filter Change Indicator turned on within 6 months.	Filter Change Indicator is a reminder for you to check the filter and will light up based on how often the air purifier has been used. If you run your air purifier frequently, Filter Change Indicator will turn on sooner.

For App & Connectivity

1. Cannot connect to the Govee Home App.

- Make sure the Bluetooth of your smartphone is enabled and your smartphone is not connected with other Bluetooth air purifiers.
- Enable the smartphone's Location Services.
- Try connecting with another smartphone.
- Make sure your App is the latest version.
- Make sure you are connected to the 2.4GHz network, and confirm the network is working correctly.
- Make sure the Wi-Fi password you entered is correct.
- Shorten the distance between the air purifier, Wi-Fi router, and the smartphone.
- Make sure your air purifier and the Wi-Fi router are located away from appliances that produce electromagnetic radiation (e.g. microwave ovens, refrigerators, etc.).

FCC Statement

This device complies with Part 15 of the FCC Rules. Operation is subject to the following two conditions:

(1) this device may not cause harmful interference, and

(2) this device must accept any interference received, including interference that may cause undesired operation.

Warning: Any Changes or modifications not expressly approved by the party responsible for compliance could void the user's authority to operate the equipment.

Note: This equipment has been tested and found to comply with the limits for a Class B digital device, pursuant to Part 15 of the FCC Rules. These limits are designed to provide reasonable protection against harmful interference in a residential installation.

This equipment generates uses and can radiate radio frequency energy and, if not installed and used in accordance with the instructions, may cause harmful interference to radio communications. However, there is no guarantee that interference will not occur in a particular installation. If this equipment does cause harmful interference to radio or television reception, which can be determined by turning the equipment off and on, the user is encouraged to try to correct the interference by one or more of the following measures:

(1) Reorient or relocate the receiving antenna.

(2) Increase the separation between the equipment and receiver.

(3) Connect the equipment into an outlet on a circuit different from that to which the receiver is connected.

(4) Consult the dealer or an experienced radio/TV technician for help.

FCC Radio Frequency Exposure Statement

The antenna(s) used for this transmitter must be installed to provide a separation distance of at least 20 cm from all persons and must not be collocated or operating in conjunction with any other antenna or transmitter, End-Users must be provided with transmitter operation conditions for satisfying RF exposure compliance.

IC Statement

This device complies with Industry Canada licence-exempt RSS standard(s). Operation is subject to the following two conditions:
(1) this device may not cause interference, and
(2) this device must accept any interference, including interference that may cause undesired operation of the device.

Le présent appareil est conforme aux CNR d'Industrie Canada applicables aux appareils radio exempts de licence. L'exploitation est autorisée aux deux conditions suivantes:
(1) l'appareil nedoit pas produire de brouillage, et
(2) l'utilisateur de l'appareil doit accepter tout brouillage radioélectrique subi, même si le brouillage est susceptible d'en compromettre le fonctionnement.

This Class B digital apparatus complies with Canadian ICES-003.
Cet appareil numérique de la classe B est conforme à la norme NMB-003 du Canada.
IC RF Statement:
When using the product, maintain a distance of 20cm from the body to ensure compliance with RF exposure requirements.
Lors de l'utilisation du produit, maintenez une distance de 20 cm du corps afin de vous conformer aux exigences en matière d'exposition RF.