1. Overview

The EL.MT7603UN-WFT is a highly integrated Wi-Fi single chip which supports 300 Mbps PHY rate. It fully complies with IEEE 802.11n and IEEE 802.11 b/g standards, offering feature-rich wireless connectivity at high standards, and delivering reliable, cost-effective throughput from an extended distance. Optimized RF architecture and baseband algorithms provide superb performance and low power consumption. Intelligent MAC design deploys a high efficient DMA engine and hardware dataprocessing accelerators which offloads the host processor.

The EL.MT7603UN-WFT is designed to support standard based features in the areas of security, quality of service and international regulations, giving end users the greatest performance any time and in any circumstance.

2. Features

- IEEE 802.11 b/g/n compliant
- 2T2R mode with support of 300Mbps PHY rate
- Greenfield, mixed mode, legacy modes support
- Support MCC(multi channel concurrent)
- Frame aggregation
- WiFi Positioning(802.11v/ TOD)
- BW5/10 narrow band(Rx +2.5dBm), extending coverage
- WoWLAN via GPIO(client mode), Support Host Sleep(AP mode)
- Airtime Fairness(QoS)
- Meet ETSI EN 300 328 V1.8.1 test plan(mandatory for EU in 2014/E)
- Integrated LNA, PA, and T/R switch
- IEEE 802.11 d/h/k support
- Security support for WFA WPA/WPA2 personal, WPS2.0, WAPI
- Supports 802.11w protected management frames
- QoS support of WFA WMM, WMM PS
- Supports Wi-Fi Direct
- Per packet transmit power control
- Wake on WLAN

3. Block Diagram

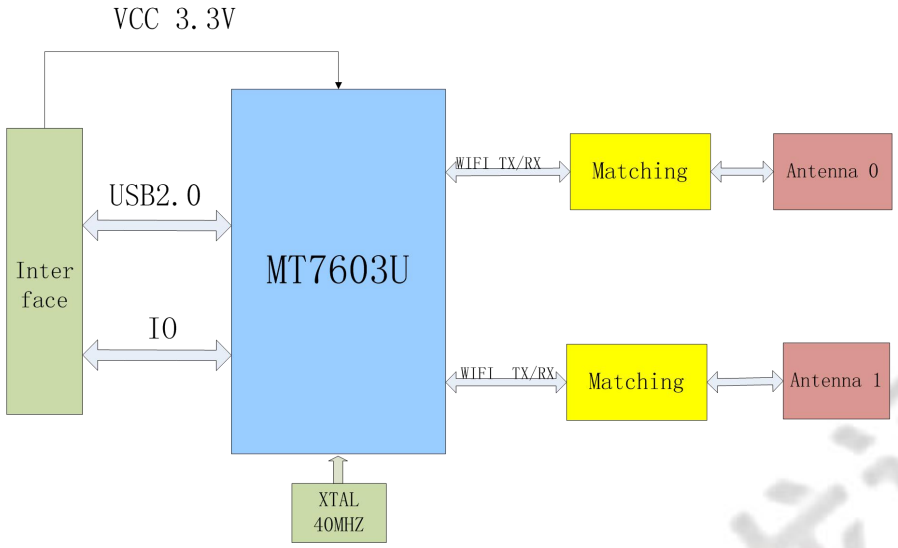

4. Reset timing spec

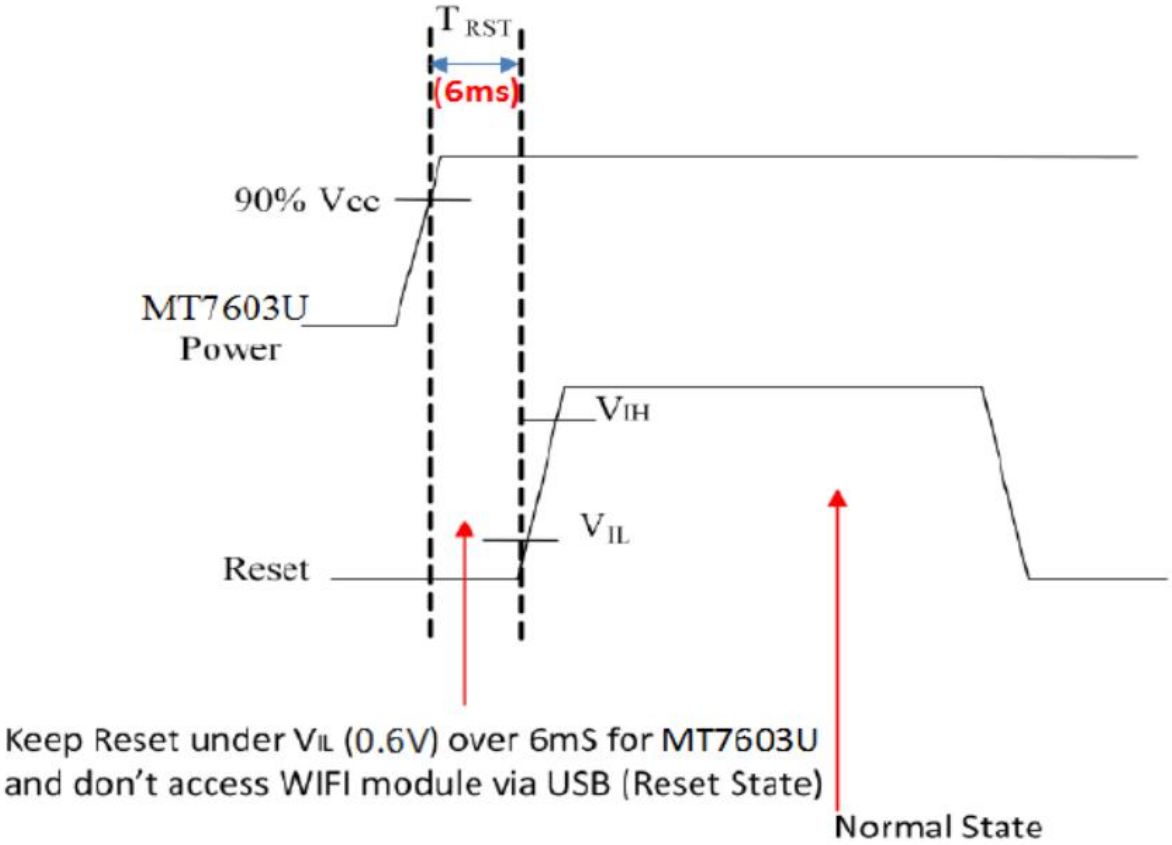

5. DC Characteristics

symbol	Parameter	Minimum	Typical	Maximum	Units
V33USB	3.3Vsupply voltage	3.0	3.3	3.6	V
VD12DE	1.2Vsupply voltage	1.10	1.2	1.32	V
VD16DE	1.6Vsupply voltage	1.50	1.6	1.66	V
IDD33	3.3V rating current	--	--	600	mA

6. General Specification

Model	EL.MT7603UN-WFT
Product Name	WLAN 11n USB 2T2R module
Major Chipset	MT7603UN
Standard	802.11b/g/n
PCBA Dimension	LxWxH：30.0 x 25.0 x 6.0mm ±0.2mm
Modulation Method	802.11b:CCK,DQPSK,DBPSK 802.11g:64QAM,16QAM,QPSK,BPSK 802.11n:BPSK,QPSK,16QAM,64QAM
Frequency Band	2412-2462MHz for 802.11b/g/11n(HT20); 2422-2452MHz for 802.11n(HT40);
Channels	CH11
Max. Frequency Deviation	802.11b 1Mbps:FL-2402.55MHz,FH-2481.70MHz 802.11g 6Mbps:FL-2402.35MHz,FH-2482.20MHz 802.11b 6.5Mbps:FL-2402.00MHz,FH-2482.25MHz 802.11b 13Mbps:FL-2403.20MHz,FH-2480.60MHz
Test Tone deviation	+/-75kHz
Interface	USB 2.0
Ambient Operating Temperature	-10~+70° C
Storage Temperature	-40~+90 °C
Humidity	5 to 90 % maximum (non-condensing)

7. Electrical Characteristics

Feature	Description
WLAN Standard	IEEE 802.11b/g/n WiFi compliant
Frequency Range	2.400 GHz ~ 2.497 GHz (2.4 GHz ISM Band)
Number of Channels	2.4GHz：Ch1 ~ Ch14
Modulation	802.11b : DQPSK, DBPSK, CCK 802.11 g/n : OFDM /64-QAM,16-QAM, QPSK, BPSK
Output Power	802.11b /1Mbps : 15-20dBm @ EVM ≤ -10dB
	802.11b /11Mbps : 17dBm ± 2 dB @ EVM ≤ -15dB
	802.11g /6Mbps : 13 -20dBm @ EVM ≤ -5dB
	802.11g /54Mbps : 15 dBm ± 2 dB @ EVM ≤ -25dB
	802.11n /MCS0 HT20 : 12-20 dBm @ EVM ≤ -5dB
	802.11n /MCS7 HT20 : 14 dBm ± 2 dB @ EVM ≤ -28dB
	802.11n /MCS0 HT40 : 12-20dBm @ EVM ≤ -5dB
	802.11n /MCS7 HT40 : 13 dBm ± 2 dB @ EVM ≤ -28dB
Receive Sensitivity (11b,20MHz) @8% PER	- 1Mbps PER @ -93 dBm, typical
	- 2Mbps PER @ -91 dBm, typical
	- 5.5Mbps PER @ -87 dBm, typical
	- 11Mbps PER @ -85 dBm, typical
Receive Sensitivity (11g,20MHz) @10% PER	- 6Mbps PER @ -90 dBm, typical
	- 9Mbps PER @ -89 dBm, typical
	- 12Mbps PER @ -88 dBm, typical
	- 18Mbps PER @ -85 dBm, typical
	- 24Mbps PER @ -82 dBm, typical
	- 36Mbps PER @ -79 dBm, typical
	- 48Mbps PER @ -74 dBm, typical
	- 54Mbps PER @ -72 dBm, typical
Receive Sensitivity (11n,20MHz) @10% PER	- MCS=0 PER @ -90 dBm, typical
	- MCS=1 PER @ -87 dBm, typical
	- MCS=2 PER @ -85 dBm, typical
	- MCS=3 PER @ -81 dBm, typical
	- MCS=4 PER @ -78 dBm, typical
	- MCS=5 PER @ -73 dBm, typical
	- MCS=6 PER @ -72 dBm, typical
	- MCS=7 PER @ -70 dBm, typical
Receive	- MCS=0 PER @ -87 dBm, typical

	- MCS=1	PER @ -84 dBm, typical
	- MCS=2	PER @ -82 dBm, typical
	- MCS=3	PER @ -79 dBm, typical
	- MCS=4	PER @ -75 dBm, typical
	- MCS=5	PER @ -71 dBm, typical
	- MCS=6	PER @ -69 dBm, typical
	- MCS=7	PER @ -68 dBm, typical
Maximum Input Level	802.11b : -10 dBm	
	802.11g/n : -20 dBm	

8. Pin Description and PCB size

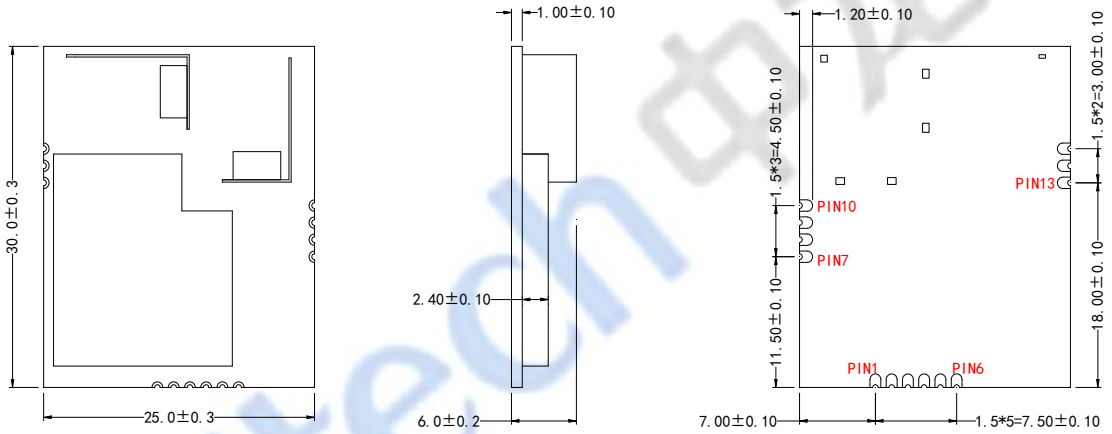

Main View Side View Back View

NO.	Symbol	Description
1	GND	Ground connections
2	DP	USB positive differential data lines
3	DM	USB negative differential data lines
4	VCC	Power supply 3.3V
5	RESET	System reset MT7603UN,low active(模组 10k 上拉)
6	WOW	Wake up system via wifi,low active(模组 10k 上拉)
7	GND	Ground connections

8	NC	
9	NC	
10	GND	Ground connections
11	GND	Ground connections
12	NC	
13	GND	Ground connections

9. Modular photo

对应物料	型号规格	供应厂家
Crystal	40Mhz	JWT，FK
IC	MT7603U	MTK
PCBA VER	F97603U	A,0

PCBA physical photo

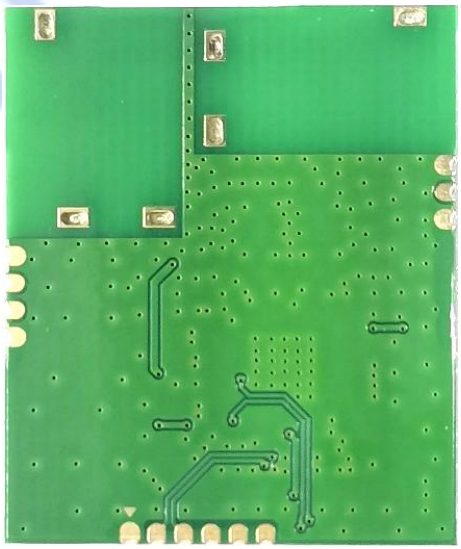

TOP	BOTTOM
LxWxH：30.0 x 25.0 x 6.0mm ±0.3mm	

注：2219.A 为 PCB 周期丝印，因不同 PCB 供应商标准存在差异，所以字符会存在一定的区别

10. Package Size

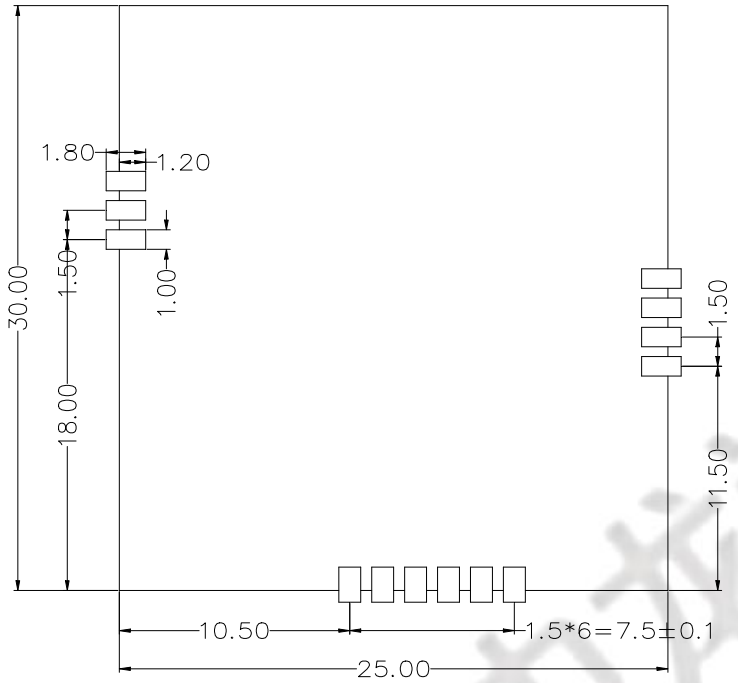

11. Recommended Reflow Profile

Referred PC/JEDEC standard.
Peak Temperature : <250°C
Number of Times : 2 times

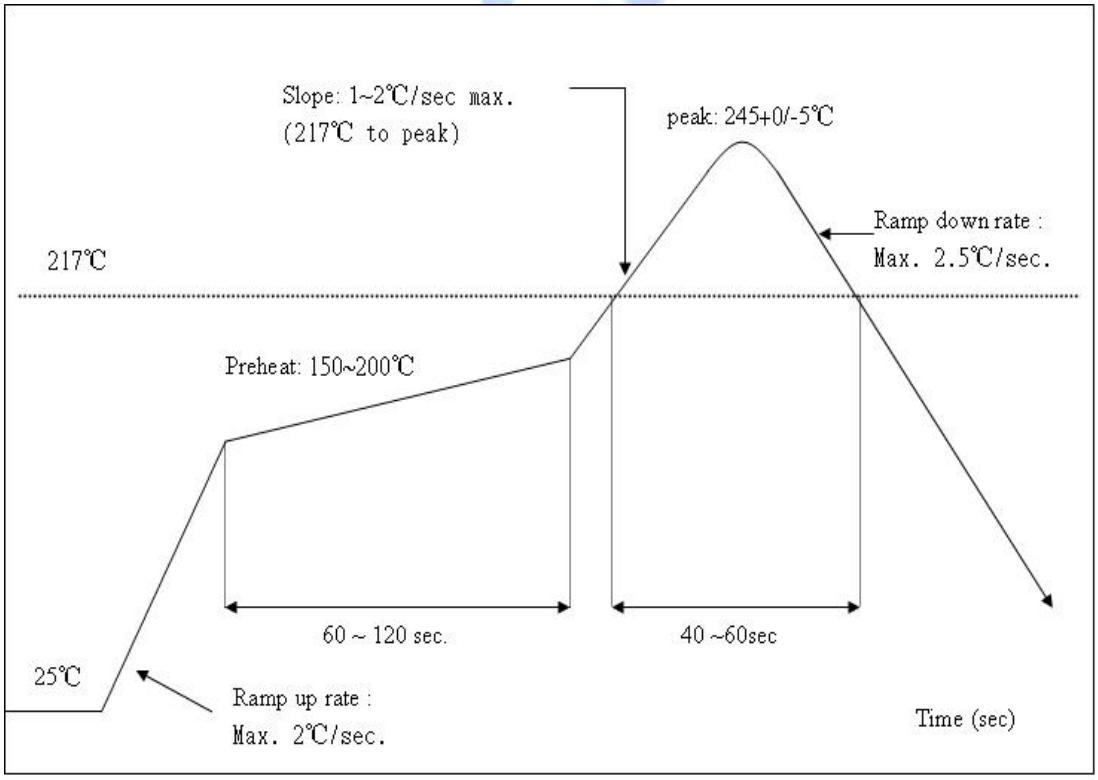

12. Package

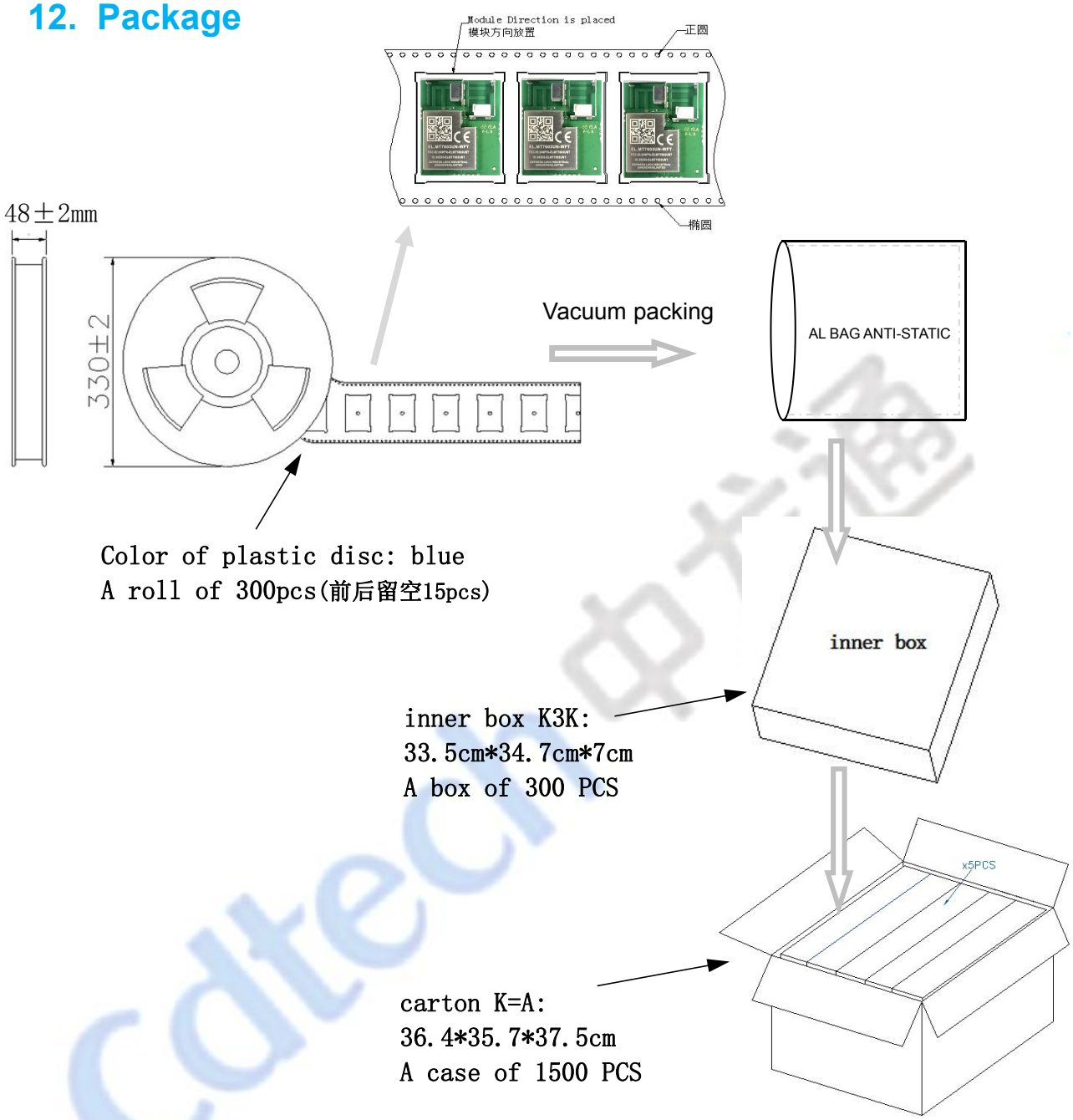

ESD CAUTION

The EL.MT7603UN-WFT is ESD (electrostatic discharge) sensitive device and may be damaged with ESD or spike voltage. Although EL.MT7603UN-WFT is with built-in ESD protection circuitry, please handle with care to avoid the permanent malfunction or the performance degradation.

OEM integration instructions:
This device is intended only for OEM integrators under the following conditions:
The transmitter module may not be co-located with any other transmitter or antenna. The module shall be only used with the external antenna(s) that has been originally tested and certified with this module.
As long as the conditions above are met, further transmitter test will not be required. However, the OEM integrator is still responsible for testing their end-product for any additional compliance requirements required with this module installed (for example, digital device emissions, PC peripheral requirements, etc.).
Validity of using the module certification:
In the event that these conditions cannot be met (for example certain laptop configurations or co-location with another transmitter), then the FCC authorization for this module in combination with the host equipment is no longer considered valid and the FCC ID of the module cannot be used on the final product. In these circumstances, the OEM integrator will be responsible for re-evaluating the end product (including the transmitter) and obtaining a separate FCC authorization.
End product labeling:
The final end product must be labeled in a visible area with the following: "Contains Transmitter Module FCC ID: 2AWY6-ELMT7603UNT".
Information that must be placed in the end user manual:
The OEM integrator has to be aware not to provide information to the end user regarding how to install or remove this RF module in the user's manual of the end product which integrates this module. The end user manual shall include all required regulatory information/warning as show in this manual.

Integration instructions for host product manufacturers according to KDB 996369 D03 OEM Manual v01
2.2 List of applicable FCCrules
FCC Part 15 Subpart C 15.247 & 15.207 & 15.209
2.3 Specific operational useconditions
The module WiFi Module is a module with WIFI 2.4G function.
Operation Frequency:2412~2462MHz
Type: FIPA Antenna
Gain: Ant1:1.2dBi;Ant2:1.76dBi
The module can be used for mobile or applications with the maximum Ant1:1.2dBi;Ant2:1.76dBi; The host manufacturer installing this module into their product must ensure that the final composit product complies with the FCC requirements by a technical assessment or evaluation to the FCC rules, including the transmitter operaition. The host manufacturer has to be aware not to provide information to the end user regarding how to install or remove this RF module in the user's manual of the end product which integrates this module. The end user manual shall include all required regulatory information/warning as show in this manual.
2.4 Limited module procedures
Not applicable. The module is a Single module and complies with the requirement of FCC Part 15.212.
2.5 Trace antennadesigns
Not applicable. The module has its own antenna, and doesn't need a host's printed board microstrip trace antenna etc.
2.6 RF exposureconsiderations
The module must be installed in the host equipment such that at least 20cm is maintained betweenthe antenna and users' body; and if RF exposure statement or module layout is changed, then the host product manufacturer required to take responsibility of the module through a change in FCC ID or new application. The FCC ID of the module cannot be used on the final product. In these circumstances, the host manufacturer will be responsible for re-evaluating the end product (including the transmitter) and obtaining a separate FCCauthorization

2.7 Antennas

Antenna Specification are as follows:

Type: FIPA Antenna

Gain: Ant1:1.2dBi;Ant2:1.76dBi

This device is intended only for host manufacturers under the following conditions: The transmitter module may not be co-located with any other transmitter or antenna;

The module shall be only used with the internal antenna(s) that has been originally tested and certified with this module.

The antenna must be either permanently attached or employ a 'unique' antenna coupler.

As long as the conditions above are met, further transmitter test will not be required. However, the host manufacturer is still responsible for testing their end-product for any additional compliance requirements required with this module installed (for example, digital device emissions, PC peripheral requirements, etc.).

2.8 Label and complianceinformation

Host product manufacturers need to provide a physical or e-label stating "Contains FCC ID: 2AWY6-ELMT7603UNT"with their finished product.

2.9 Information on test modes and additional testingrequirements

Data transfer module demo board can control the EUT work in RF test mode at specified test channel. Additional testing, Part 15 Subpart B disclaimer.

The module without unintentional-radiator digital circuit, so the module does not required an evaluation by FCC Part 15 Subpart B. The host should be evaluated by the FCC Subpart B.

2.10 Additional testing, Part 15 Subpart Bdisclaimer

The modular transmitter is only FCC authorized for FCC Part 15 Subpart C 15.247 & 15.207 & 15.209 and that the host product manufacturer is responsible for compliance to any other FCC rules that apply to the host not covered by the modular transmitter grant of certification. If the grantee markets their product as being Part 15 Subpart B compliant (when it also contains unintentional-radiator digital circuity), then the grantee shall provide a notice stating that the final host product still requires Part 15 Subpart B compliance testing with the modular transmitter installed.

FCC STATEMENT :

This device complies with part 15 of the FCC Rules. Operation is subject to the following two conditions: (1) this device may not cause harmful interference, and (2) this device must accept any interference received, including interference that may cause undesired operation.

Any changes or modifications not expressly approved by the party responsible for compliance could void the user's authority to operate the equipment.

NOTE: This equipment has been tested and found to comply with the limits for a Class B digital device, pursuant to Part 15 of the FCC Rules. These limits are designed to provide reasonable protection against harmful interference in a residential installation. This equipment generate, uses and can radiate radio frequency energy and, if not installed and used in accordance with the instructions, may cause harmful interference to radio communications. However, there is no guarantee that interference will not occur in a particular installation.

If this equipment does cause harmful interference to radio or television reception, which can be determined by turning the equipment off and on, the user is encouraged to try to correct the interference by one or more of the following measures:

-- Reorient or relocate the receiving antenna.

-- Increase the separation between the equipment and receiver.

-- Connect the equipment into an outlet on a circuit different from that to which the receiver is connected.

-- Consult the dealer or an experienced radio/TV technician for help.

This equipment complies with FCC radiation exposure limits set forth for an uncontrolled environment. This equipment should be installed and operated with minimum distance 20cm between the radiator & your body.

IC Caution:
This device contains licence-exempt transmitter(s)/receiver(s) that comply with Innovation, Science and Economic Development Canada’s licence-exempt RSS(s). Operation is subject to the following two conditions:
This device may not cause interference.
This device must accept any interference, including interference that may cause undesired operation of the device.

L’émetteur/récepteur exempt de licence contenu dans le présent appareil est conforme aux CNR d’Innovation, Sciences et Développement économique Canada applicables aux appareils radio exempts de licence. L’exploitation est autorisée aux deux conditions suivantes :
L’appareil ne doit pas produire de brouillage;
L’appareil doit accepter tout brouillage radioélectrique subi, même si le brouillage est susceptible d’en compromettre le fonctionnement.
Cet équipement est conforme aux limites d’exposition aux rayonnements de la FCC établies pour un environnement non contrôlé. Cet équipement doit être installé et utilisé avec une distance minimale de 20 cm entre le radiateur et votre corps.