TEST REPORT

Report No.:	BCTC2112101340-1E
Applicant:	Lunar Artefacts Ltd
Product Name:	THE PULSE VOLITARI
Model/Type reference:	LAPV-C-MK1
Tested Date:	2021-12-16 to 2022-01-11
Issued Date:	2022-01-12

Shenzhen BCTC Testing Co., Ltd.

FCC ID: 2AWYJ-LAPV-C-MK1

Product Name:	THE PULSE VOLITARI
Trademark:	Lunar Artefacts
Model/Type reference:	LAPV-C-MK1
Prepared For:	Lunar Artefacts Ltd
Address:	Lunar Artefacts, Third Floor, 38 Spital Square, London, E1 6DY, United Kingdom
Manufacturer:	ShenZhen Fang Xin Technology Co., Ltd.
Address:	Rm 503, 5F, Hengbo Innovation Science and Technology Park, No.33, Qingning Rd,Longhua St, Longhua Dist, Shenzhen, China
Prepared By:	Shenzhen BCTC Testing Co., Ltd.
Address:	1-2/F., Building B, Pengzhou Industrial Park, No.158, Fuyuan 1st Road, Tangwei, Fuhai Subdistrict, Bao'an District, Shenzhen, Guangdong, China
Sample Received Date:	2021-12-16
Sample tested Date:	2021-12-16 to 2022-01-11
Issue Date:	2022-01-12
Report No.:	BCTC2112101340-1E
Test Standards	FCC Part15.209 ANSI C63.10-2013
Test Results	PASS

Tested by:

Eric Yang/Project Handler

Approved by:

Zero Zhou/Reviewer

The test report is effective only with both signature and specialized stamp.This result(s) shown in this report refer only to the sample(s) tested. Without written approval of Shenzhen BCTC Testing Co., Ltd, this report can't be reproduced except in full.The tested sample(s) and the sample information are provided by the client.

Table Of Content

Test Report Declaration Page
1. Version 4
2. Test Summary 5
3. Measurement Uncertainty 6
4. Product Information And Test Setup 7
4.1 Product Information 7
4.2 Test Setup Configuration 7
4.3 Support Equipment 8
4.5 Test Mode 8
5. Test Facility And Test Instrument Used 9
5.1 Test Facility 9
5.2 Test Instrument Used 9
6. Conducted Emissions 11
6.1 Block Diagram Of Test Setup 11
6.2 Limit 11
6.3 Test procedure 11
6.4 EUT operating Conditions 11
6.5 Test Result 12
7. Radiated Emissions 14
7.1 Block Diagram Of Test Setup 14
7.2 Limit 15
7.3 Test procedure 15
7.4 Test Result 17
8. Bandwidth Test 20
8.1 Block Diagram Of Test Setup 20
8.2 Test Result 21
9. Antenna Requirements 22
10. EUT Photographs 23
11. EUT Test Setup Photographs 25

(Note: N/A Means Not Applicable)

1. Version

Report No.	Issue Date	Description	Approved
BCTC2112101340-1E	2022-01-12	Original	Valid

2. Test Summary

The Product has been tested according to the following specifications:

No.	Test Parameter	Clause No.	Results
1	Conducted Emission	15.207	PASS
2	Radiated Emission	15.209	PASS
3	20dB Bandwidth	15.215	PASS
4	Antenna Requirement	15.203	PASS

3. Measurement Uncertainty

Where relevant, the following measurement uncertainty levels have been estimated for tests performed on the Product as specified in CISPR 16-4-2. This uncertainty represents an expanded uncertainty expressed at approximately the 95% confidence level using a coverage factor of k=2.

No.	Item	Uncertainty
1	3m chamber Radiated spurious emission(30MHz-1GHz)	U=4.3dB
2	Conducted Emission (150kHz-30MHz)	U=3.2dB
3	humidity uncertainty	U=5.3%
4	Temperature uncertainty	U=0.59℃

4. Product Information And Test Setup

4.1 Product Information

Model/Type reference:	LAPV-C-MK1
Model differences:	N/A
Product Description:	THE PULSE VOLITARI
Operation Frequency:	115kHz-205kHz
Antenna installation:	loop coil antenna
Ratings:	Input: DC 5V/3A, 9V/3A, 12V/3A
	Output: 5W*2, 7.5W*2, 10W*2

4.2 Test Setup Configuration

See test photographs attached in *EUT TEST SETUP PHOTOGRAPHS* for the actual connections between Product and support equipment.

Conducted Emission/Radiated Spurious Emission

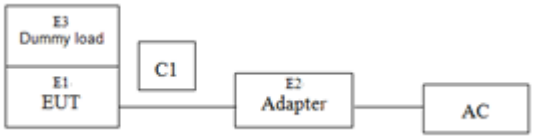

4.3 Support Equipment

No.	Device Type	Brand	Model	Series No.	Note
E-2	Adapter	N/A	FC69C	N/A	Auxiliary
E-3	Dummy load	N/A	DL01	N/A	Auxiliary

Item	Shielded Type	Ferrite Core	Length	Note
C-1	N/A	N/A	1M	DC cable unshielded

Notes:

1. All the equipment/cables were placed in the worst-case configuration to maximize the emission during the test.

2. Grounding was established in accordance with the manufacturer's requirements and conditions for the intended use.

4.5 Test Mode

To investigate the maximum EMI emission characteristics generates from EUT, the test system was pre-scanning tested base on the consideration of following EUT operation mode or test configuration mode which possible have effect on EMI emission level. Each of these EUT operation mode(s) or test configuration mode(s) mentioned above was evaluated respectively.

Test Mode 1	Wireless charger 10W+10W*
Test Mode 2	Wireless charger 7.5W
Test Mode 3	Wireless charger 5W

Note:
All test mode were tested and passed, Conducted Emissions, Radiated Emissions shows (*) is the worst case mode which were recorded in this report.

5. Test Facility And Test Instrument Used

5.1 Test Facility

All measurement facilities used to collect the measurement data are located at Shenzhen BCTC Testing Co., Ltd. Address:1-2/F., Building B, Pengzhou Industrial Park, No.158, Fuyuan 1st Road, Tangwei, Fuhai Subdistrict, Bao'an District, Shenzhen, Guangdong, China. The site and apparatus are constructed in conformance with the requirements of ANSI C63.4 and CISPR 16-1-1 other equivalent standards.
FCC Test Firm Registration Number: 712850
IC Registered No.: 23583

5.2 Test Instrument Used

Conducted Emissions Test					
Equipment	**Manufacturer**	**Model#**	**Serial#**	**Last Cal.**	**Next Cal.**
Receiver	R&S	ESR3	102075	May 28, 2021	May 27, 2022
LISN	R&S	ENV216	101375	May 28, 2021	May 27, 2022
ISN	HPX	ISN T800	S1509001	May 28, 2021	May 27, 2022
Software	Frad	EZ-EMC	EMC-CON 3A1	\	\
Attenuator	\	10dB DC-6GHz	1650	May 28, 2021	May 27, 2022

RF Conducted Test					
Equipment	**Manufacturer**	**Model#**	**Serial#**	**Last Cal.**	**Next Cal.**
Power Metter	Keysight	E4419	\	May 28, 2021	May 27, 2022
Power Sensor (AV)	Keysight	E9300A	\	May 28, 2021	May 27, 2022
Signal Analyzer 20kHz-26.5GHz	Keysight	N9020A	MY49100060	May 28, 2021	May 27, 2022
Spectrum Analyzer 9kHz-40GHz	R&S	FSP 40	\	May 28, 2021	May 27, 2022

Radiated Emissions Test (966 Chamber#01)					
Equipment	**Manufacturer**	**Model#**	**Serial#**	**Last Cal.**	**Next Cal.**
966 chamber	ChengYu	966 Room	966	Jun. 06. 2020	Jun. 05, 2023
Receiver	R&S	ESR3	102075	May 28, 2021	May 27, 2022
Receiver	R&S	ESRP	101154	May 28, 2021	May 27, 2022
Amplifier	SKET	LAPA_01G18G-45dB	\	May 28, 2021	May 27, 2022
Amplifier	Schwarzbeck	BBV9744	9744-0037	May 28, 2021	May 27, 2022
TRILOG Broadband Antenna	Schwarzbeck	VULB9163	942	Jun. 01, 2021	May 31, 2022
Horn Antenna	Schwarzbeck	BBHA9120D	1541	Jun. 02, 2021	Jun. 01, 2022
Horn Antenn (18GHz-40GHz)	Schwarzbeck	BBHA9170	00822	Jun. 15, 2021	Jun. 14, 2022
Amplifier (18GHz-40GHz)	MITEQ	TTA1840-35-HG	2034381	May 28, 2021	May 27, 2022
Loop Antenna (9KHz-30MHz)	Schwarzbeck	FMZB1519B	00014	Jun. 02, 2021	Jun. 01, 2022
RF cables1 (9kHz-30MHz)	Huber+Suhnar	9kHz-30MHz	B1702988-0008	May 28, 2021	May 27, 2022
RF cables2 (30MHz-1GHz)	Huber+Suhnar	30MHz-1GHz	1486150	May 28, 2021	May 27, 2022
RF cables3 (1GHz-40GHz)	Huber+Suhnar	1GHz-40GHz	1607106	May 28, 2021	May 27, 2022
Power Metter	Keysight	E4419	\	May 28, 2021	May 27, 2022
Power Sensor (AV)	Keysight	E9300A	\	May 28, 2021	May 27, 2022
Signal Analyzer 20kHz-26.5GHz	Keysight	N9020A	MY49100060	May 28, 2021	May 27, 2022
Spectrum Analyzer 9kHz-40GHz	R&S	FSP 40	\	May 28, 2021	May 27, 2022
Software	Frad	EZ-EMC	FA-03A2 RE	\	\

6. Conducted Emissions

6.1 Block Diagram Of Test Setup

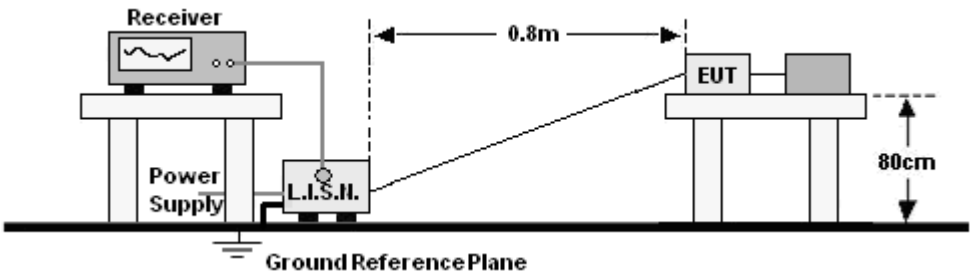

6.2 Limit

Frequency (MHz)	Limit (dBuV)	
	Quas-peak	Average
0.15 -0.5	66 - 56 *	56 - 46 *
0.50 -5.0	56.00	46.00
5.0 -30.0	60.00	50.00

Notes:
1. *Decreasing linearly with logarithm of frequency.
2. The lower limit shall apply at the transition frequencies.

6.3 Test procedure

Receiver Parameters	Setting
Attenuation	10 dB
Start Frequency	0.15 MHz
Stop Frequency	30 MHz
IF Bandwidth	9 kHz

a. The Product was placed on a nonconductive table 0.8 m above the horizontal ground reference plane, and 0.4 m from the vertical ground reference plane, and connected to the main through Line Impedance Stability Network (L.I.S.N).
b. The RBW of the receiver was set at 9 kHz in 150 kHz ~ 30MHz with Peak and AVG detector in Max Hold mode. Run the receiver's pre-scan to record the maximum disturbance generated from Product in all power lines in the full band.
c. For each frequency whose maximum record was higher or close to limit, measure its QP and AVG values and record.

6.4 EUT operating Conditions

The EUT was configured for testing in a typical fashion (as a customer would normally use it). The EUT has been programmed to continuously transmit during test. This operating condition was tested and used to collect the included data.

6.5 Test Result

Temperature:	26 ℃	Relative Humidity:	54%
Pressure:	101KPa	Phase :	L
Test Mode:	Mode 1	Test Voltage:	AC 120V/60Hz

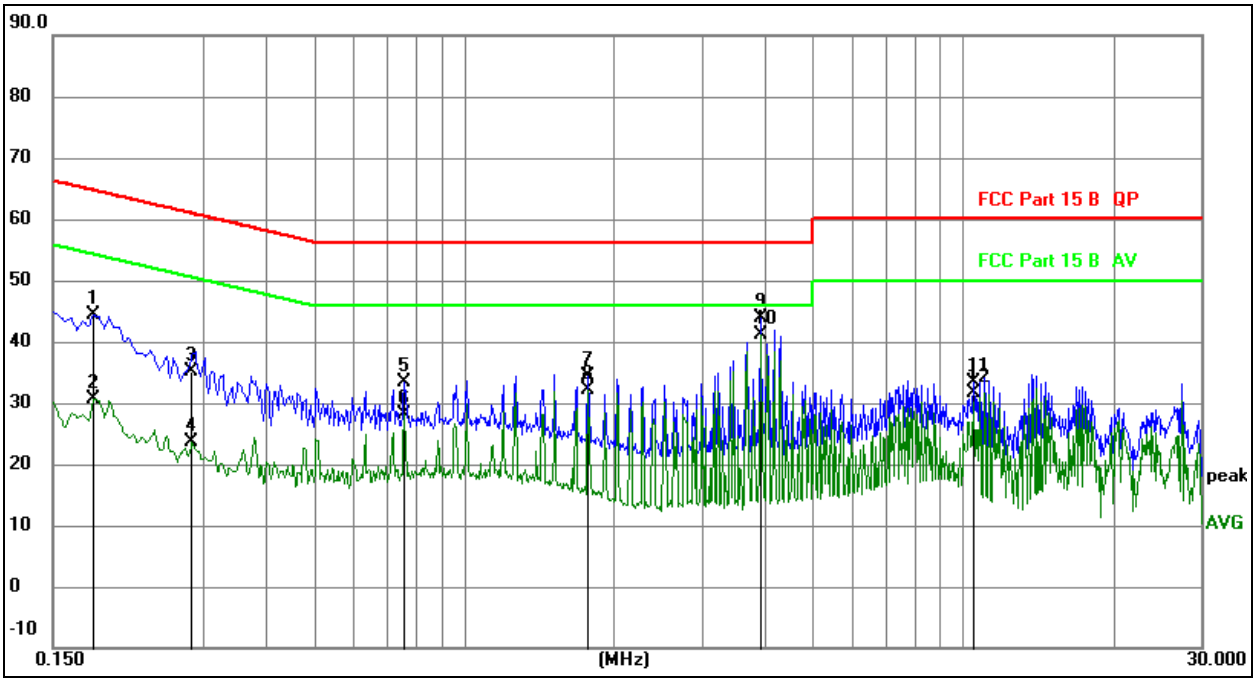

Remark:
1. All readings are Quasi-Peak and Average values.
2. Factor = Insertion Loss + Cable Loss.
3. Measurement = Reading Level + Correct Factor
4. Over = Measurement - Limit

No.	Mk.	Freq.	Reading Level	Correct Factor	Measure-ment	Limit	Over	
		MHz		dB	dBuV	dBuV	dB	Detector
1		0.1805	24.69	19.61	44.30	64.46	-20.16	QP
2		0.1805	11.11	19.61	30.72	54.46	-23.74	AVG
3		0.2847	15.48	19.61	35.09	60.68	-25.59	QP
4		0.2847	4.00	19.61	23.61	50.68	-27.07	AVG
5		0.7589	13.81	19.62	33.43	56.00	-22.57	QP
6		0.7589	8.42	19.62	28.04	46.00	-17.96	AVG
7		1.7716	14.69	19.63	34.32	56.00	-21.68	QP
8		1.7716	12.39	19.63	32.02	46.00	-13.98	AVG
9		3.9221	24.17	19.68	43.85	56.00	-12.15	QP
10	*	3.9221	21.55	19.68	41.23	46.00	-4.77	AVG
11		10.5079	13.57	19.80	33.37	60.00	-26.63	QP
12		10.5079	11.79	19.80	31.59	50.00	-18.41	AVG

Temperature:	26 ℃	Relative Humidity:	54%
Pressure:	101KPa	Phase :	N
Test Mode:	Mode 1	Test Voltage:	AC 120V/60Hz

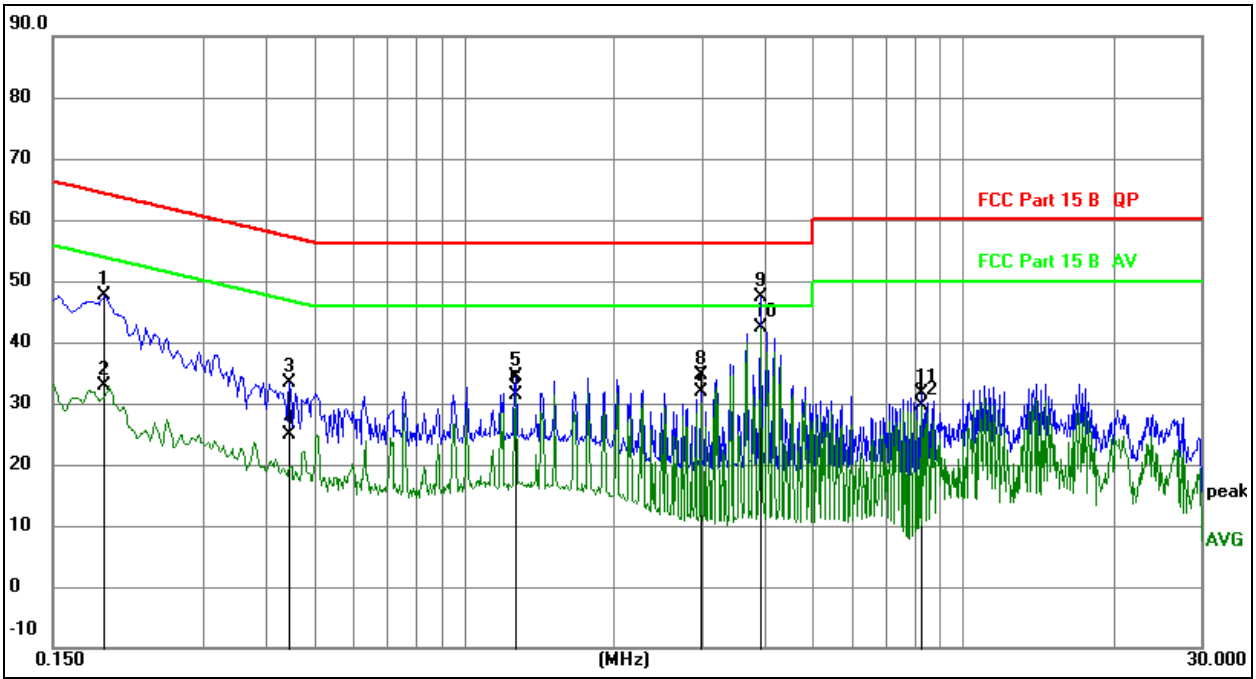

Remark:
1. All readings are Quasi-Peak and Average values.
2. Factor = Insertion Loss + Cable Loss.
3. Measurement = Reading Level + Correct Factor
4. Over = Measurement - Limit

No.	Mk.	Freq.	Reading Level	Correct Factor	Measure-ment	Limit	Over	
		MHz		dB	dBuV	dBuV	dB	Detector
1		0.1901	28.05	19.61	47.66	64.03	-16.37	QP
2		0.1901	13.19	19.61	32.80	54.03	-21.23	AVG
3		0.4466	13.85	19.62	33.47	56.94	-23.47	QP
4		0.4466	5.15	19.62	24.77	46.94	-22.17	AVG
5		1.2687	14.73	19.63	34.36	56.00	-21.64	QP
6		1.2687	11.76	19.63	31.39	46.00	-14.61	AVG
7		2.9775	12.18	19.66	31.84	56.00	-24.16	QP
8		2.9775	14.88	19.66	34.54	46.00	-11.46	AVG
9		3.9220	27.63	19.68	47.31	56.00	-8.69	QP
10	*	3.9220	22.80	19.68	42.48	46.00	-3.52	AVG
11		8.2350	11.90	19.76	31.66	60.00	-28.34	QP
12		8.2350	9.95	19.76	29.71	50.00	-20.29	AVG

7. Radiated Emissions

7.1 Block Diagram Of Test Setup

（A）Radiated Emission Test-Up Frequency Below 30MHz

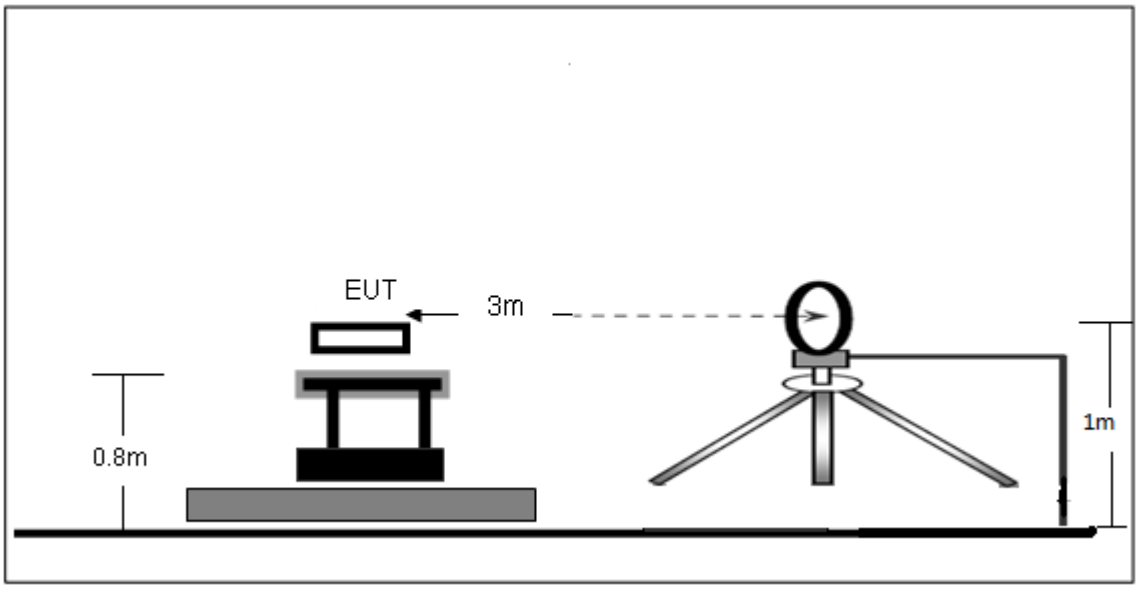

（B）Radiated Emission Test-Up Frequency 30MHz~1GHz

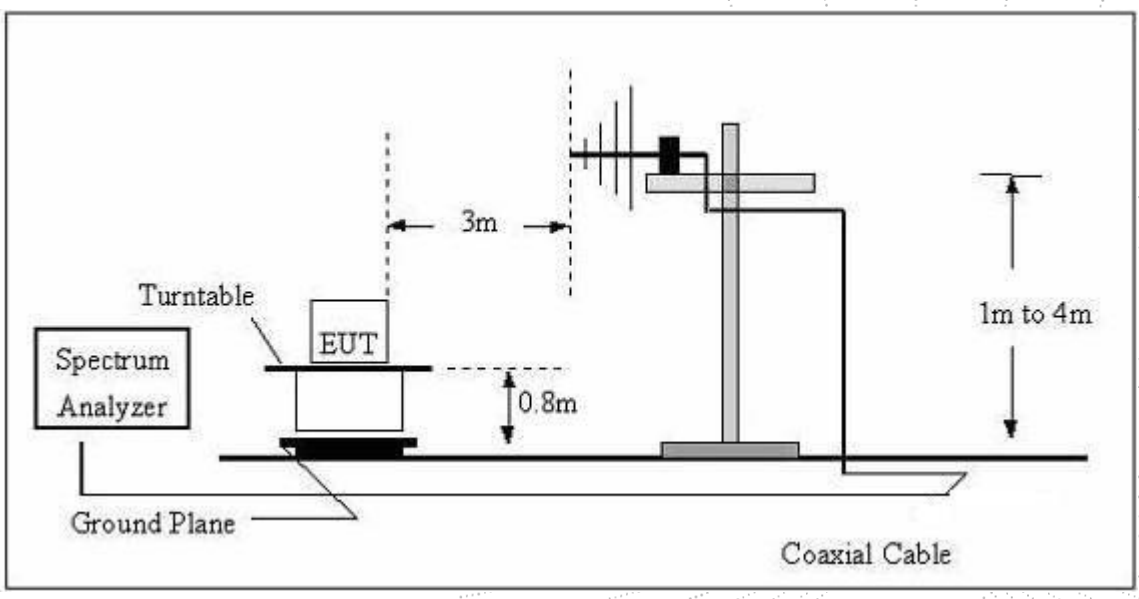

7.2 Limit

FCC §15.209; §15.205.

Test Standard	FCC Part15 C Section 15.209 and 15.205				
Test Limit	Frequency (MHz)	Field strength (microvolt/meter)	Limit (dBuV/m)	Remark	Measurement distance (m)
	0.009MHz~0.490MHz	2400/F(kHz)	-	-	300
	0.490MHz-1.705MHz	24000/F(kHz)	-	-	30
	1.705MHz-30MHz	30	-	-	30
	30MHz~88MHz	100	40.0	Quasi-peak	3
	88MHz~216MHz	150	43.5	Quasi-peak	3
	216MHz~960MHz	200	46.0	Quasi-peak	3
	960MHz~1000MHz	500	54.0	Quasi-peak	3
	Above 1000MHz	500	54.0	Average	3
		-	74.0	Peak	3

7.3 Test procedure

Receiver Parameter	Setting
Attenuation	Auto
9kHz~150kHz	RBW 200Hz for QP
150kHz~30MHz	RBW 9kHz for QP
30MHz~1000MHz	RBW 120kHz for QP

Below 1GHz test procedure as below:

a. The EUT was placed on the top of a rotating table 0.8 meters above the ground at a 3 meter semi-anechoic camber. The table was rotated 360 degrees to determine the position of the highest radiation.

b. The EUT was set 3 meters away from the interference-receiving antenna, which was mounted on the top of a variable-height antenna tower.

c. The antenna height is varied from one meter to four meters above the ground to determine the maximum value of the field strength. Both horizontal and vertical polarizations of the antenna are set to make the measurement.

d. For each suspected emission, the EUT was arranged to its worst case and then the antenna was tuned to heights from 1 meter to 4 meters (for the test frequency of below 30MHz, the antenna was tuned to heights 1 meter) and the rotatable table was turned from 0 degrees to 360 degrees to find the maximum reading.

e. The test-receiver system was set to Peak Detect Function and Specified Bandwidth with Maximum Hold Mode.

f. If the emission level of the EUT in peak mode was 10dB lower than the limit specified, then testing could be stopped and the peak values of the EUT would be reported. Otherwise the emissions that did not have 10dB margin would be re-tested one by one using peak, quasi-peak or average method as specified and then reported in a data sheet.

Above 1GHz test procedure as below:

g. Different between above is the test site, change from Semi- Anechoic Chamber to fully Anechoic Chamber and change form table 0.8 metre to 1.5 metre(Above 18GHz the distance is 1 meter and table is 1.5 metre).

h. Test the EUT in the lowest channel ,the middle channel ,the Highest channel.

Note:

Both horizontal and vertical antenna polarities were tested and performed pretest to three orthogonal axis. The worst case emissions were reported.

7.4 Test Result

9kHz-30MHz

Temperature:	26 ℃	Relative Humidity:	54%
Pressure:	101KPa	Test Voltage:	AC 120V/60Hz
Test Mode:	Mode 1	Polarization :	---

Frequency	Meter Reading	Factor	Emission Level	Limits	Margin	Detector Type
(kHz)	(dBμV)	(dB)	(dBμV/m)	(dBμV/m)	(dB)	
21.58	42.15	20.15	65.42	140.92	-75.50	PK
21.58	45.27	20.15	62.30	120.92	-58.62	AV
60.51	51.35	20.33	71.68	131.97	-60.29	PK
60.51	45.73	20.33	66.06	111.97	-45.91	AV
150.68	63.52	20.55	84.07	124.04	-39.97	PK
150.68	61.68	20.55	82.23	104.04	-21.81	AV
531.48	37.16	20.64	57.80	73.09	-15.29	QP
751.62	36.35	21.26	57.61	70.08	-12.47	QP
1206.26	31.75	22.32	54.07	65.98	-11.91	QP

Note:
Pre-scan in the all of mode, the worst case in of was recorded.
Factor = antenna factor + cable loss – pre-amplifier.
Margin = Emission Level- Limit.

Between 30MHz – 1GHz

Temperature:	26 ℃	Relative Humidity:	54%
Pressure:	101KPa	Phase :	Horizontal
Test Mode:	Mode 1	Test Voltage:	AC 120V/60Hz

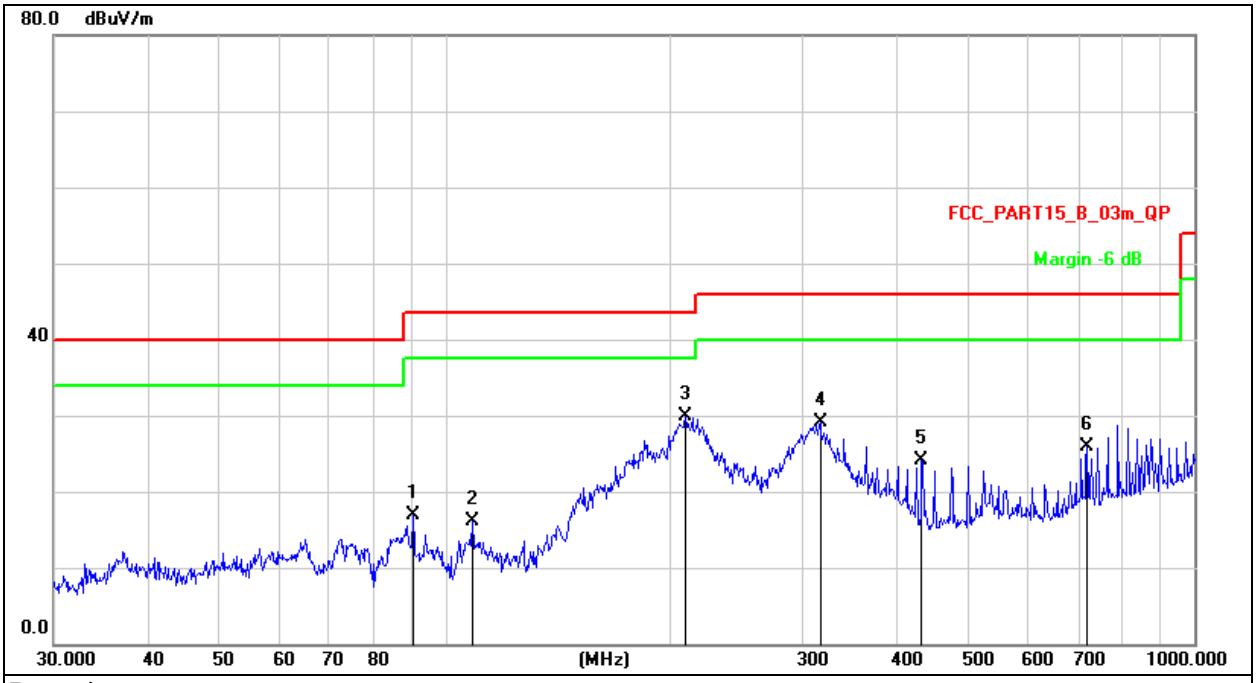

Remark:
1. Factor = Antenna Factor + Cable Loss – Pre-amplifier.
2. Measurement = Reading Level + Correct Factor
3. Over = Measurement - Limit

No.	Mk.	Freq.	Reading Level	Correct Factor	Measure-ment	Limit	Over	
		MHz	dBuV	dB	dBuV/m	dB/m	dB	Detector
1		90.5374	34.86	-18.00	16.86	43.50	-26.64	QP
2		108.6470	33.04	-16.84	16.20	43.50	-27.30	QP
3	*	209.3129	46.02	-16.09	29.93	43.50	-13.57	QP
4		316.5890	42.31	-13.15	29.16	46.00	-16.84	QP
5		432.5457	34.55	-10.36	24.19	46.00	-21.81	QP
6		719.1995	30.72	-4.83	25.89	46.00	-20.11	QP

Temperature:	26 ℃	Relative Humidity:	54%
Pressure:	101KPa	Phase :	Vertical
Test Mode:	Mode 1	Test Voltage:	AC 120V/60Hz

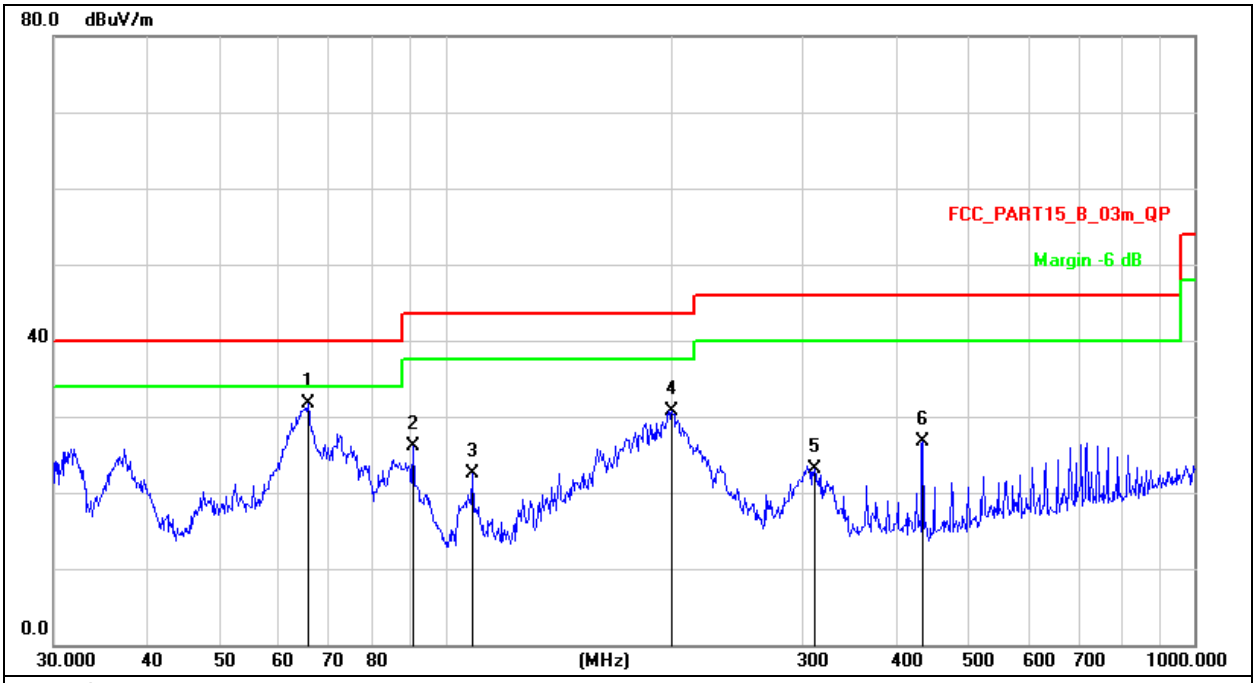

Remark:
1. Factor = Antenna Factor + Cable Loss – Pre-amplifier.
2. Measurement = Reading Level + Correct Factor
3. Over = Measurement - Limit

No.	Mk.	Freq.	Reading Level	Correct Factor	Measure-ment	Limit	Over	
		MHz	dBuV	dB	dBuV/m	dB/m	dB	Detector
1	*	65.5727	48.92	-17.18	31.74	40.00	-8.26	QP
2		90.5374	44.02	-18.00	26.02	43.50	-17.48	QP
3		108.6470	39.33	-16.84	22.49	43.50	-21.01	QP
4		200.6881	47.04	-16.28	30.76	43.50	-12.74	QP
5		311.0867	36.46	-13.30	23.16	46.00	-22.84	QP
6		434.0651	37.00	-10.33	26.67	46.00	-19.33	QP

8. Bandwidth Test

1. Set RBW = 1%~5% OBW.

2. Set the video bandwidth (VBW) ≥ 3 x RBW.

3. Detector = Peak.

4. Trace mode = max hold.

5. Sweep = auto couple.

6. Allow the trace to stabilize.

7. Measure the maximum width of the emission that is constrained by the frequencies associated with the two outermost amplitude points (upper and lower frequencies) that are attenuated by 20 dB relative to the maximum level measured in the fundamental emission.

8.1 Block Diagram Of Test Setup

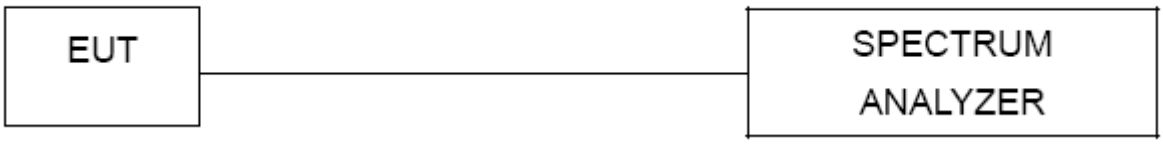

8.2 Test Result

Temperature:	26 ℃	Relative Humidity:	54%
Pressure:	101KPa		

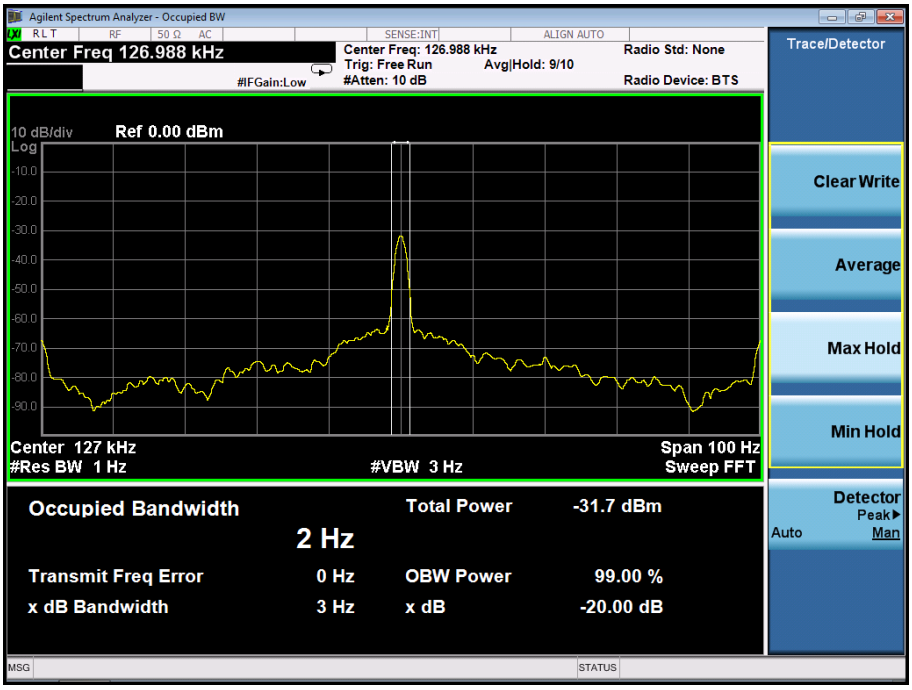

9. Antenna Requirements

For intentional device, according to FCC 47 CFR Section 15.203, An intentional radiator shall be designed to ensure that no antenna other than that furnished by the responsible party shall be used with the device. The use of a permanently attached antenna or of an antenna that uses a unique coupling to the intentional radiator shall be considered sufficient to comply with the provisions of this section. The manufacturer may design the unit so that a broken antenna can be replaced by the user, but the use of a standard antenna jack or electrical connector is prohibited.

The antenna used for this product is Inductive loop coil antenna.

10. EUT Photographs

EUT Photo 1

EUT Photo 2

EUT Photo 3

EUT Photo 4

11. EUT Test Setup Photographs

Conducted emissions

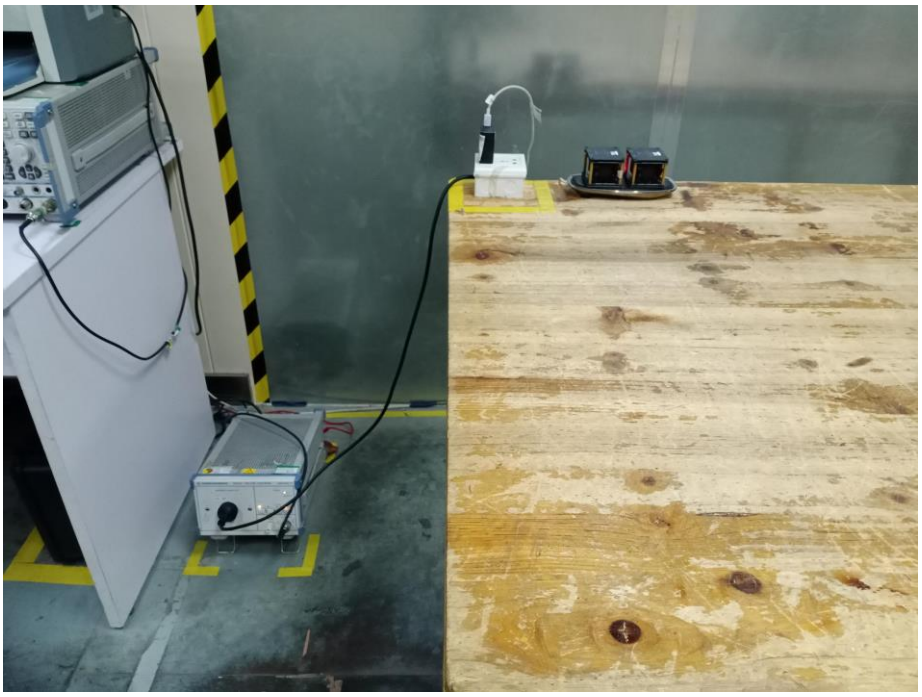

Radiated Measurement Photos

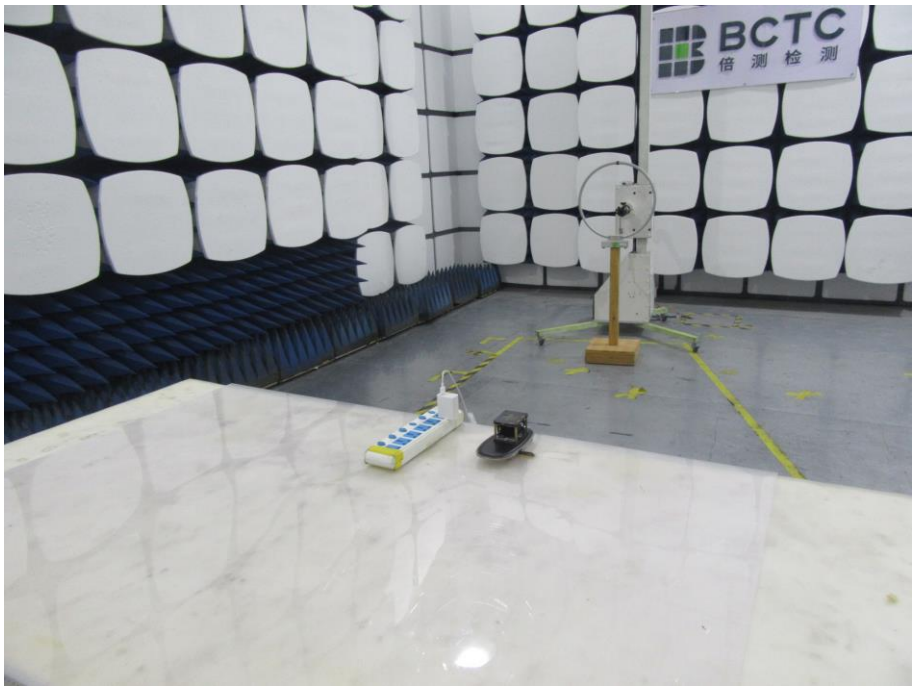

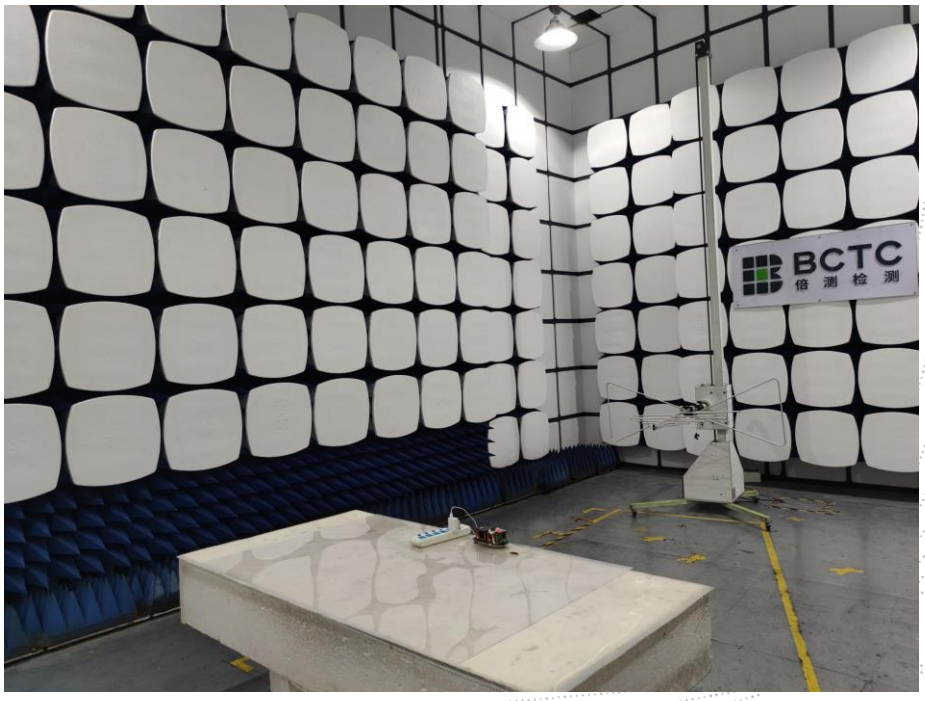

STATEMENT

1.The equipment lists are traceable to the national reference standards.

2.The test report can not be partially copied unless prior written approval is issued from our lab.

3.The test report is invalid without stamp of laboratory.

4.The test report is invalid without signature of person(s) testing and authorizing.

5.The test process and test result is only related to the Unit Under Test.

6.The quality system of our laboratory is in accordance with ISO/IEC17025.

7.If there is any objection to report, the client should inform issuing laboratory within 15 days from the date of receiving test report.

Address:
1-2/F., Building B, Pengzhou Industrial Park, No.158, Fuyuan 1st Road, Tangwei, Fuhai Subdistrict, Bao'an District, Shenzhen, Guangdong, China

TEL：400-788-9558

P.C.: 518103

FAX：0755-33229357

Website：http://www.chnbctc.com

E-Mail：bctc@bctc-lab.com.cn

※※※※※ **END** ※※※※※