TEST REPORT

Product Name : The wireless remote controller
Model Number : TX0301
FCC ID : 2AWYP-TX0301

Prepared for : SHAOXING SIYUAN TECHNOLOGY CO., LTD.
Address : ChangfengIndustial Zone, Pingshui new city, Keqiao District, Shaoxing, Zhejiang, China

Prepared by : EMTEK (SHENZHEN) CO., LTD.
Address : Building 69,Majialong Industry Zone,Nanshan District, Shenzhen, Guangdong, China

Tel: (0755) 26954280
Fax: (0755) 26954282

Report Number : ES200615020W
Date(s) of Tests : June 10,2020 to July 26,2020
Date of issue : July 27, 2020

TABLE OF CONTENTS

1 TEST RESULT CERTIFICATION 3

2 EUT TECHNICAL DESCRIPTION 4

3 SUMMARY OF TEST RESULT 5

4 TEST METHODOLOGY 6

4.1 GENERAL DESCRIPTION OF APPLIED STANDARDS 6
4.2 MEASUREMENT EQUIPMENT USED 6
4.3 DESCRIPTION OF TEST MODES 7

5 FACILITIES AND ACCREDITATIONS 8

5.1 FACILITIES 8
5.2 LABORATORY ACCREDITATIONS AND LISTINGS 8

6 TEST SYSTEM UNCERTAINTY 9

7 SETUP OF EQUIPMENT UNDER TEST 10

7.1 RADIO FREQUENCY TEST SETUP 1 10
7.2 RADIO FREQUENCY TEST SETUP 2 10
7.3 CONDUCTED EMISSION TEST SETUP 11
7.4 BLOCK DIAGRAM CONFIGURATION OF TEST SYSTEM 12
7.5 SUPPORT EQUIPMENT 12

8 TEST REQUIREMENTS 13

8.1 OCCUPIED BANDWIDTH 13
8.2 FREQUENCY STABILITY 15
8.3 RADIATED SPURIOUS EMISSION 16
8.4 TRANSMISSION REQUIREMEN 24
8.5 CONDUCTED EMISSIONS TEST 26
8.6 ANTENNA APPLICATION 27

1 TEST RESULT CERTIFICATION

Applicant	:	SHAOXING SIYUAN TECHNOLOGY CO., LTD.
Address	:	ChangfengIndustial Zone, Pingshui new city, Keqiao District, Shaoxing, Zhejiang, China
Manufacturer	:	SHAOXING SIYUAN TECHNOLOGY CO., LTD.
Address	:	ChangfengIndustial Zone, Pingshui new city, Keqiao District, Shaoxing, Zhejiang, China
EUT	:	The wireless remote controller
Model Name	:	TX0301
Trademark	:	SIYUAN

Measurement Procedure Used:

APPLICABLE STANDARDS	
STANDARD	**TEST RESULT**
FCC 47 CFR Part 2, Subpart J FCC 47 CFR Part 15, Subpart C	PASS

The above equipment was tested by EMTEK (SHENZHEN) CO., LTD. The test data, data evaluation, test procedures, and equipment configurations shown in this report were made in accordance with the procedures given in ANSI C63.10 (2013) and the energy emitted by the sample EUT tested as described in this report is in compliance with the requirements of FCC Rules Part 2 and Part 15.231

The test results of this report relate only to the tested sample identified in this report.

Date of Test : June 10,2020 to July 26,2020

Prepared by : SewenGuo /Editor

Reviewer : Joe Xia/Editor

Approve & Authorized Signer : Lisa Wang/Manager

2 EUT TECHNICAL DESCRIPTION

Characteristics	Description
Product:	The wireless remote controller
Model Number:	TX0301
Modulation:	ASK modulation
Operating Frequency Range(s):	433.92±0.075MHZ
Number of Channels:	1 channel
Max Transmit Power:	81.05dBuV/m
Antenna Type :	PCB Antenna
Antenna Gain:	2.0 dBi
Power supply:	DC 6V
Temperature Range	-20°C ~ +70°C

Note: *for more details, please refer to the User's manual of the EUT.*

3 SUMMARY OF TEST RESULT

FCC PartClause	Test Parameter	Verdict	Remark
15.231(c)	Occupied Bandwidth	PASS	
15.231(d)	Frequency stability	N/A	
15.231(b)	Radiated Spurious Emissions	PASS	
15.231(b)	Transmission Requirement	PASS	
15.203	Antenna Requirement	PASS	
15.207(a)	Conducted Emission	N/A	
NOTE1: N/A (Not Applicable)			

RELATED SUBMITTAL(S) / GRANT(S):

This submittal(s) (test report) is intended for FCC ID: 2AWYP-TX0301 filing to comply with Section 15.231of the FCC Part 15, Subpart C Rules.

4 TEST METHODOLOGY

4.1 GENERAL DESCRIPTION OF APPLIED STANDARDS

According to its specifications, the EUT must comply with the requirements of the following standards:
FCC 47 CFR Part 2, Subpart J
FCC 47 CFR Part 15, Subpart C

4.2 MEASUREMENT EQUIPMENT USED

4.2.1 Conducted Emission Test Equipment

EQUIPMENT TYPE	MFR	MODEL NUMBER	SERIAL NUMBER	LASTCAL.	DUE CAL.
Test Receiver	Rohde & Schwarz	ESCS30	828985/018	May 18, 2020	May 17, 2021
L.I.S.N.	Schwarzbeck	NNLK8129	8129203	May 18, 2020	May 17, 2021
50Ω Coaxial Switch	Anritsu	MP59B	M20531	May 18, 2020	May 17, 2021
Pulse Limiter	Rohde & Schwarz	ESH3-Z2	100006	May 18, 2020	May 17, 2021
Voltage Probe	Rohde & Schwarz	TK9416	N/A	May 18, 2020	May 17, 2021

4.2.2 Radiated Emission Test Equipment

EQUIPMENT TYPE	MFR	MODEL NUMBER	SERIAL NUMBER	LAST CAL.	DUE CAL.
EMI Test Receiver	Rohde & Schwarz	ESU	1302.6005.26	May 18, 2020	May 17, 2021
Pre-Amplifier	HP	8447D	2944A07999	May 17, 2020	May 16, 2021
Bilog Antenna	Schwarzbeck	VULB9163	142	May 17, 2020	May 16, 2021
Loop Antenna	ARA	PLA-1030/B	1029	May 17, 2020	May 16, 2021
Horn Antenna	Schwarzbeck	BBHA 9170	BBHA9170399	May 18, 2020	May 17, 2021
Horn Antenna	Schwarzbeck	BBHA 9120	D143	May 17, 2020	May 16, 2021
Cable	Schwarzbeck	AK9513	ACRX1	May 18, 2020	May 17,2021
Cable	Rosenberger	N/A	FP2RX2	May 18, 2020	May 17,2021
Cable	Schwarzbeck	AK9513	CRPX1	May 18, 2020	May 17,2021
Cable	Schwarzbeck	AK9513	CRRX2	May 18, 2020	May 17, 2021

4.2.3 Radio Frequency Test Equipment

EQUIPMENT TYPE	MFR	MODEL NUMBER	SERIAL NUMBER	LASTCAL.	DUE CAL.
Spectrum Analyzer	Agilent	E4407B	88156318	May 16, 2020	May 15, 2021
Signal Analyzer	Agilent	N9010A	My53470879	May 16, 2020	May 15, 2021
Power meter	Anritsu	ML2495A	0824006	May 16, 2020	May 15, 2021
Power sensor	Anritsu	MA2411B	0738172	May 16, 2020	May 15, 2021

Remark: *Each piece of equipment is scheduled for calibration once a year.*

4.3 DESCRIPTION OF TEST MODES

The EUT has been tested under its typical operating condition.
The EUT configuration for testing is installed on RF field strength measurement to meet the Commissions requirement and operating in a manner which intends to maximize its emission characteristics in a continuous normal application.

The Transmitter was operated in the normal operating mode. The TX frequency was fixed which was for the purpose of the measurements.

Test of channel included the lowest and middle and highest frequency to perform the test, then record on this report.
Pre-defined engineering program for regulatory testing used to control the EUT for staying in continuous transmitting mode is programmed.

Frequency and Channel list:

Channel	Frequency (MHz)	Channel	Frequency (MHz)	Channel	Frequency (MHz)
0	433.92				

Test Frequency and Channel list:

Lowest Frequency		Middle Frequency		Highest Frequency	
Channel	Frequency (MHz)	Channel	Frequency (MHz)	Channel	Frequency (MHz)
0	433.92				

5 FACILITIES AND ACCREDITATIONS

5.1 FACILITIES

All measurement facilities used to collect the measurement data are located at

Building 69, Majialong Industry Zone District, Nanshan District, Shenzhen, China
The sites are constructed in conformance with the requirements of ANSI C63.7, ANSI C63.10 and CISPR Publication 32.

5.2 LABORATORY ACCREDITATIONS AND LISTINGS

Site Description

EMC Lab.	:	Accredited by CNAS, 2018.11.30 The certificate is valid until 2022.10.28 The Laboratory has been assessed and proved to be in compliance with CNAS-CL01:2018 (identical to ISO/IEC 17025:2017) The Certificate Registration Number is L2291 Accredited by FCC, August 09, 2018 Designation Number: CN1204 Test Firm Registration Number: 882943 Accredited by A2LA, August 08, 2018 The Certificate Registration Number is 4321.01 Accredited by Industry Canada, November 09, 2018 The Conformity Assessment Body Identifier is CN0008
Name of Firm	:	EMTEK(SHENZHEN) CO., LTD.
Site Location	:	Building 69, Majialong Industry Zone, Nanshan District, Shenzhen, Guangdong, China

6 TEST SYSTEM UNCERTAINTY

The following measurement uncertainty levels have been estimated for tests performed on the apparatus:

Parameter	Uncertainty
Radio Frequency	±1x10^-5
Maximum Peak Output Power Test	±1.0dB
Conducted Emissions Test	±2.0dB
Radiated Emission Test	±2.0dB
Power Density	±2.0dB
Occupied Bandwidth Test	±1.0dB
Band Edge Test	±3dB
All emission, radiated	±3dB
Antenna Port Emission	±3dB
Temperature	±0.5℃
Humidity	±3%

Measurement Uncertainty for a level of Confidence of 95%

7 SETUP OF EQUIPMENT UNDER TEST

7.1 RADIO FREQUENCY TEST SETUP 1

The component's antenna ports(s) of the EUT are connected to the measurement instrument per an appropriate attenuator. The EUT is controlled by PC/software to emit the specified signals for the purpose of measurements.

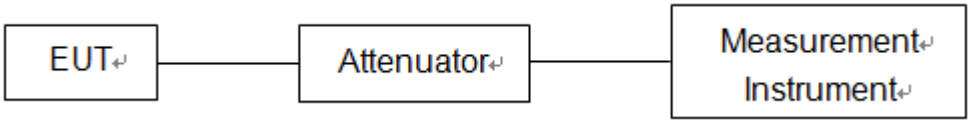

7.2 RADIO FREQUENCY TEST SETUP 2

The test site semi-anechoic chamber has met the requirement of NSA tolerance 4 dB according to the standards: ANSI C63.10. The test distance is 3m.The setup is according to the requirements in Section 13.1.4.1 of ANSI C63.10-2013 and CAN/CSA-CEI/IEC CISPR 22.

Below 30MHz：

The EUT is placed on a turntable 0.8 meters above the ground in the chamber, 3 meter away from the antenna (loop antenna). The Antenna should be positioned with its plane vertical at the specified distance from the EUT androtated about its vertical axis formaximum response at each azimuth about the EUT. The center of the loopshall be 1 m above the ground.For certain applications, the loop antennaplane may also need to be positioned horizontally at the specified distance from the EUT.

30MHz-1GHz：

The EUT is placed on a turntable 0.8 meters above the ground in the chamber, 3 meter away from the antenna. The maximal emission value is acquired by adjusting the antenna height, polarisation and turntable azimuth. Normally, the height range of antenna is 1 m to 4 m, the azimuth range of turntable is 0° to 360°, and the receive antenna has two polarizations Vertical (V) and Horizontal (H).

Above 1GHz：

The EUT is placed on a turntable 1.5 meters above the ground in the chamber, 3 meter away from the antenna. The maximal emission value is acquired by adjusting the antenna height, polarisation and turntable azimuth. Normally, the height range of antenna is 1 m to 4 m, the azimuth range of turntable is 0° to 360°, and the receive antenna has two polarizations Vertical (V) and Horizontal (H).

(a) Radiated Emission Test Set-Up, Frequency Below 30MHz

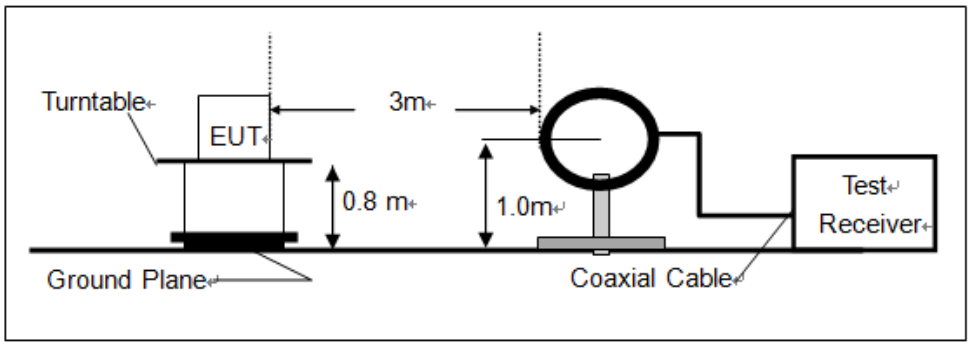

(b)Radiated Emission Test Set-Up, Frequency Below 1000MHz

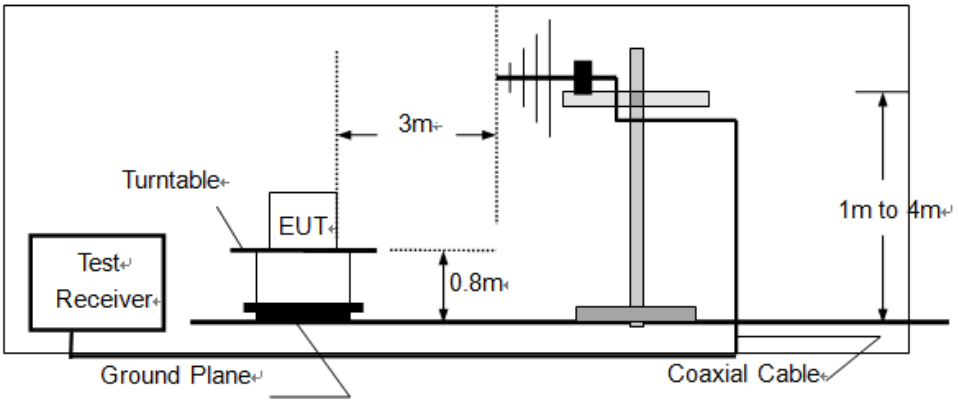

(c) Radiated Emission Test Set-Up, Frequency above 1000MHz

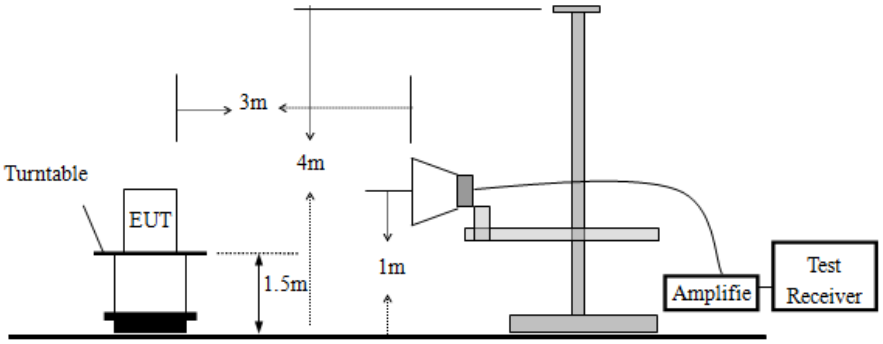

7.3 CONDUCTED EMISSION TEST SETUP

The mains cable of the EUT (maybe per AC/DC Adapter) must be connected to LISN. The LISN shall be placed 0.8 m from the boundary of EUT and bonded to a ground reference plane for LISN mounted on top of the ground reference plane. This distance is between the closest points of the LISN and the EUT. All other units of the EUT and associated equipment shall be at least 0.8m from the LISN.
Ground connections, where required for safety purposes, shall be connected to the reference ground point of the LISN and, where not otherwise provided or specified by the manufacturer, shall be of same length as the mains cable and run parallel to the mains connection at a separation distance of not more than 0.1 m.
According to the requirements in Section 13.1.4.1 of ANSI C63.10-2013 Conducted emissions from the EUT measured in the frequency range between 0.15 MHz and 30 MHz using CISPR Quasi-Peak and average detector mode.

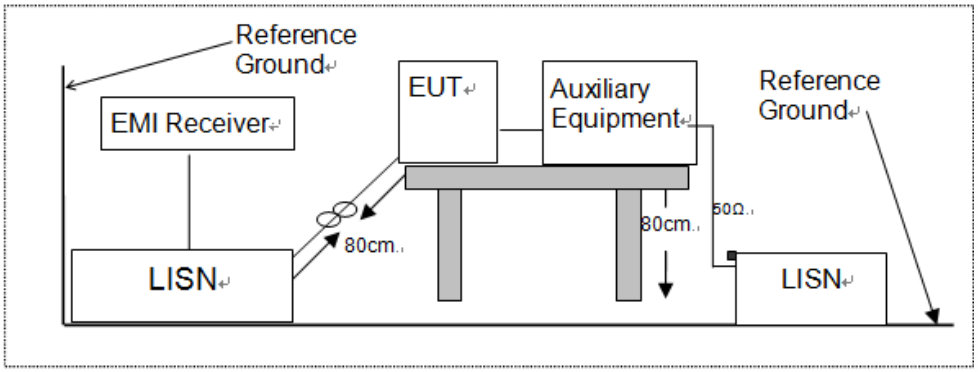

7.4 BLOCK DIAGRAM CONFIGURATION OF TEST SYSTEM

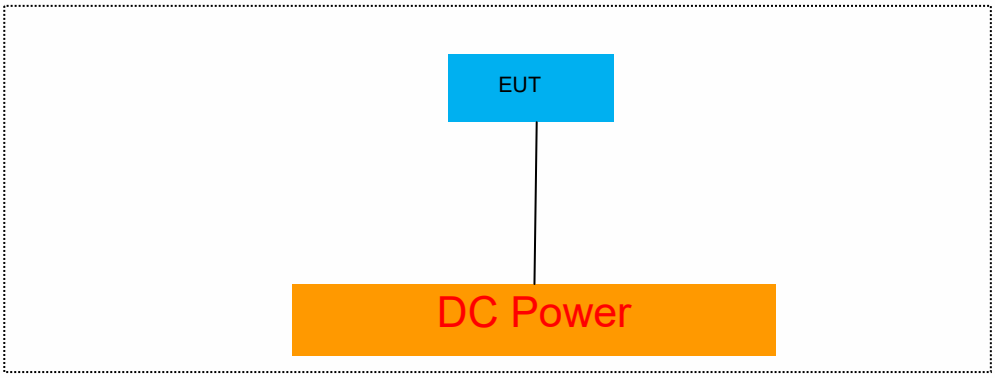

7.5 SUPPORT EQUIPMENT

EUT Cable List and Details			
Cable Description	Length (m)	Shielded/Unshielded	With / Without Ferrite
/	/	/	/

Auxiliary Cable List and Details			
Cable Description	Length (m)	Shielded/Unshielded	With / Without Ferrite
/	/	/	/

Auxiliary Equipment List and Details			
Description	Manufacturer	Model	Serial Number
/	/	/	/

Notes:

1. *All the equipment/cables were placed in the worst-case configuration to maximize the emission during the test.*
2. *Grounding was established in accordance with the manufacturer's requirements and conditions for the intended use.*
3. *Unless otherwise denoted as EUT in 『Remark』 column , device(s) used in tested system is a support equipment*

8 TEST REQUIREMENTS

8.1 OCCUPIEDBANDWIDTH

8.1.1 Applicable Standard

According to FCC Part 2.1049 and part 15.231(c)

8.1.2 Conformance Limit

The bandwidth of the emission shall be no wider than 0.25% of the center frequency for devices operating above 70 MHz and below 900 MHz. For devices operating above 900 MHz, the emission shall be no wider than 0.5% of the center frequency. Bandwidth is determined at the points 20 dB down from the modulated carrier.

8.1.3 Test Configuration

Test according to clause 7.1 radio frequency test setup 1

8.1.4 Test Procedure

The EUT was operating in transmit mode and controlled its channel. Printed out the test result from the spectrum by hard copy function.
The RF output of EUT was connected to the spectrum analyzer by RF cable and attenuator. The path loss was compensated to the results for each measurement.
Set to the maximum power setting and enable the EUT transmit continuously
Set RBW =100kHz.
Set the video bandwidth (VBW) =300kHz.
Set Span= approximately 2 to 3 times the occupied bandwidth
Set Detector = Peak.
Set Trace mode = max hold.
Set Sweep = auto couple.
The EUT should be transmitting at its maximum data rate. Allow the trace to stabilize.Use the marker-to-peak function to set the marker to the peak of the emission. Use themarker-delta function to measure 20 dB down one side of the emission. Reset the markerdeltafunction, and move the marker to the other side of the emission, until it is (asclose as possible to) even with the reference marker level. The marker-delta reading atthis point is the 20 dB bandwidth of the emission.
If this value varies with differentmodes of operation (e.g., data rate, modulation format, etc.), repeat this test for eachvariation.
Measure and record the results in the test report.

8.1.5 Test Results

Temperature:	26° C
Relative Humidity:	54%
ATM Pressure:	1011 mbar

Operation Mode	Channel Number	Channel Frequency (MHz)	Measurement Bandwidth (kHz)	Limit (kHz)	Verdict
ASK	0	433.92	433.26	≤1084.8	PASS
Note: Limit=0.25% of the center frequency=433.92MHz * 0.25% = 1.0848MHz					

Test Model	Occupied Bandwidth ASK Modulation Channel 0:433.92MHz

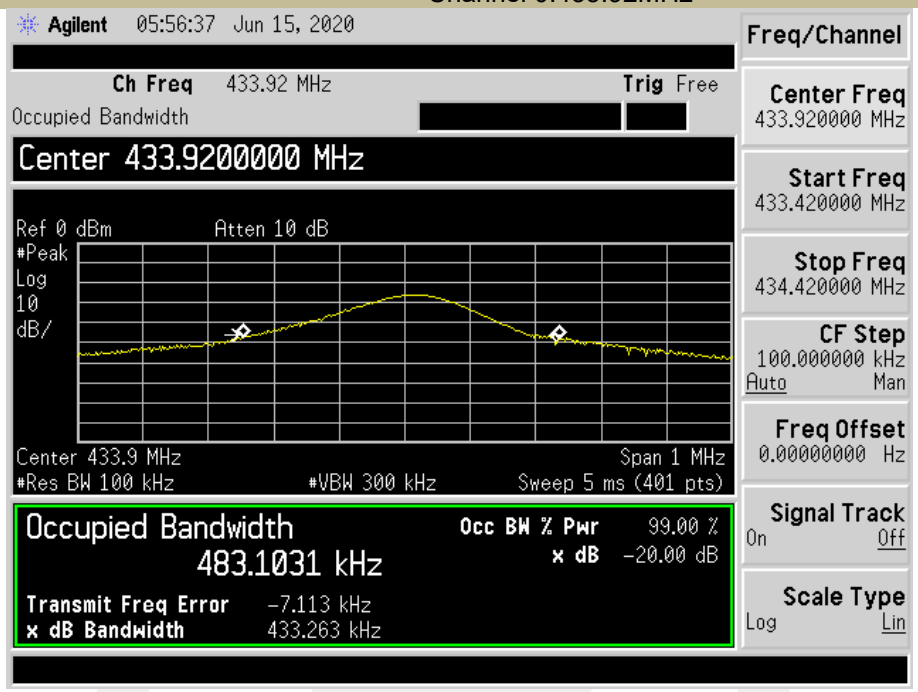

8.2 FREQUENCY STABILITY

8.2.1 Applicable Standard

According to FCC Part 2.1055 and part 15.231(d)

8.2.2 Conformance Limit

According to part 15.231(d),For devices operating within the frequency band 40.66-40.70 MHz, the bandwidth of the emission shall be confined within the band edges and the frequency tolerance of the carrier shall be ±0.01%. This frequency tolerance shall be maintained for a temperature variation of −20 degrees to +50 degrees C at normal supply voltage, and for a variation in the primary supply voltage from 85% to 115% of the rated supply voltage at a temperature of 20 degrees C. For battery operated equipment, the equipment tests shall be performed using a new batter

8.2.3 Test Configuration

Test according to clause7.1 radio frequency test setup 1

8.2.4 Test Procedure

Connect the EUT to frequency analyzer via the antenna connector.
EUT was placed at temperature chamber and connected to an external power supply.
Temperature and voltage condition shall be tested to confirm frequency stability.
(a) Frequency measurements shall be made at the extremes of the specified temperature range and at intervals of not more than 10° centigrade through the range. A period of time sufficient to stabilize all of the components of the oscillator circuit at each temperature level shall be allowed prior to frequency measurement. The short-term transient effects on the frequency of the transmitter due to keying (except for broadcast transmitters) and any heating element cycling normally occurring at each ambient temperature level also shall be shown. Only the portion or portions of the transmitter containing the frequency determining and stabilizing circuitry need be subjected to the temperature variation test.
(b) The frequency stability shall be measured with variation of primary supply voltage as follows:
(1) Vary primary supply voltage from 85 to 115 percent of the nominal value for other than hand carried battery equipment.
(2) For hand carried, battery powered equipment, reduce primary supply voltage to the battery operating end point, which shall be specified by the manufacturer.

8.2.5 Test Results

Temperature:	26° C
Relative Humidity:	54%
ATM Pressure:	1011 mbar

Not applicable, the device operating without the frequency band 40.66-40.70MHz

8.3 RADIATED SPURIOUS EMISSION

8.3.1 Applicable Standard

According to FCC Part 15.231(b) and 15.209

8.3.2 Conformance Limit

Intentional radiators may operate at a periodic rate exceeding that specified in paragraph (a) of this section and may be employed for any type of operation, including operation prohibited in paragraph (a) of this section, provided the intentional radiator complies with the provisions of paragraphs (b) through (d) of this section, except the field strength table in paragraph (b) of this section is replaced by the following:
According toFCC Part 15.231 the field strength Limited

Frequencies (MHz)	Field strength of fundamental @3m		Effective limit for 433.92MHz	
	(uV/m)	dB(uV/m)	(uV/m)	dB(uV/m)
40.66-40.70	2250	67		
70-130	1250	62		
130-174	1250 to 3750*	62 to 71.5*		
174-260	3750	71.5		
260-470	**3750 to 12500***	**71.5 to 81.9***	**4398.67**	**92.87**
Above 470	12500	81.9		

* Linear interpolation

Frequencies (MHz)	Field strength of Spurious emissions @3m		Effective limit for 433.92MHz	
	(uV/m)	dB(uV/m)	(uV/m)	dB(uV/m)
40.66-40.70	225	47		
70-130	125	41.9		
130-174	125 to 375*	41.9 to 51.5*		
174-260	375	51.5		
260-470	**375 to 1250***	**51.5 to 61.9***	**439.867**	**72.87**
Above 470	1250	61.9		

* Linear interpolation

The field intensity in micro-volts per meter can then be determined by the following equation: FI(V/ m) = 10FI (dBV/ m) / 20 The FCC specified emission limits were calculated according the EUT operating frequency and obtained by following linear interpolation equations:

(a) For fundamental frequency:

f_{EUT} : EUT Operating Frequency Emission Limit (V/m)

$$= [f_{EUT}(MHz) - 260(MHz)] \times \frac{12500(V/m) - 3750(V/m)}{470(MHz) - 260(MHz)} + 3750(V/m)$$

(b) For spurious frequencies:

f_{EUT} : EUT Operating Frequency Emission Limit (V/m)

$$= [f_{EUT}(MHz) - 260(MHz)] \times \frac{1250(V/m) - 375(V/m)}{470(MHz) - 260(MHz)} + 375(V/m)$$

Other emissions radiated outside of the specified frequency bands, except for harmonics, shall be attenuated by at least 20 dB below the level of the fundamental or comply with the radiated emissions limits specified in section 1 5.209(a) limit in the table below has to be followed.

Note:

(1) The tighter limit applies at the band edges.

(2) Emission level (dBuV/m)=20log Emission level (uV/m).

FCC Part15 (15.231) , Subpart C		
Fundamental Frequency	Field Strength Of Fundamental	Field Strength of Spurious Emissions
433.92MHz	AV:80.82 dBuV/m at 3m distance	AV:60.82 dBuV/m at 3m distance
	PK:100.82dBuV/m at 3m distance	PK:80.82 dBuV/m at 3m distance

According to FCC Part15.205, Restricted bands

MHz	MHz	MHz	GHz
0.090-0.110	16.42-16.423	399.9-410	4.5-5.15
10.495-0.505	16.69475-16.69525	608-614	5.35-5.46
2.1735-2.1905	16.80425-16.80475	960-1240	7.25-7.75
4.125-4.128	25.5-25.67	1300-1427	8.025-8.5
4.17725-4.17775	37.5-38.25	1435-1626.5	9.0-9.2
4.20725-4.20775	73-74.6	1645.5-1646.5	9.3-9.5
6.215-6.218	74.8-75.2	1660-1710	10.6-12.7
6.26775-6.26825	123-138	2200-2300	14.47-14.5
8.291-8.294	149.9-150.05	2310-2390	15.35-16.2
8.362-8.366	156.52475-156.52525	2483.5-2500	17.7-21.4
8.37625-8.38675	156.7-156.9	2690-2900	22.01-23.12
8.41425-8.41475	162.0125-167.17	3260-3267	23.6-24.0
12.29-12.293	167.72-173.2	3332-3339	31.2-31.8
12.51975-12.52025	240-285	3345.8-3358	36.43-36.5
12.57675-12.57725	322-335.4	3600-4400	(2)
13.36-13.41			

According to FCC Part15.205,the level of any transmitter spurious emission in Restricted bands shall not exceed the level of the emission specified in the following table

Restricted Frequency(MHz)	Field Strength (μV/m)	Field Strength (dBμV/m)	Measurement Distance
0.009-0.490	2400/F(KHz)	20 log (uV/m)	300
0.490-1.705	24000/F(KHz)	20 log (uV/m)	30
1.705-30	30	29.5	30
30-88	100	40	3
88-216	150	43.5	3
216-960	200	46	3
Above 960	500	54	3

8.3.3 Test Configuration

Test according to clause 7.2 radio frequency test setup 2

8.3.4 Test Procedure

This test is required for any spurious emission that falls in a Restricted Band, as defined in Section 15.205. It must be performed with the highest gain of each type of antenna proposed for use with the EUT. Use the following spectrum analyzer settings:
The EUT was placed on a turn table which is 0.8m above ground plane.
Maximum procedure was performed on the highest emissions to ensure EUT compliance.
Span = wide enough to fully capture the emission being measured
RBW = 1 MHz for f ≥ 1 GHz(1GHz to6GHz), 100 kHz for f < 1 GHz(30MHz to 1GHz), 200Hz for f<150KHz(9KHz to 150KHz), 9KHz for f<30MHz(150KHz to 30KHz)
VBW ≥ RBW
Sweep = auto

Detector function = peak
Trace = max hold
Follow the guidelines in ANSI C63.10-2013 with respect to maximizing the emission by rotating the EUT, measuring the emission while the EUT is situated in three orthogonal planes (if appropriate), adjusting the measurement antenna height and polarization, etc. A pre-amp and a high pass filter are required for this test, in order to provide the measuring system with sufficient sensitivity. Allow the trace to stabilize. The peak reading of the emission, after being corrected by the antenna factor, cable loss, pre-amp gain, etc., is the peak field strength, which must comply with the limit specified in Section 15.35(b). Submit this data.
Now set the VBW to 10 Hz, while maintaining all of the other instrument settings. This peak level, once corrected, must comply with the limit specified in Section 15.209. If the dwell time per channel of the hopping signal is less than 100 ms, then the reading obtained with the 10 Hz VBW may be further adjusted by a “duty cycle correction factor”, derived from 20log(dwell time/100 ms), in an effort to demonstrate compliance with the 15.209 limit. Submit this data.
Repeat above procedures until all frequency measured was complete.

- Calculation of Average factor

The output field strengths of specification in accordance with the FCC rules specify measurements with an average detector. During the test, a spectrum analyzer incorporating a peak detector was used. Therefore, a reduction factor can be applied to the resultant peak signal level and compared to the limit for measurement instrumentation incorporating an average detector.
The duty cycle is measured in 100ms or the repetition cycle period, whichever is a shorter time frame, the duty cycle is measured by placing the spectrum analyzer to set zero span at 100kHz resolution bandwidth.
Averaging factor in dB=20log (duty cycle)
Where the duty factor is calculated from following formula:
Duty cycle=(13*1.12+12*0.36)/49.14=38.4%
20log (Duty cycle) =-8.31 dB
Therefore, the averaging factor is -8.31dB.
Repeat above procedures until all frequency measured was complete.

8.3.5 Test Results

Temperature:	26° C
Relative Humidity:	54%
ATM Pressure:	1011 mbar

■ Duty cycle measure

Test Model	Duty cycle measure Channel 0: 433.92MHz

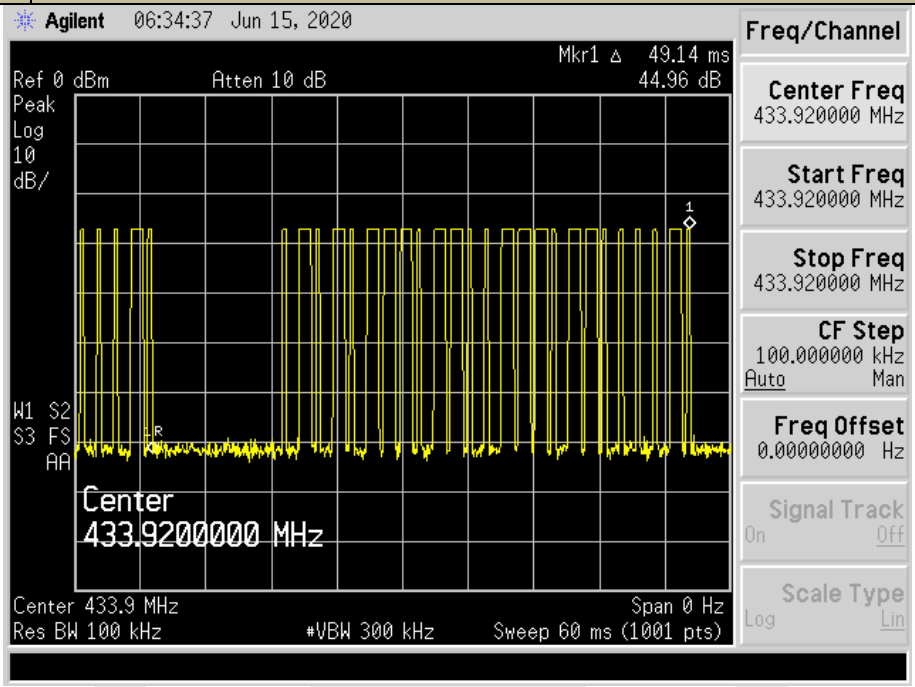

Test Model	Duty cycle measure Channel 0: 433.92MHz

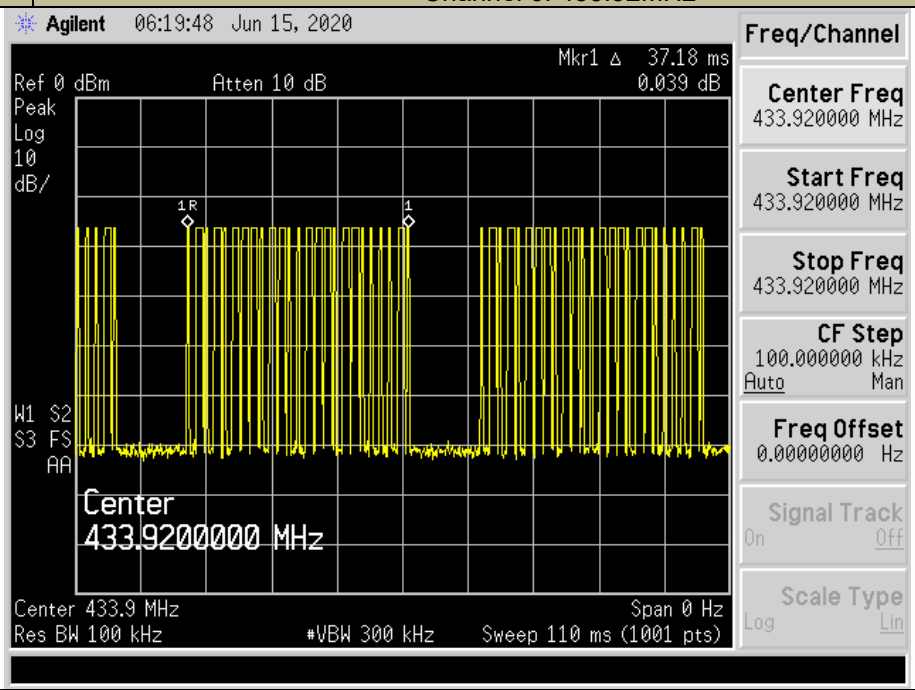

Test Model	Duty cycle measure Channel 0: 433.92MHz

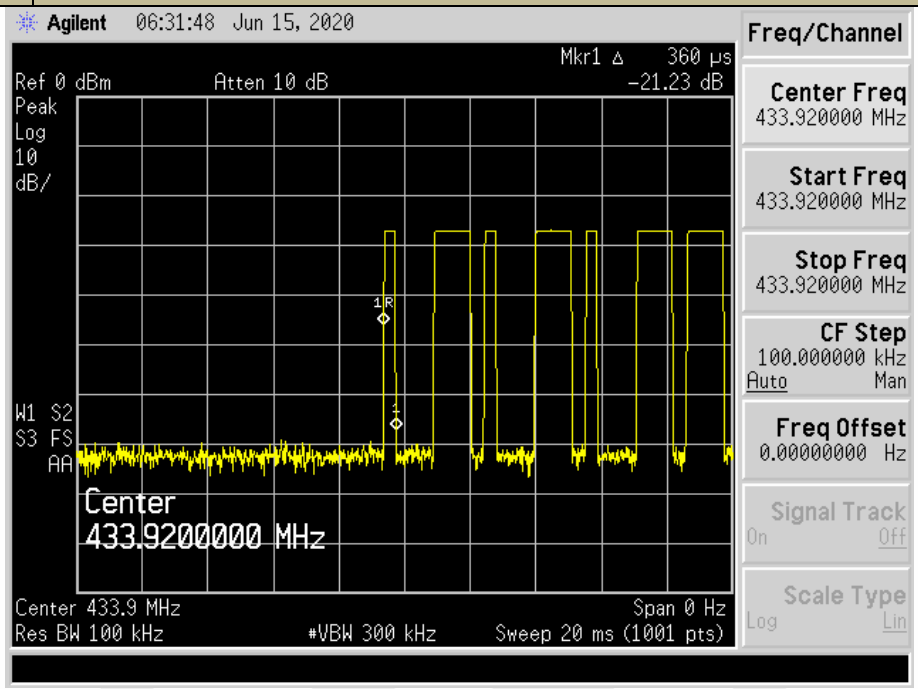

Test Model	Duty cycle measure Channel 0: 433.92MHz

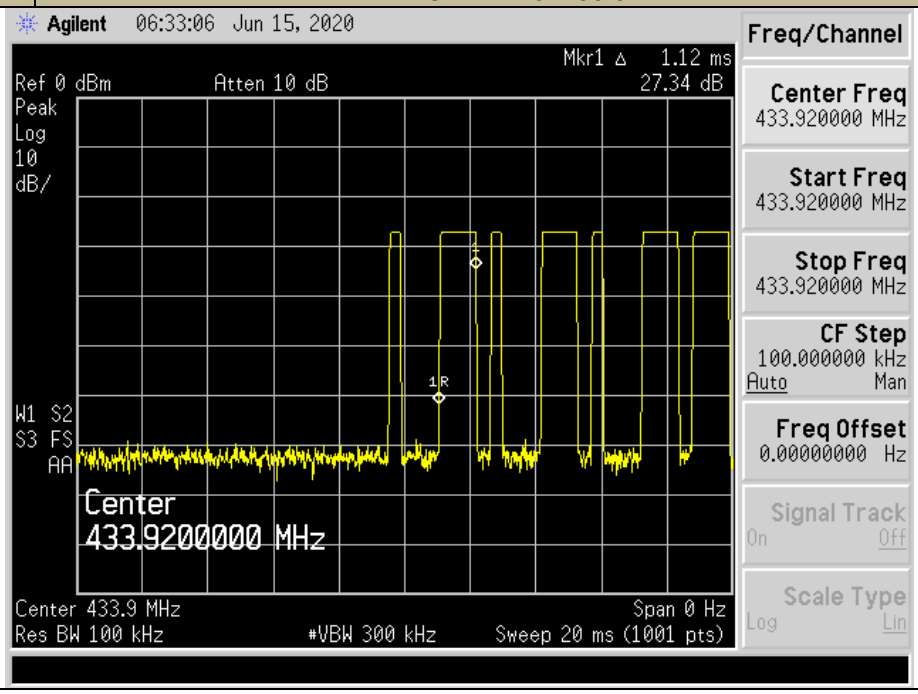

■ Spurious Emission below 30MHz(9KHz to 30MHz)

Freq. (MHz)	Ant.Pol. H/V	Emission Level(dBuV/m)		Limit 3m(dBuV/m)		Over(dB)	
		PK	AV	PK	AV	PK	AV
--	--	--	--	--	--	--	--

Note: the amplitude of spurious emission that is attenuated by more than 20dB below the permissible limit has no need to be reported.
Distance extrapolation factor =40log(Specific distance/ test distance)(dB);
Limit line=Specific limits(dBuV) + distance extrapolation factor

■ Spurious Emission Above 1GHz

Test mode:	Channel 0:433.92MHz						
Freq. (MHz)	Ant.Pol. H/V	Emission Level(dBuV/m)		Limit 3m(dBuV/m)		Over(dB)	
		PK	AV	PK	AV	PK	AV
1285.44	V	44.83	30.78	74.00	54.00	-29.17	-23.22
2912.34	V	43.56	33.29	74.00	54.00	-30.44	-20.71
5544.70	V	48.78	34.37	74.00	54.00	-25.22	-19.63
1283.13	H	49.25	35.62	74.00	54.00	-24.75	-18.38
2154.68	H	44.09	30.18	74.00	54.00	-29.91	-23.82
4321.23	H	47.65	33.67	74.00	54.00	-26.35	-20.33

Note: (1) All Readings are Peak Value (VBW=3MHz) and Peak Value (VBW=10Hz).
(2) Emission Level= Reading Level+Correct Factor +Cable Loss.
(3) Correct Factor= Ant_F + Cab_L - Preamp
(4)The reading of emissions are attenuated more than 20dB below the permissible limits or the field strength is too small to be measured.

■ Spurious Emission below 1GHz (30MHz to 1GHz)

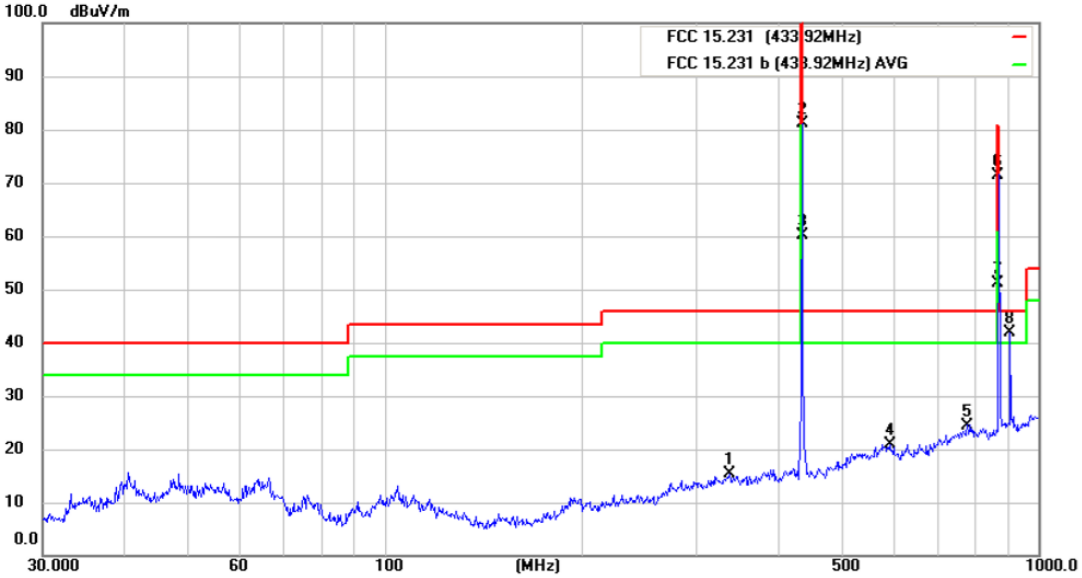

Site Radiated Emission 3m #1 Polarization: ***Vertical*** Temperature: 24

Limit: FCC 15.231 (433.92MHz) Power: DC 6V Humidity: 55 %

M/N: TX0301

Mode:ON

Note:

No.	Mk.	Freq.	Reading Level	Correct Factor	Measure-ment	Limit	Over		Antenna Height	Table Degree	
		MHz	dBuV	dB	dBuV/m	dBuV/m	dB	Detector	cm	degree	Comment
1		336.0350	34.34	-19.04	15.30	46.00	-30.70	QP			
2		434.0649	99.19	-18.14	81.05	100.83	-19.78	peak			
3		434.0649	78.25	-18.14	60.11	80.83	-20.72	AVG			
4		590.9737	34.23	-13.43	20.80	46.00	-25.20	QP			
5		776.8777	34.16	-9.66	24.50	46.00	-21.50	QP			
6		868.2000	80.56	-9.19	71.37	80.83	-9.46	peak			
7		868.2000	60.32	-9.19	51.13	60.83	-9.70	AVG			
8	*	903.3093	49.74	-7.94	41.80	46.00	-4.20	QP			

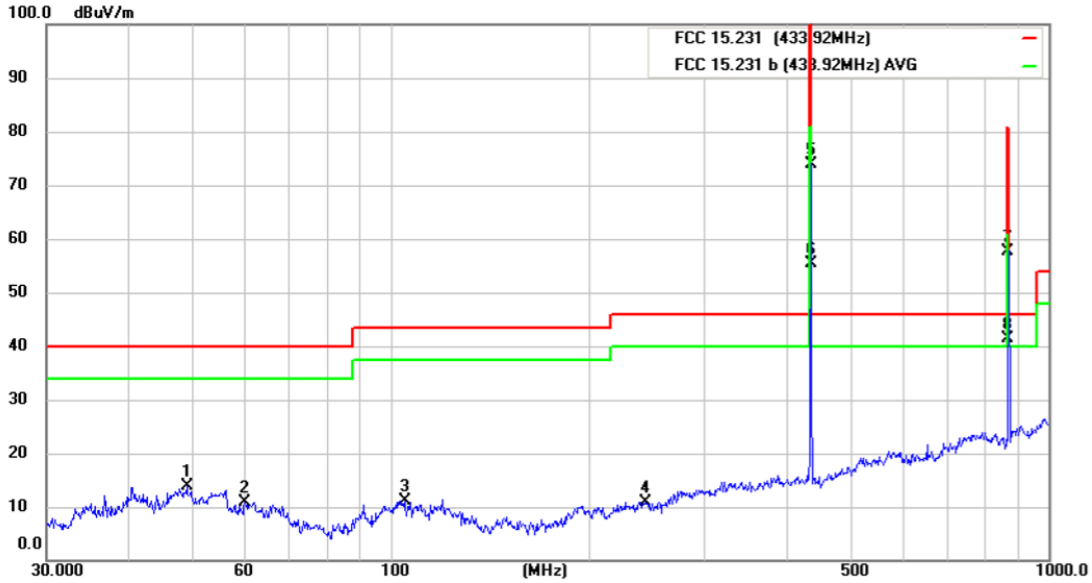

Site Radiated Emission 3m #1 Polarization: ***Horizontal*** Temperature: 24

Limit: FCC 15.231 (433.92MHz) Power: DC 6V Humidity: 55 %

M/N: TX0301

Mode:ON

Note:

No.	Mk.	Freq.	Reading Level	Correct Factor	Measure-ment	Limit	Over		Antenna Height	Table Degree	
		MHz	dBuV	dB	dBuV/m	dBuV/m	dB	Detector	cm	degree	Comment
1		49.0144	34.84	-21.04	13.80	40.00	-26.20	QP			
2		60.0690	34.09	-23.29	10.80	40.00	-29.20	QP			
3		104.9030	33.86	-22.76	11.10	43.50	-32.40	QP			
4		244.2321	33.41	-22.51	10.90	46.00	-35.10	QP			
5		434.0649	92.13	-18.14	73.99	100.83	-26.84	peak			
6		434.0649	73.64	-18.14	55.50	80.83	-25.33	AVG			
7		867.9000	66.87	-9.22	57.65	80.83	-23.18	peak			
8	*	867.9000	50.69	-9.22	41.47	60.83	-19.36	AVG			

8.4 TRANSMISSION REQUIREMEN

Applicable Standard

According to FCC Part 15.231(a),

Conformance Limit

1) A manually operated transmitter shall employ a switch that will automatically deactivate the transmitter within not more than 5 seconds of being released.
2) A transmitter activated automatically shall cease transmission within 5 seconds after activation.
3) Periodic transmissions at regular predetermined intervals are not permitted. However, polling or supervision transmissions, including data, to determine system integrity of transmitters used in security or safety applications are allowed if the total duration of transmissions does not exceed more than two seconds per hour for each transmitter. There is no limit on the number of individual transmissions, provided the total transmission time does not exceed two seconds per hour.

Test Configuration

Test according to clause 7.1 radio frequency test setup 2

Test Procedure

The following table is the setting of spectrum analyzer.

Spectrum analyzer	Setting
Attenuation	Auto
Span Frequency	0Hz
RB	100KHz
VB	300KHz
Detector	Peak
Trace	Max hold
Sweep Time	10S

a. The transmitter output (antenna port) was connected to the spectrum analyzer.
b. Set RBW of spectrum analyzer to 100KHz and VBW to 300KHz, Set Detector to Peak, Trace to Max Hold.
c. Set the span to 0Hz and the sweep time to 10s and record the value.

Test Results

Temperature:	26° C
Relative Humidity:	54%
ATM Pressure:	1011 mbar

Frequency.(MHz)	Transmission Time seconds	Limit seconds	Verdict
433.92	0.037	5	PASS

Test Model	Transmitter Requirement	
	Channel 0: 433.92MHz	Transmission Time

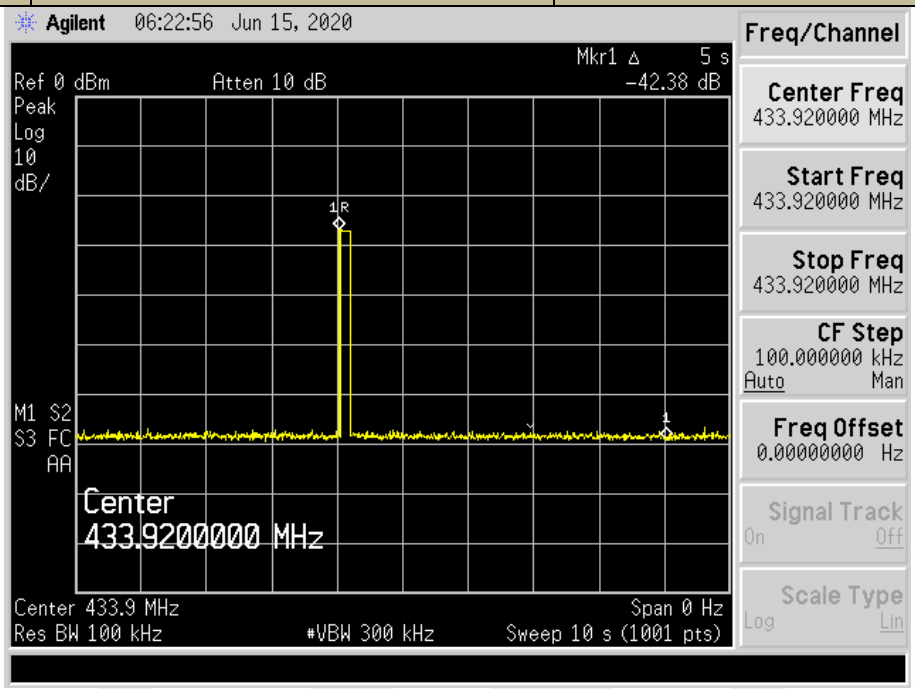

Test Model	Transmitter Requirement	
	Channel 0: 433.92MHz	Transmission Time

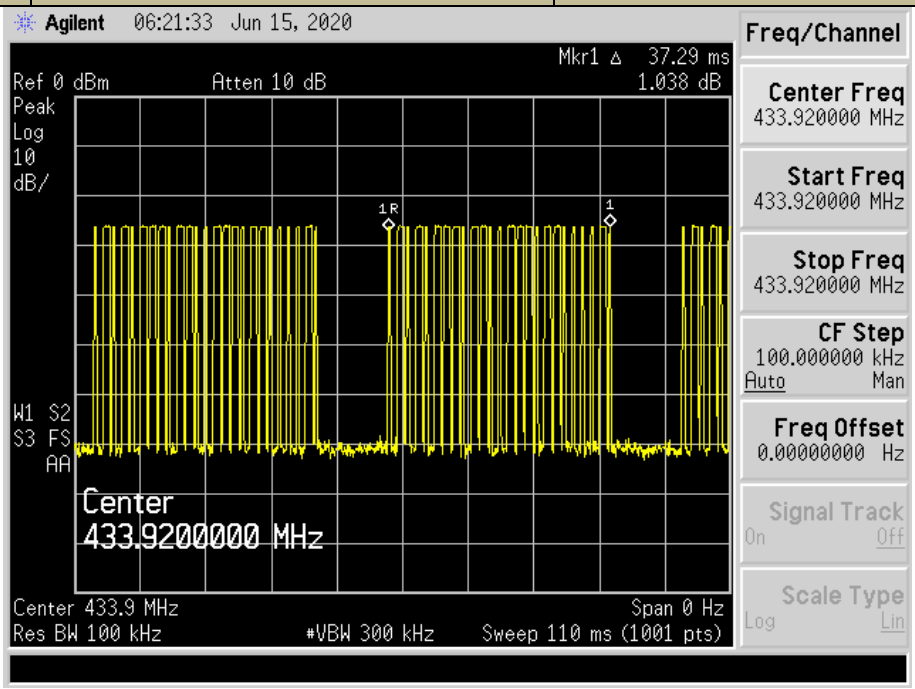

8.5 CONDUCTED EMISSIONS TEST

8.5.1 Applicable Standard

According to FCC Part 15.207(a)

8.5.2 Conformance Limit

Conducted Emission Limit

Frequency(MHz)	Quasi-peak	Average
0.15-0.5	66-56	56-46
0.5-5.0	56	46
5.0-30.0	60	50

Note: 1. The lower limit shall apply at the transition frequencies
2. The limit decreases in line with the logarithm of the frequency in the range of 0.15 to 0.50MHz.

8.5.3 Test Configuration

Test according to clause 7.3conducted emission test setup

8.5.4 Test Procedure

The EUT was placed on a table which is 0.8m above ground plane.
Maximum procedure was performed on the highest emissions to ensure EUT compliance.
Repeat above procedures until all frequency measured were complete.

8.5.5 Test Results

N/A

8.6 ANTENNA APPLICATION

8.6.1 Antenna Requirement

Standard	Requirement
FCC CRF Part15.203	An intentional radiator shall be designed to ensure that no antenna other than that furnished by the responsible party shall be used with the device. The use of a permanently attached antenna or of an antenna that uses a unique coupling to the intentional radiator shall be considered sufficient to comply with the provisions of this section. The manufacturer may design the unit so that a broken antenna can be replaced by the user, but the use of a standard antenna jack or electrical connector is prohibited. This requirement does not apply to carrier current devices or to devices operated under the provisions of §15.211, §15.213, §15.217,§15.219, or §15.221. Further, this requirement does not apply to intentionalradiators that must be professionally installed, such as perimeter protection systems and some field disturbance sensors, or to other intentional radiators which, in accordance with §15.31(d), must be measured at the installation site. However, the installer shall be responsible for ensuring that the proper antenna is employed so that the limits in this part are not exceeded.

For intentional device, according to FCC 47 CFR Section 15.203, an intentional radiator shall be designed to ensure that no antenna other than that furnished by the responsible party shall be used with the device.

8.6.2 Result

Pass

- The EUT has 1 antenna: a PCB Antenna for 433.92MHz TX model, the gain is 2.0dBi;

Note: ☒ Antenna uses a permanently attached antenna which is not replaceable.
☐ Not using a standard antenna jack or electrical connector for antenna replacement
☐ The antenna has to be professionally installed (please provide method of installation)

Which in accordance to section 15.203, please refer to the internal photos.

*** End of Report ***

声 明
Statement

1. 本报告无授权批准人签字及“检验报告专用章”无效；
   This report will be void without authorized signature or special seal for testing report.

2. 未经许可本报告不得部分复制；
   This report shall not be copied partly without authorization.

3. 本报告的检测结果仅对送测样品有效，委托方对样品的代表性和资料的真实性负责；
   The test results or observations are applicable only to tested sample. Client shall be responsible for representativeness of the sample and authenticity of the material.

4. 本检测报告中检测项目标注有特殊符号则该项目不在资质认定范围内，仅作为客户委托、科研、教学或内部质量控制等目的使用；
   The observations or tests with special mark fall outside the scope of accreditation, and are only used for purpose of commission, research, training, internal quality control etc.

5. 本检测报告以实测值进行符合性判定，未考虑不确定度所带来的风险，本实验室不承担相关责任，特别约定、标准或规范中有明确规定的除外；
   The test results or observations are provided in accordance with measured value, without taking risks caused by uncertainty into account. Without explicit stipulation in special agreements, standards or regulations, EMTEK shall not assume any responsibility.

6. 对本检测报告若有异议，请于收到报告之日起 20 日内提出；
   Objections shall be raised within 20 days from the date receiving the report.