HiiBot

BlueFi

Quick Start Guide

1. How to use the BlueFi?

1. BlueFi is SBC has rich I/O resources, can be used independently.
2. BlueFi fully compatible with microbit interface, with microbit's rich peripheral, such as cars, robot expansion board, etc., realize your ideas quickly

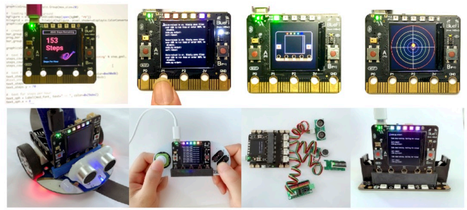

2. Connect to PC and download code

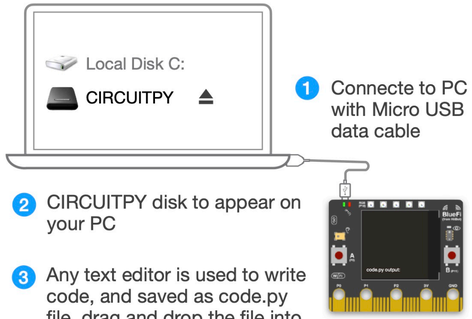

1. Connecte to PC with Micro USB data cable
2. CIRCUITPY disk to appear on your PC
3. Any text editor is used to write code, and saved as code.py file, drag and drop the file into the CIRCUITPY disk

3.1 Programming with Scratch

1. Open the Chrome or Safari browser
2. Input "https://www.ezaoyun.com/" in the addr. bar
3. Click Scratch icon to open the online coding software, select Hardware in the roles manager

Scan the QR code to enter the website online help documentation

https://scratch4bluefi.readthedocs.io/EN/latest/

3.2 Programming with Python

1. Open "https://codewith.mu" to install MU Editor
2. Click "Mode" button and select "CircuitPython"
3. Write the Python code, click "Save" button, and save into the /CIRCUITPY/code.py

Scan the QR code to enter the website online help documentation

https://python4bluefi.readthedocs.io/EN/latest/

3.3 Programming with C/C++

1. Open "www.arduino.cc" to install Arduino IDE
2. Install BSP of the BlueFi(refer to online document)
3. "Tools"—"Board manager", select "HiiBot BlueFi"
4. Write C++ code, double click the Reset button of BlueFi, emerge BLUEFIBOOT disk, and click "Download" button of the Arduino IDE

Scan the QR code to enter the website online help documentation

https://arduino4bluefi.readthedocs.io/EN/latest/

4.1 The I/O resources on the front

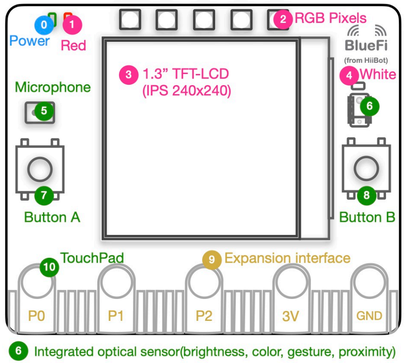

4.2 The I/O resources on the back

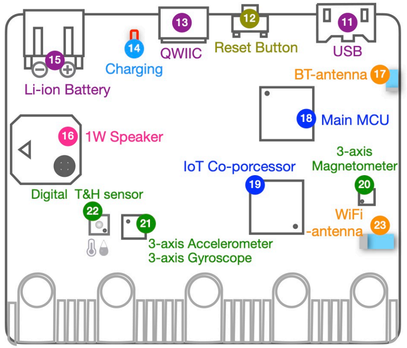

5. How to upgrade the firmware?

1. Download the firmware (http://www.hibottoy.com:8080/static/install/micro/BlueFi_firmware_5.0.uf2)
2. Double click "Reset" button of BlueFi, emerge BLUEFIBOOT disk, and all pixels changed green
3. Drag and drop the firmware file (uf2 format) into the BLUEFIBOOT disk, so easy!

Python is a rapid development of a language, please update the firmware regularly, keep BlueFi firmware that is the newest

Onlin coding, share, and download
Please login to (EZAOYUN)
https://www.ezaoyun.com/

HiiBot 11417000@qq.com

FCC Statement

This device complies with part 15 of the FCC rules. Operation is subject to the following two conditions: (1) thi s device may not cause harmful interference, and (2) this device must accept any interference received, incl uding interference that may cause undesired operation.

Changes or modifications not expressly approved by the party responsible for compliance could void the user' s authority to operate the equipment.

NOTE: This equipment has been tested and found to comply with the limits for a Class B digital device, pursua nt to part 15 of the FCC Rules. These limits are designed to provide reasonable protection against harmful inte rference in a residential installation. This equipment generates uses and can radiate radio frequency energy a nd, if not installed and used in accordance with the instructions, may cause harmful interference to radio com munications. However, there is no guarantee that interference will not occur in a particular installation. If this equipment does cause harmful interference to radio or television reception, which can be determined by turn ing the equipment off and on, the user is encouraged to try to correct the interference by one or more of the following measures:

- Reorient or relocate the receiving antenna.
- Increase the separation between the equipment and receiver.
- Connect the equipment into an outlet on a circuit different from that to which the receiver is connected.
- Consult the dealer or an experienced radio/TV technician for help important announcement

Important Note:

Radiation Exposure Statement

This equipment complies with FCC radiation exposure limits set forth for an uncontrolled environment. This equipment should be installed and operated with minimum distance 20cm between the radiator and your body.

This transmitter must not be co-located or operating in conjunction with any other antenna or transmitter.

Country Code selection feature to be disabled for products marketed to the US/Canada.

This device is intended only for OEM integrators under the following conditions:

1. The antenna must be installed such that 20 cm is maintained between the antenna and users, and
2. The transmitter module may not be co-located with any other transmitter or antenna,
3. For all products market in US, OEM has to limit the operation channels in CH1 to CH11 for 2.4G band by supplied firmware programming tool. OEM shall not supply any tool or info to the end-user regarding to Regulatory Domain change. (if modular only test Channel 1-11)

As long as the three conditions above are met, further transmitter testing will not be required. However, the OEM integrator is still responsible for testing their end-product for any additional compliance requirements required with this module installed.

Important Note:

In the event that these conditions cannot be met (for example certain laptop configurations or co-location with another transmitter), then the FCC authorization is no longer considered valid and the FCC ID cannot be used on the final product. In these circumstances, the OEM integrator will be responsible for re-evaluating the end product (including the transmitter) and obtaining a separate FCC authorization.

End Product Labeling

The final end product must be labeled in a visible area with the following" Contains FCC ID: **2A**X2E-HIIBOTBLUEFI

Manual Information to the End User

The OEM integrator has to be aware not to provide information to the end user regarding how to install or remove this RF module in the user's manual of the end product which integrates this module.

The end user manual shall include all required regulatory information/warning as show in this manual.

Integration instructions for host product manufacturers according to KDB 996369 D03 OEM Manual v01

2.2 List of applicable FCC rules

CFR 47 FCC PART 15 SUBPART C has been investigated. It is applicable to the modular transmitter

2.3 Specific operational use conditions

This module is stand-alone modular. If the end product will involve the Multiple simultaneously transmitting condition or different operational conditions for a stand-alone modular transmitter in a host, host manufacturer have to consult with module manufacturer for the installation method in end system.

2.4 Limited module procedures

This module is Limited single modular without shielding, host manufacturer have to consult with module manufacturer for the module limiting conditions when integrate the module in the host. module manufacturer should reviews detailed test data or host designs prior to giving the host manufacturer approval.

2.5 Trace antenna designs

Not applicable

2.6 RF exposure considerations

This equipment complies with FCC radiation exposure limits set forth for an uncontrolled environment. This equipment should be installed and operated with minimum distance 20cm between the radiator & your body.

2.7 Antennas

This radio transmitter **2AX2E-HIIBOTBLUEFI** has been approved by Federal Communications Commission to operate with the antenna types listed below, with the maximum permissible gain indicated. Antenna types not included in this list that have a gaingreater than the maximum gain indicated for any type listed are strictly prohibited for use with this device.

Model	Type	Connector	Peak gain (dBi)				
			2400-2500MH	5150-5250 MHz	5250-5350 MHz	5470-5725 MHz	5800 MHz
2400-2500MHz	Patch Antenna	/	2.0dBi	/	/	/	/

2.8 Label and compliance information

The final end product must be labeled in a visible area with the following" Contains FCC ID:2AX2E-HIIBOTBLUEFI".

2.9 Information on test modes and additional testing requirements

Host manufacturer which install this modular with limit modular approval should perform the test of radiated emission and spurious emission according to FCC part 15C:15.231 and 15.209 requirement, only if the test result comply with FCC part 15.231 and 15.209 requirement, then the host can be sold legally.

2.10 Additional testing, Part 15 Subpart B disclaimer

Host manufacturer is responsible for compliance of the host system with module installed with all other applicable requirements for the system such as Part 15 B.