hypervibe
WHOLE BODY VIBRATION

# HYPERVIBE G14 HOME
# OWNERS MANUAL

# Contents

Introduction .....2
Gravity Resistance Training (GRT) .....3
Benefits of GRT .....5
Instruction Manual .....6
Important Health Precautions .....11
Assembly Instructions .....13
Upper body resistance bands.....15
Safe & Effective Use .....17
Using the Control panel .....21
Getting started .....21
Maintenance .....22
Specifications.....23
Troubleshooting .....24

# Introduction

Congratulations on your purchase of the Hypervibe - G14 Home, Gravity Resistance Training machine. Small, lightweight and powerful, the G14 Home is a portable powerhouse coupled with innovation. Not only does the G14 Home bring you power that is typically unheard of in similar portable platforms, but for the first time ever, Hypervibe brings you a vibration machine with an Android based touch screen that allows you to control or program the machine via devices such as smartphones, MP3 players, and tablets. Simply connect the Hypervibe G14 software to Wi-Fi and the App will tell the G14 Home what to do and show you how to work out through your choice of 40 goal-based programs. The Hypervibe G14 Home app includes live G-Force readings[1] corresponding to a Low, Medium, and High position on the platform. G-Force is the key to vibration intensity, and for most benefits, the key to getting results. Yet other machines don't provide you with this crucial information, often it's not even provided in the technical specifications.

1 G-Force readings are calculated theoretical values.

# *Gravity Resistance Training (GRT)*

There is a wide spread myth about Whole Body Vibration originating in Russia during the 70's and used for the health of their cosmonauts and the performance of their Olympic athletes. The reality is that modern Whole-Body Vibration began in Germany during the mid-nineties. The pioneering machines were very powerful and designed to increase the gravitational forces acting on a user by applying rapid pulses of vertical force under the users' feet, triggering a range of responses and benefits. Over the years as more manufacturers started to release less powerful Whole-Body Vibration platforms, the original concept became somewhat lost.

Gravity Resistance Training refers to the actual training principle by which users of a Whole-Body Vibration platform experience tremendous benefit to their muscles, bones, and bodies. What sets apart a GRT machine from a regular vibration machine, is its ability to produce high levels of gravity (acceleration), just like the pioneering technology from Germany. In simple terms, this means that the platform's upward vertical force can simulate more than 10 times the strength of Earth's gravity.

While manufacturers of low powered machines attempt to use smoke and mirrors, we at Hypervibe focus on the reality of Whole Body Vibration technology and what sets it apart from other approaches to health and fitness. We focus on its ability to provide true Gravity Resistance!

After all, is Gravity not the force we fight against every day in our lives. Is not our failure to fight gravity

responsible for many of the physical issues we face? No matter how you look at it, the fundamental need to maintain our ability to counter gravity is what defines our strength, stability, balance, function, and most importantly, our healthy lifestyle. It's time to stop just shaking the body and begin to actually improve its performance and integrity. It's time for Whole Body Vibration to become Gravity Resistance Training.

# *Benefits of GRT*

At the time this was written, the effects of GRT had been studied for almost 20 years, with hundreds of clinical papers published in scientific journals.

- ✔ Improved Balance
- ✔ Improved Bone Density
- ✔ Increased Muscle Strength
- ✔ Increased Circulation
- ✔ Increased Flexibility
- ✔ Improved Body Composition
- ✔ Improved Hormonal Profile
- ✔ Cellulite Reduction
- ✔ Increased Muscle Power
- ✔ Pre-Exercise Warm-Up
- ✔ Improved Exercise Recovery
- ✔ Lower Back Pain Relief
- ✔ Joint Protection
- ✔ Reduced Swelling
- ✔ Neurological Stimulation
- ✔ Treatment of Systemic Conditions

# *Instruction Manual*

Familiarize yourself with this manual and look it over carefully. Be sure you understand the control panel operation and the safe exercise positions before using the G14 Home.

**! - NEITHER HYPERVIBE NOR ITS REPRESENTATIVES CAN ACCEPT RESPONSIBILITY FOR ANY DAMAGE OR INJURY INCURRED AS A RESULT FROM INFORMATION PRESENTED IN THIS MANUAL EXCEPT UNDER THE TERMS OF THE PRODUCT WARRANTY.**

## Important Product Safety Instructions

**! - DANGER: WHEN USING AN ELECTRICAL APPLIANCE, BASIC PRECAUTIONS SHOULD ALWAYS BE FOLLOWED, INCLUDING THE FOLLOWING. READ ALL INSTRUCTIONS BEFORE USING THIS MACHINE.**

To reduce risk of burns, fire, electrical shock or injury to persons:

1. Always ensure proper operation of your Hypervibe, it is recommended that your Hypervibe machine be connected to a dedicated 120V 60Hz (North America) or 240 V 50Hz (Asia Pacific/ Europe) electrical circuit. DO NOT USE ELECTRICAL EXTENSION CORDS OR POWER ADAPTORS.

2. Always unplug this machine from the electrical outlet immediately after using and before cleaning.

3. The machine should never be left unattended when plugged in. Unplug from outlet when not in use and before putting on or taking off parts.

- Do not operate under blanket or pillow. Excessive heating can occur and cause fire, electric shock or injury to persons.
- Close supervision is necessary when this machine is used by, on or near children, invalids or disabled persons.
- Use this machine only for its intended use as described in this manual. Do not use attachments not recommended by this manufacturer.
- Never operate this machine if it has a damaged cord or plug, if it is not working properly, if it has been dropped or damaged or dropped into water. Return the machine to a service center for examination and repair.
- Do not carry this machine by supply cords or use cord as a handle.
- Keep the cord away from heated surfaces.

4. Never operate the machine with the air openings blocked. Keep the air openings free of lint, hair and the like.

5. Never drop or insert any object into any opening.

6. Do not use outdoors.

7. Do not operate where aerosol (spray) products are being used or where oxygen is being administered.

8. To disconnect, turn all controls to the off position then remove plug from outlet.

9. Avoid sprinkling water or cleaning the unit with a wet sponge.

10. Always unplug the power cord before cleaning the machine. Use a damp cloth and immediately follow with a clean dry cloth.

11. Keep children away from the machine when in operation and avoid fingers near the platform gap.

**! WARNING – CONNECT THIS APPLIANCE TO A PROPERLY GROUNDED OUTLET ONLY. SEE GROUNDING INSTRUCTIONS BELOW.**

## Grounding instructions

This product must be grounded. If it should malfunction or break- down, grounding provides a path of least resistance for electric current to reduce the risk of electric shock. This product is equipped with a cord having an equipment-grounding conductor and a grounding plug. The plug must be plugged into an appropriate outlet that is properly installed and grounded in accordance with all local codes and ordinances.

! DANGER - IMPROPER CONNECTION OF THE EQUIPMENT GROUNDING CONDUCTOR CAN RESULT IN A RISK OF ELECTRIC SHOCK. CHECK WITH A QUALIFIED ELECTRICIAN OR SERVICEMAN IF YOU ARE IN DOUBT AS TO WHETHER THE PRODUCT IS PROPERLY GROUNDED. DO NOT MODIFY THE PLUG PROVIDED WITH THE PRODUCT. IF IT WILL NOT FIT THE OUTLET, HAVE A PROPER OUTLET INSTALLED BY A QUALIFIED ELECTRICIAN.

This product is for use on a nominal 120V circuit (North America) or 240V (Asia Pacific/Europe) and has a grounding plug that looks like the plug illustrated in sketch A in Figure 1. Make sure that the product is connected to an outlet having the same configuration as the plug. No adapter should be used with this product.

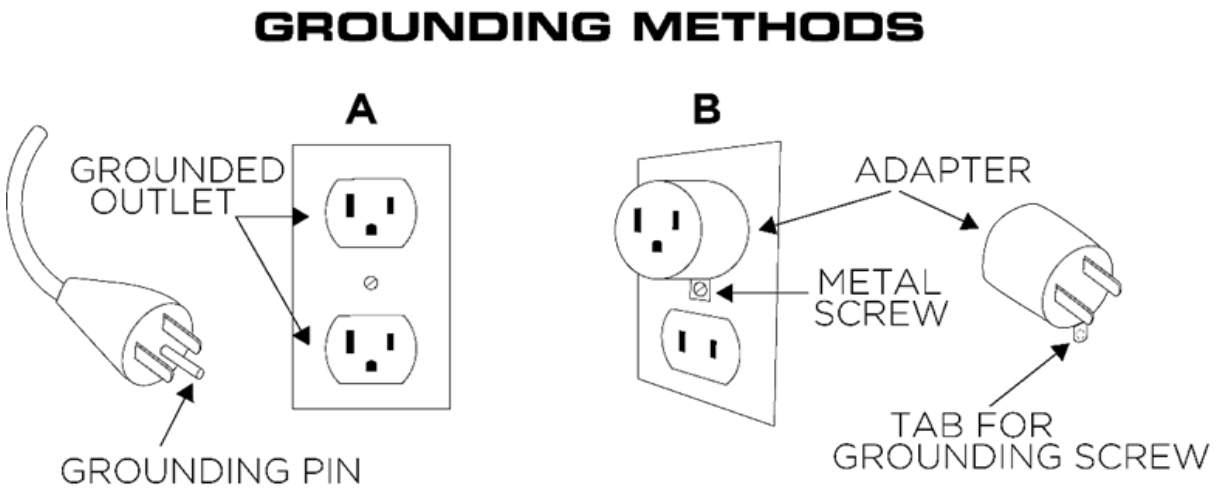


Figure 1

## Places to avoid

Avoid placing the machine anywhere that could become wet, damp or subject to moisture, such as:

- Balcony or veranda
- Screened porch, porch or deck
- Carport

## Places to look for

- Dry, dust free
- Hardwood, tile or carpet over solid concrete foundation
- Nearby standard, grounded three prong electrical outlet

Non-compliance with these warnings may lead to physical injury, accidents, damaged to the machine or fire, and may void warranty.

# *Important Health Precautions*

The following conditions do not necessarily exclude you from using the G14 Home, however, if you suffer from any of the following conditions please confirm with your physician before using the machine:

- Serious cardiovascular disease
- Metal implants
- Pacemaker
- Artificial joints
- Severe diabetes
- Recent infections
- Severe migraines
- Malignant tumors
- Recently placed IUD's, metal pins, or plate
- Recently implanted stents

Conditions that are not suitable for use on the Hypervibe machine include:

- Acute thrombosis
- Acute hernia
- Pregnancy
- Epilepsy
- Gallbladder or kidney stones
- Recent wounds from an operation or surgery
- Recent fractures
- Acute inflammation or pain

If you experience chest pains, nausea, dizziness or shortness of breath, stop exercising immediately and consult your physician before continuing.

We do not recommend use for children unless your

physician has been consulted.
Possible side-effects you may experience when using your hyper- vibe machine include:

- Skin lesions or blisters - These can be prevented by wearing shoes, socks or placing a foam mat on the platform.
- Nausea, dizziness or temporary drop in blood pressure - Stop exercising immediately and reduce the intensity of your training program.

A fall in blood sugar levels - Diabetics should be aware of this and should not exercise on an empty stomach.

# *Assembly Instructions*

The G14 Home requires basic assembly however, some consideration needs to be given to installation.

The G14 Home has rubber suction cap feet that are best suited to hard flat surfaces such as:

- Polished concrete
- Timber floors
- Tiled floors

## Integrated Tower installation

A. Base unit
B. Post
C. M12 hexagon socket screw + spring washer + washer
D. M12 L shape wrench
E. Handles
F. M8 hexagon socket screw + spring washer + washer
G. M8 L shape wrench
H. Straps
I. Communication cable

1. Attach the post to the base by sliding the post under. Use D and C to lock up the post and the base.
2. Connect I on the top and bottom.
3. Put E into B, fix it using F and G
4. Attach the straps by hooking them to the platform.

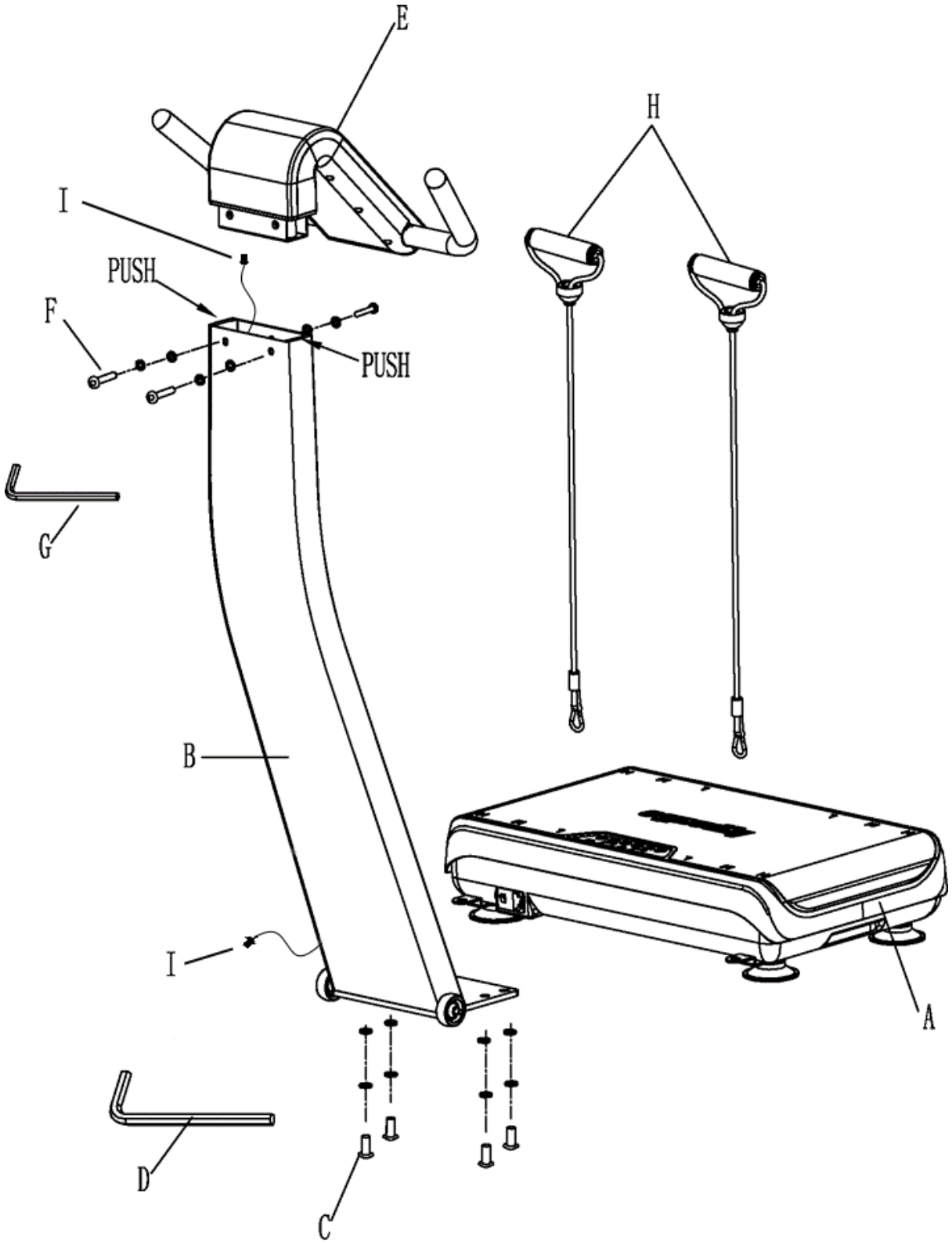
E
H
I
PUSH
F
PUSH
G
B
I
A
D
C

# *Upper body resistance bands*

The G14 Home comes supplied with two upper body resistance bands, which can be attached to the attachment points on the vibration platform and used in a variety of upper body exercises.

To connect the upper body resistance bands to the attachment points on the machine (see Fig. 3), simply squeeze the D clip (1) at the end of the resistance band and guide the clip through the hole in the attachment point (2), then release the D clip.

Each resistance band can be adjusted to increase or decrease the length of the resistance band, which will also have an effect on increasing and decreasing the resistance. To adjust, simply feed the resistance band through the toggle to your requirements.

Note: The upper body resistance bands should only be connected to the machine when they are being used. If they are left connected to the machine and are not in use, they may create excessive noise.

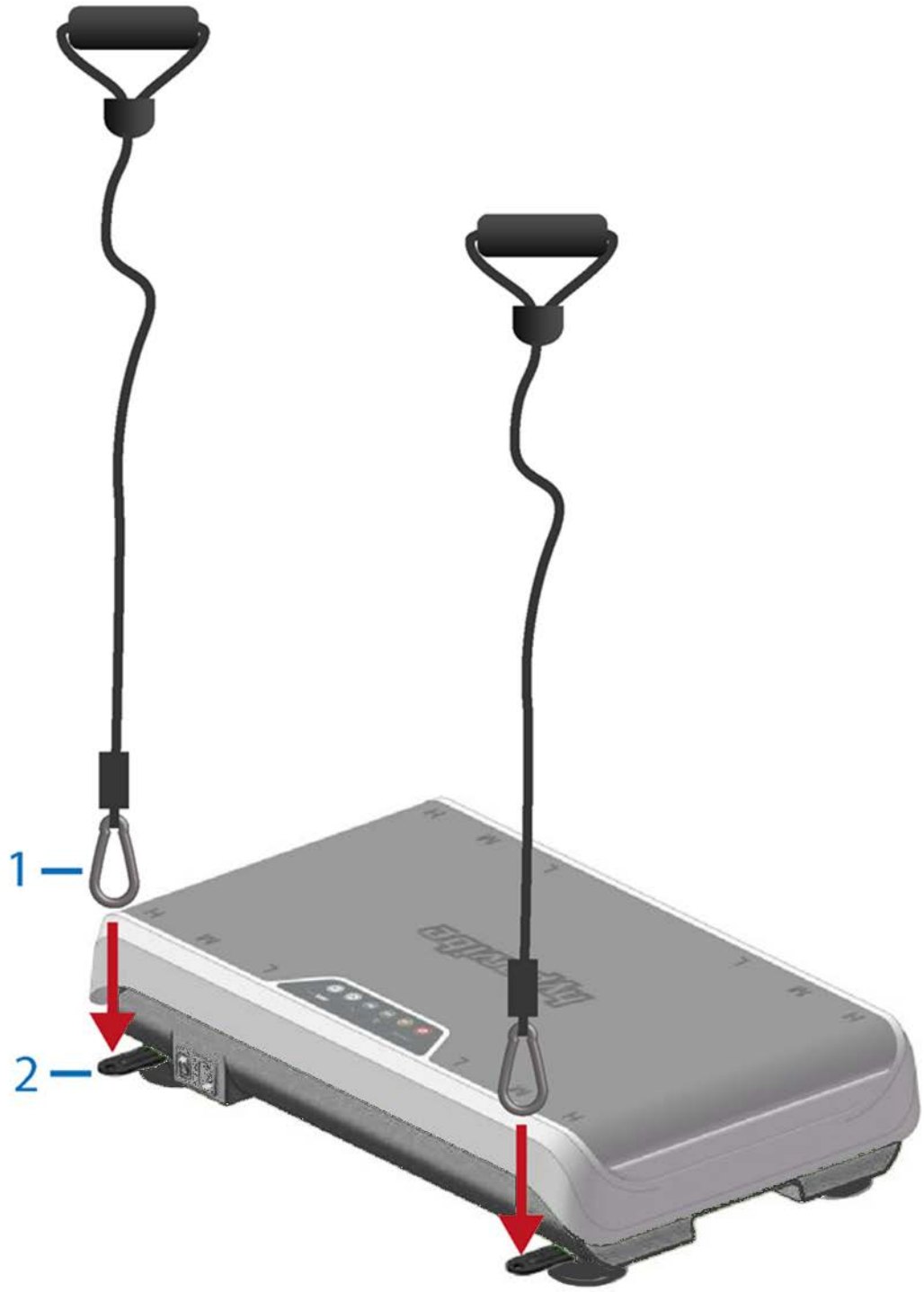


Fig. 3

# *Safe & Effective Use*

If you are not excluded from using the machine due to a health condition, the G14 Home can be used by almost everyone. How- ever, the key to success when using the G14 Home is safe and effective use. There are three main variables that will determine safe and effective use:

1. Intensity (G-Force)
2. Time
3. Exercise

## Intensity (G-Force)

The G14 Home can be adjusted through a wide range of intensity levels, from very low intensity (low frequency with low amplitude) to high (high frequency with high amplitude). Intensity levels should be chosen appropriately based on personal ability and lev- el of conditioning.

The G14 Home has a frequency range from 5 to 20Hz, and three amplitude positions, L (Low), M (Medium), & H (High). Frequency refers to the speed of the platform and can be adjusted at the control panel in manual mode. Amplitude refers to the distance the platform travels up and down and can be adjusted by moving your feet/hands between the L, M & H amplitude contact positions on the platform **(See Fig.4)**. When connected to the Hypervibe G14 app, the combined frequency and amplitude settings determine the intensity level, and the G14 Home displays the intensity levels at the top of the screen via

the G Force panel. As a general rule, beginners should stay below 4g's.

## Time

Fig. 4

When referring to time on the G14 Home, we can refer to the duration of time that an exercise is performed for, the duration of time you rest between exercises, and also the total time use of machine in any given week in terms of number of sessions.

Just as we recommend low intensity vibration when new to GRT, we also recommend short exercise durations and fewer sessions per week. As little as 5 minutes, 2 to 3 times per week may be enough stimulation initially, which should allow you to become familiar with the effects of GRT without

overloading your body. If your body adapts well to GRT, longer exercise durations of 10-20 mins in total are possible, and it is also possible to use the machine every day. Allow adequate rest durations between exercises. Reducing the rest periods will contribute to the intensity of the session.

It should also be noted that programs that are designed for relaxation or flexibility are generally very low intensity and can be used in addition to a GRT program or used as an off-day program.

## Exercise

It is important you only choose to perform exercises which are ap- propriate for your ability, and likewise performing those exercises correctly, as incorrect posture can cause harm and injury. Switching on your core muscles by drawing your belly towards your spine, will increase core stability and help maintain your posture.

It is important to maintain balance during exercises. For exercises which use the handles of the machine for stability, the aim is to be able to perform the exercise with minimal pressure on the handles as possible. Your body should be positioned so that if you were to let go of the handles, you would not lose balance.

Unless otherwise instructed, your weight should be distributed evenly through your feet left to right, and front to back. You should not be up on your toes, nor back on your heels.

You should never stand up tall and lock your knees during a high intensity GRT machine setting.

Sometimes locked knees may be instructed for lower intensity vibration therapy exercises.

The G14 Home has a pivotal platform, which means the platform vibrates in the same motion as a see-saw. For standing exercises where both feet are on the platform your feet should be kept at equal distance from the middle platform pivotal point.

There are some exercises where should use the Hypervibe Step Mat or similar product, such as kneeling, planking, and sitting exercises. Some users will prefer a mat for upper body exercises where hands are on the platform but be aware that this will also reduce the intensity to a degree. You may also wish to use the Hypervibe workout mat when lying on the floor in front for your comfort and protection.

For safety and maximum vibration transfer to the body, wear socks or thin-soled rubber shoes. Bare feet or hands on the platform be the most efficient transfer of vibration but can cause blistering. Thicker soled shoes will absorb vibration and reduce the amount of vibration transferred to the body, and hard soled shoes can cause the user to “skid”.

# Using the Control panel

Please refer to supplementary software guide available on our site for download.

# Getting started

If you have never used a vibration machine before, we recommend you begin using the G14 Home by starting with one of the introduction programs shown in the G14 Home App.
Otherwise, we suggest you choose a program that is best suited to the goals you wish to achieve. Using the G14 Home app does provide a huge advantage. The built in instructional videos will show you the correct way to perform each exercise. More advanced users may wish to use manual mode and create their own exercise routine.

# Maintenance

The G14 Home is built to withstand home use, However, as the owner, you are responsible for cleaning and maintaining the unit's integrity. If you fail to maintain the G14 Home as described below, it could affect or void the G14 Home limited warranty.

! DANGER: To reduce the risk of electrical shock, always unplug the unit from its power source before cleaning it or performing any maintenance tasks.

! WARNING: The G14 Home does not contain any user-serviceable parts. Any changes, modifications or unauthorized maintenance performed to or on the machine could void the product warranty.

Check that the power lead is firmly pushed into the socket before each use.

Vacuum the floor underneath the unit every week to prevent the accumulation of dust and dirt.

Clean the machine only with soft brush or clean moist cloth using a diluted solution of mild soap and water only.

! CAUTION: Never pour water or spray liquids directly onto the machine. Allow the machine to dry completely before using.

# *Specifications*

Platform Size (mm/in):

655/25.8 (w) x 395/15.5 (d)

Machine Size (mm/in):

655/25.8 (w) x 395/15.5 (d) x 150/6 (h)

Net weight (Kg/lbs.): 46/101

Motor Power: 300W

Vibration frequency: 5-30Hz (adjustable in 1Hz increments)

Vibration amplitude: 8mm maximum (peak to peak)

Vibration acceleration: 14g maximum

Maximum user weight (Kg/lbs.): 140/301

# Troubleshooting

| PROBLEM | SOLUTION |
|---|---|
| *There is no power to the LCD display.* | Check the power lead is pushed firmly into power socket at rear of machine.<br>Turn the power off and then back on again at the main power switch<br>If there is no light at the power switch on the rear of the ma- chine, change the fuse (spare fuse is supplied inside fuse holder in mains socket). |
| *The machine is moving on the floor at higher frequency.* | Ensure the machine is on a firm stable surface.<br>Install the machine onto the docking plate. |
| *The platform won't move and I can hear the motor running, or there is a squealing sound.* | The internal drive belt may require adjustment, please contact Hypervibe. |

hypervibe
WHOLE BODY VIBRATION

# G14 HOME

# OWNERS MANUAL

Hypervibe
Gravity Health Solutions
www.hypervibe.com

**§ 15.19 Labelling requirements.**
This device complies with part 15 of the FCC Rules. Operation is subject to the following two conditions: (1) This device may not cause harmful interference, and (2) this device must accept any interference received, including interference that may cause undesired operation.

**§ 15.21 Information to user.**
Any Changes or modifications not expressly approved by the party responsible for compliance could void the user's authority to operate the equipment.

**§ 15.105 Information to the user.**
**Note:** This equipment has been tested and found to comply with the limits for a Class B digital device, pursuant to part 15 of the FCC Rules. These limits are designed to provide reasonable protection against harmful interference in a residential installation. This equipment generates uses and can radiate radio frequency energy and, if not installed and used in accordance with the instructions, may cause harmful interference to radio communications. However, there is no guarantee that interference will not occur in a particular installation. If this equipment does cause harmful interference to radio or television reception, which can be determined by turning the equipment off and on, the user is encouraged to try to correct the interference by one or more of the following measures:
-Reorient or relocate the receiving antenna.
-Increase the separation between the equipment and receiver.
-Connect the equipment into an outlet on a circuit different from that to which the receiver is connected.
-Consult the dealer or an experienced radio/TV technician for help.

This equipment complies with FCC radiation exposure limits set forth for an uncontrolled environment. This equipment should be installed and operated with minimum distance 20cm between the radiator & your body.