CPRO 귀중

APPROVAL REPORT
(승인원)

품 명	N01CMAAD-PK1-G100U
적용 모델	
규 격	PCB Mounted Embedded Antenna
CODE-NO	

구분	입 안	심 사	결 정
CPRO			

승인 유효기간	승인일로부터 까지

구분	입 안	심 사	결 정
협력업체			
	부장 / 박성수	이사/ 김영도	사장 / 류대원
	14.Oct.2022.	14.Oct.2022.	14.Oct.2022.

신청회사명	우노텔㈜	TEL	031-703-5191
주소	경기도 성남시 분당구 야탑동 342-1 리더스빌딩 808호		

Coverage.
Performance.
Smart.

Profile Series

N01CMAAD

Airgain Embedded Antenna

Engineering Data Sheet

3611 Valley Centre Drive, Suite 150
San Diego, CA 92130 USA
Tel: +1 760 579 0200
Fax: +1 760 579 0892
Information: info@airgain.com
Sales: sales@airgain.com
Support: support@airgain.com

Revision History (Required)

Revision	Date	Note
3012C-02-00-002-1 Rev 1.0	June 15, 2020	Preliminary Datasheet 1.0
3012C-02-00-002-1 Rev 1.1	August 11,2022	Released

Disclaimers

The information in this document is provided in connection with Airgain Antenna products and is proprietary and confidential. Airgain may make changes at any time, without notice.
Please verify with Airgain before finalizing a product design.

Contents

1. Airgain N01CMAAD Embedded Antenna 4
2. Features 4
3. Specifications and Interface 5
4. Radiation Patterns 5
5. Dimensions 7
6. ROHS 7
7. Feature and Options Information 7
7.1 Part Number Conventions 8
7.2 Part Number Example 8
8. Cable Data Sheet 9
9. RELIABILITY TEST 10
9.1 Environment test 10
9.2 Mechanical test 10
10. VSWR Naked Test 11

Figures

Figure 1: Model N01CMAAD Embedded Antenna 4
Figure 2: Model N01CMAAD Measurement axes 5
Figure 3: Model N01CMAAD Radiation Patterns at 2.44 GHz 6
Figure 4: Model N01CMAAD Pre-applied Tape Dimensions 7
Figure 5: N01CMAAD with connector or stripped cable 8

1. Airgain N01CMAAD Embedded Antenna

The Model N01CMAAD Embedded Antenna provides a high efficiency, 2.4GHz band embedded antenna solution for Wi-Fi and ISM band applications, such as WLAN products. As embedded antenna solutions become the focus of next generation wireless product design, the Model N01CMAAD provides the flexibility of an embedded antenna with top performance. The Model N01CMAAD Embedded Antenna is a center fed version of its predecessor, the N01CMAAD, allowing it to fit in spaces where center feeding is better suited. It is designed to accommodate most WLAN access point applications, such as routers and gateways and can be easily integrated into an ID package design.

2. Features

The Airgain N01CMAAD embedded antenna includes the following features:

- IEEE 802.11 /b/g/n/ standards
- Single 2.4GHz Band operation
- Case mount
- 1.4 dBi peak gain @2.44 GHz
- High efficiency
- Quick integration

Figure 1: Model N01CMAAD Embedded Antenna

3. Specifications and Interface

Standard	IEEE 802.11 b/g/n
Frequency range	2.4 to 2.49 GHz
Peak gain	1.4 dBi @2.44 GHz,
VSWR	< 2:1
Feed impedance	50 ohms
Power handling	30 dBm
Interface	50 ohms, 1.13 mm diameter, micro coax cable (available with optional U.FL-compatible cable connector and/or cable-mounted EMI ferrites)
Antenna dimensions	24 x 10 x 0.8 mm
Weight	0.78 g
Temperature range	Operating: -40° C to +75° C (-40° F to +167° F) Storage: -40° C to +85° C (-40° F to +185° F)
Humidity range	0% to 95% non-condensing

4. Radiation Patterns

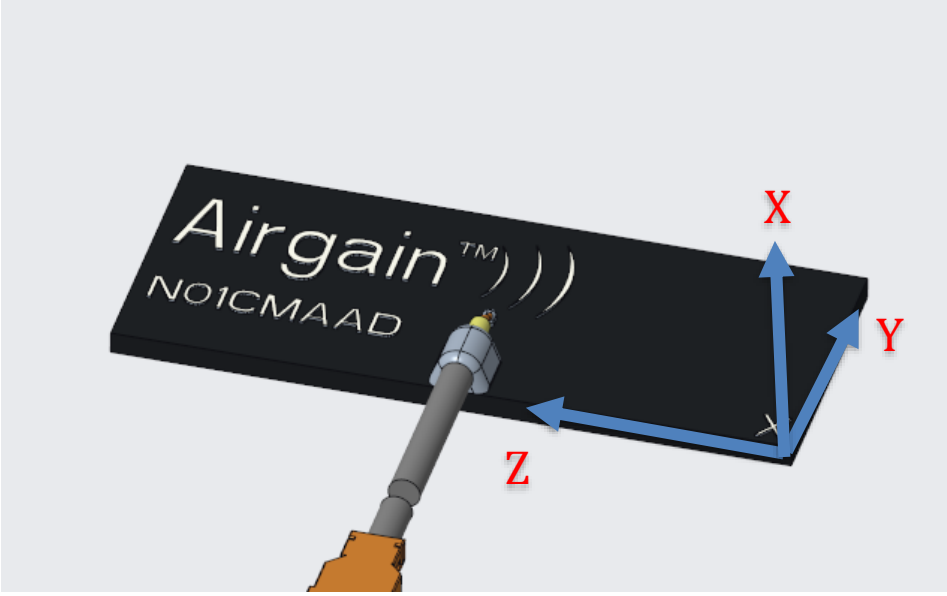

Figure 2: Model N01CMAAD Measurement axes

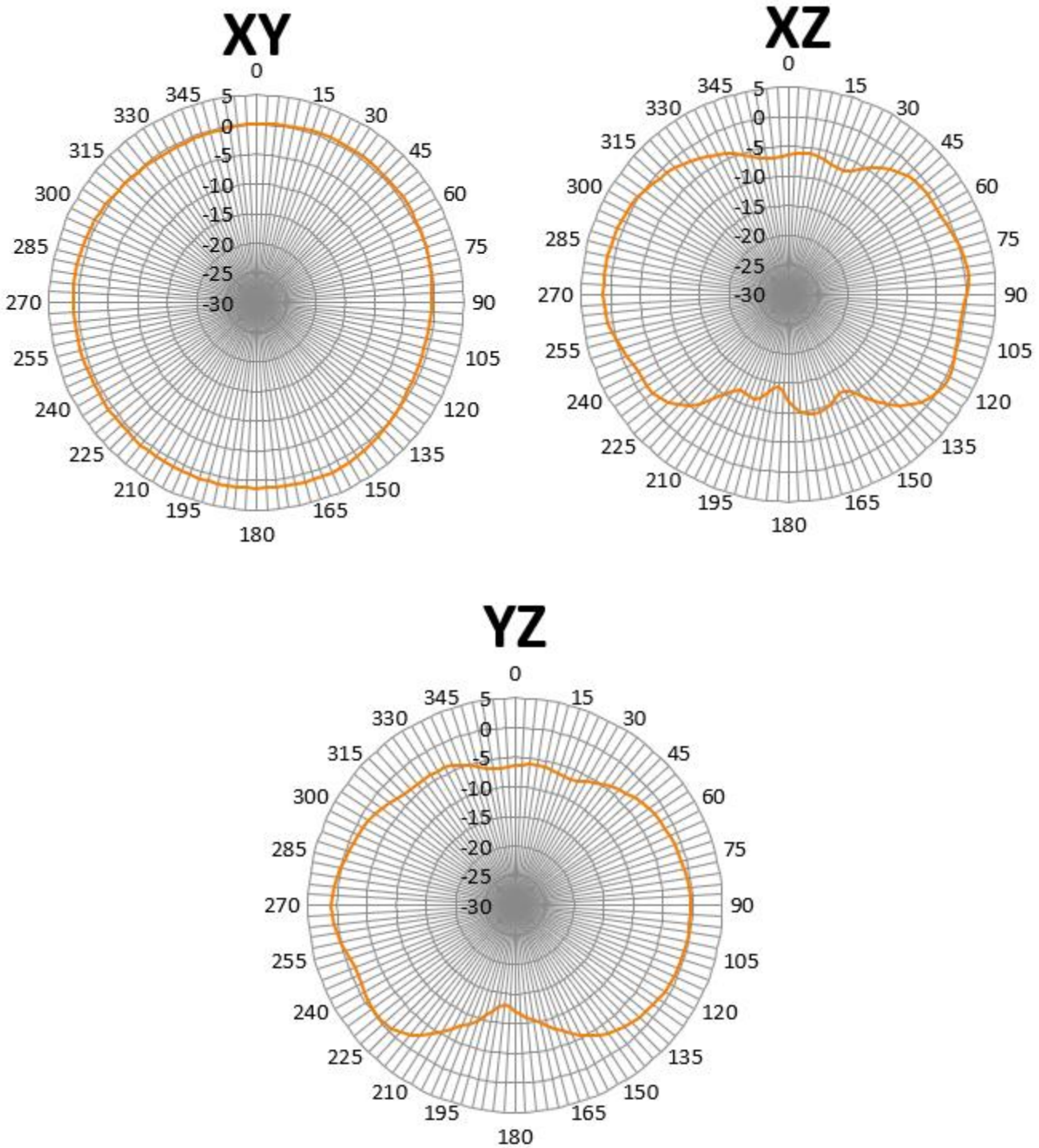

Figure 3: Model N01CMAAD Radiation Patterns at 2.44 GHz

5. Dimensions

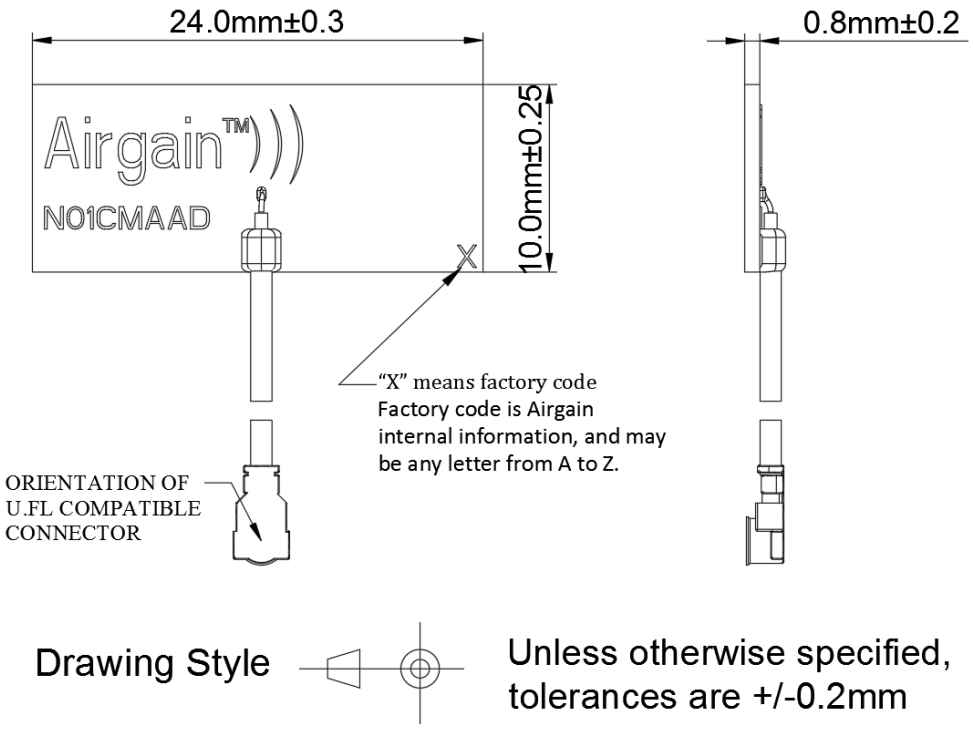

Figure 4: Model N01CMAAD Pre-applied Tape Dimensions

6. ROHS

Airgain N01CMAAD embedded antennas are RoHS compliant.

7. Feature and Options Information

Airgain N01CMAAD antennas are equipped with an RF cable I/O interface. Optional cable termination such as U.FL-compatible micro coax connectors and cable mounted EMI ferrite cores are available. To aid mounting the N01CMAAD, pre-applied, double-sided adhesive tape is available on the N01CMAAD -T Series.

7.1 Part Number Conventions

Airgain uses a three-staged standard number system for our part numbers, which serially define the antenna type, tape type, cable type/length, and connector type/interface, as described below:

Antenna #	Tape type -XX (if required)	Packaging type -xx	Cable Assembly Type –xxxxxx		
			Cable Color –x	Cable length XXX	Connector type XX (if required)
N01CMAAD	Blank = No Tape T = Tape on bottom of element T10 = 1mm thick PE Tape affixed to bottom surface of antenna	PK1= singulated (individual) antennas (PK1 is mandatory)	G = Grey (Standard) B = Black (Non Standard) W = White (Non Standard) A = Blue(Non Standard)	Cable length in millimeters (mm) Sample Lengths*: 65, 100, 130, 150, 190, 230, 250, 300,400	Blank = Stripped Cable U = U.FL connector C = U.FL connector plus Ferrite Core, core size: 3.5mm * 9.0mm * 1.5mm CS = stripped cable plus Ferrite Core, core size: 3.5mm * 9.0mm * 1.5mm UR2 = U.FL compatible connector, rotated 180°

** Standard cable lengths listed in RF Cable Datasheet*

7.2 Part Number Example

N01CMAAD-T-PK1-G100U – N01CMAAD antenna with 1.6-mm double-sided adhesive tape, 100-mm cable, and U.FL-compatible connector.

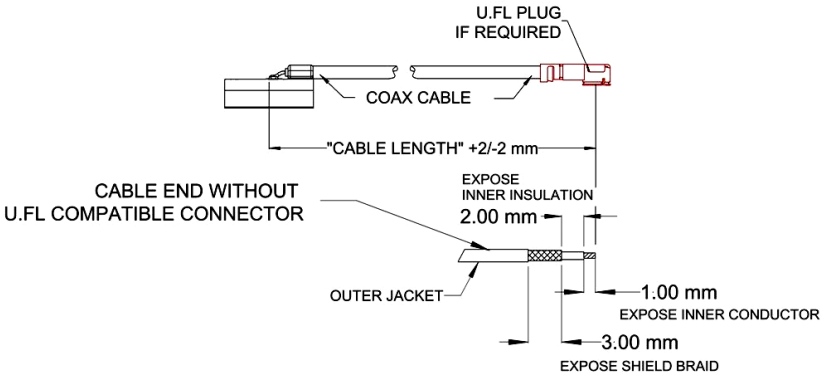

Figure 5: N01CMAAD with connector or stripped cable

8. Cable Data Sheet

Item	Specification	
Cable type	OD1.13	
Impedance	50 ± 3 ohms	
Inner conductor	Material	Tin-coated copper
	Conductor numbers	7
	Conductor size	0.08 mm
	Outer diameter	0.24 ± 0.02 mm
Dielectric layer	Material	FEP
	Color	Clear
	Average thickness	0.22 mm
	Diameter	0.7 ± 0.03 mm
Braid (shielding)	Material	Tin-coated copper
	Conductor size :total / O.D. of every wire(mm)	16*4/0.05 mm
	Coverage	90%± 5%
	Diameter	0.92 ± 0.05 mm
Outer cover	Material	FEP
	Color	Black / white / grey / blue
	Average thickness	0.10 mm
	Diameter	1.13 ± 0.05 mm
VSWR testing	< 1.3@0~6GHz	
Attenuation (dB/1meter)	1GHz	≤2.2
	2GHz	≤3.1
	3GHz	≤3.8
	4GHz	≤4.4
	5GHz	≤4.9
	6GHz	≤5.4
Operating temperature	-55℃~+150℃	

9. RELIABILITY TEST

9.1 Environment test

ITEM	TEST CONDITION	LIMIT
Low & High Temperature Storage Test	1）Power off the DUT; 2）Put DUT in a chamber ; 3）Decrease the temperature to -40℃ in 65minutes and hold for 6 minutes; 4）Increase the temperature to 70℃/95%RH in 75 minutes and hold for 6 minutes; 5）Increase the temperature to 85℃/80%RH in 15 minutes and hold for 6 minutes; 6）Decrease the temperature to 25℃ in 45 minutes; 7）Perform 50cycles of test (1 cycle is the time elapsing from step 3 to 6); 8）Visual inspect.	*After the test, there are no obvious change on the surface of the samples. *specimen sheet meet the electrical specification
Salt Spray	1. Brine concentration: 5±0.5% (measured by hydrometer) 2. The PH value of the salt solution is between 6.5 and 7.2 (35±2℃). 3. The temperature in the laboratory (refers to the temperature in the box) is 35±2℃, and the humidity is greater than 95%; 4. The temperature in the saturated pressure barrel is 47±1℃. 5. Spray volume is 1.0 ~ 2.0mL per hour 6.The nozzle pressure is 78.5 ~ 137.3 KPa(0.8 ~ 1.4 KGF /cm2) Duration :48 hours Judgment:there was no abnormal appearance after the test, and the change of performance before and after the VSWR experiment was within +0.2/-0.5	*After the test, there are no obvious change on the surface of the samples. *specimen sheet meet the electrical specification

9.2 Mechanical test

ITEM	TEST CONDITION	LIMIT
Drop test	1. Antenna N01CMAAD mounted on a 150x80x55mm ABS Plastic case's side wall with the tape 2.The DUT is dropped four times, once each on the four case side wall corners, through a distance of 1.5m vertically, onto a concrete floor, overlaid with commercial grade, hard vinyl floor tiles	After the test, specimen sheet meet the electrical specification

10. VSWR Naked Test

VSWR for the Model N01CMAAD were taken with the antenna mounted on network analyzer without anything.

Sample	RETURNLOSS Standard : 2.65-2.75GHz, RL≤-10			VSWR Standard : 2.65-2.75GHz, VSWR≤2.0			Decide
	2.65GHz	2.75GHz	Max in frequency	2.65GHz	2.75GHz	Max in frequency	
1	-12.96	-17.30	-12.96	1.58	1.32	1.58	PASS
2	-13.47	-16.88	-13.47	1.54	1.34	1.54	PASS
3	-14.52	-14.63	-14.52	1.46	1.46	1.46	PASS
4	-13.41	-16.32	-13.41	1.54	1.36	1.54	PASS
5	-12.86	-17.22	-12.86	1.58	1.31	1.58	PASS
6	-13.84	-15.11	-13.84	1.66	1.31	1.66	PASS
7	-12.24	-17.82	-12.24	1.65	1.30	1.65	PASS
8	-14.96	-14.08	-14.08	1.43	1.49	1.49	PASS
9	-14.59	-14.73	-14.59	1.46	1.45	1.46	PASS
10	-14.74	-14.77	-14.74	1.45	1.45	1.45	PASS

REV	DESCRIPTION	BY	DATE
A	Initial Design	BWU	8/AUG/2022

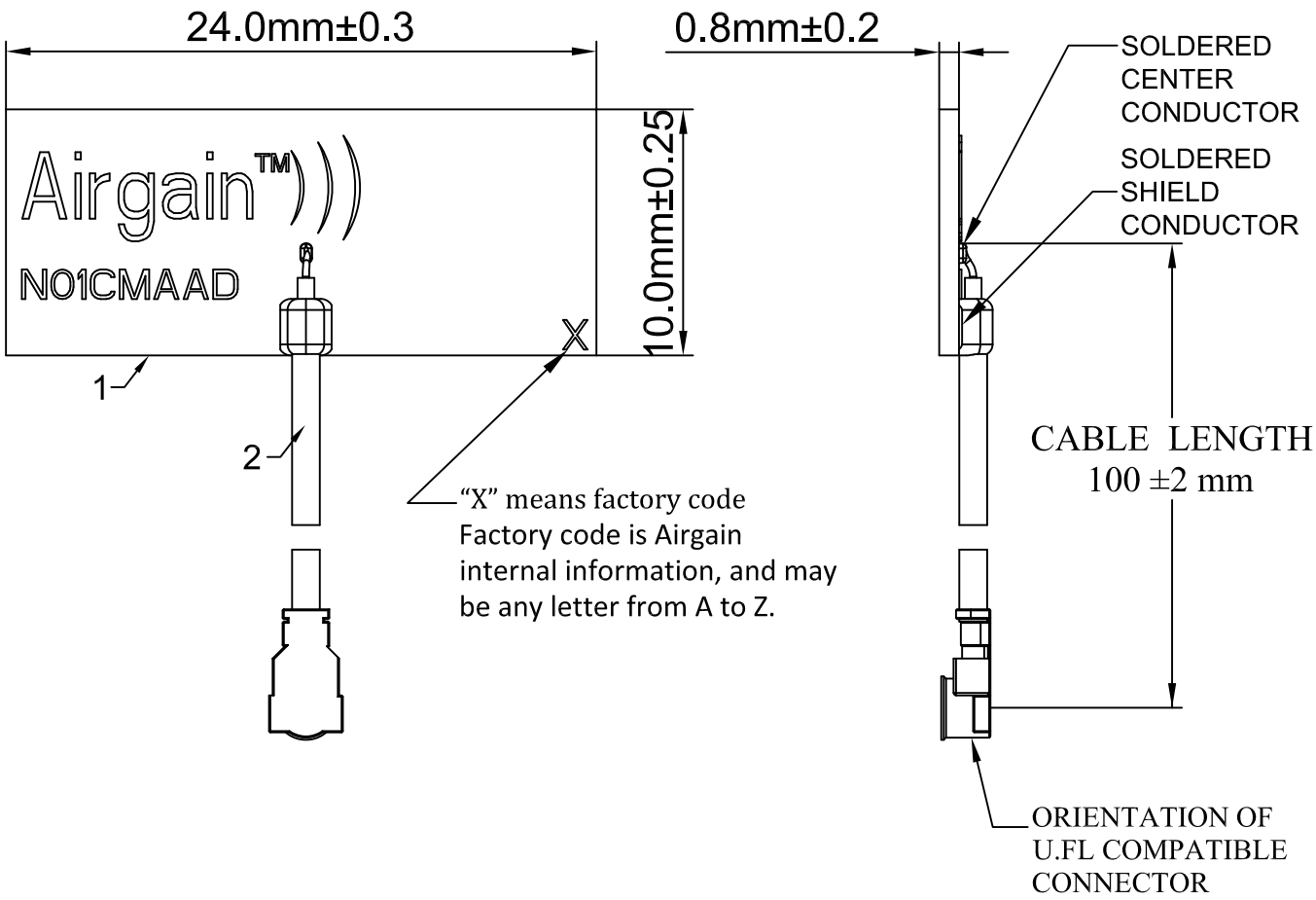

Notes:
The processes used to assemble this antenna shall comply with the following specifications ,unless otherwise specified.
1.Solder:use lead free solder if applies for lead free soldering process to assemble the antenna , unless otherwise specified.
2.Bom:use the bom file for assembling the antenna.this table is provided for reference only.
3.Unless otherwise specified dimension, tolerances are +/-0.2mm,tape's tolerances are +/-0.5mm
4.Packaging type: PE bag packing.

ITEM#	DESIGNATOR	QUANTITY	NOTE
1	Antenna	1	
2	Coax Cable	1	1.13mm OD, Grey RF Cable

DRAWING STYLE

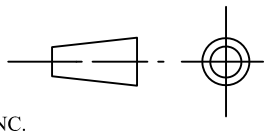

BOM No. 3012C-06-00-001-1	3611 Valley Centre Drive, Suite 150 San Diego, CA 92130 USA Airgain™		
PCB No. 3012C-12-00-001-1	Project PROFILE EMBEDDED ANTENNA		
Drawn by BWU Date 8/AUG/2022	Title N01CMAAD-PK1-PB-G100U		
Checked by Date	Size B	Number 3012C-07-02-001-3	Rev. A
Approved by Date	Layer	Scale	
	File	Sheet 1 of 1	

THIS DOCUMENT IS PROPRIETARY AND CONFIDENTIAL PROPERTY OF AIRGAIN INC.

端子图纸

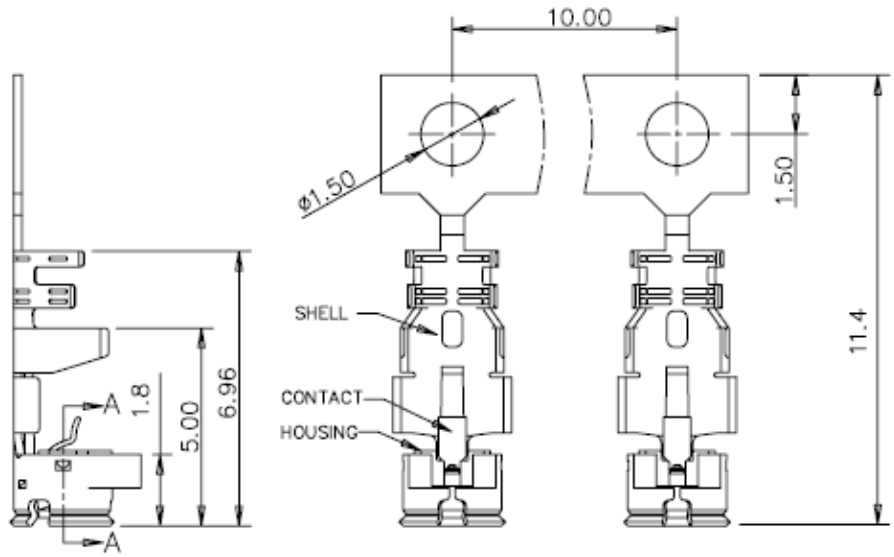

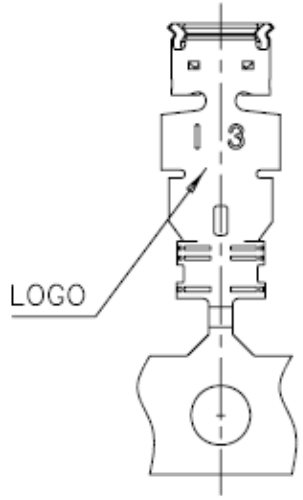

NOTES:

1. VOLTAGE RATING: 50V AC/DC
2. INSULATION RESISTANCE: 100 MEGOHMS Min.
3. DIELECTRIC WITHSTANDING VOLTAGE : 200V AC/Minute
4. VSWR : 1.5Max AT 6GHz
5. IMPEDANCE: 50±5 OHMS
6. CABLE RETENTION FORCE:1.5Kgf MIN.
7. SALTY SPRAY TEST 48 HOURS, NO ANY COSMETIC CHANGE AND RF PERFORMANCE STILL OK.
8. HARMFUL MATERIAL CONTROL FOLLOW RoHS COMPLIANT.

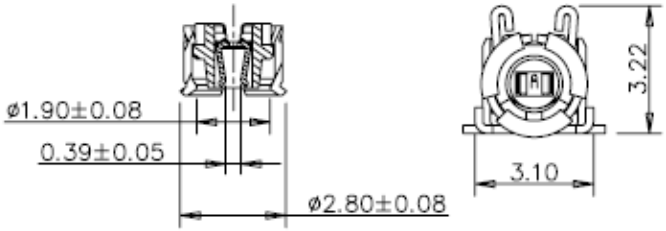

SECTION A–A

NO	NAME	MATERIAL	DESCRIBTION
3	SHELL	COPPER ALLOY	G/F PLATED OVER Ni
2	CONTACT	COPPER ALLOY	2u" GOLD PLATED OVER Ni
1	HOUSING	PA66	BLACK

TOLERANCE(UNLESS SPECIFIED)		UNITS mm
0.±1	0.°±4°	MAT'L
.0± 0.2	.0°±2.0°	SEE NOTES
.00± 0.15	.00°±	FINISH
.000±	.000°±	
		Q'TY

NAME(INTENDED USE) COSTOMER	Jingcheng Electronics Co., Ltd
PART NO.: 204–08	TITLE: RF PLUG FOR 1.13 CABLE
APPD: George 2016.2.23	DWG NO.: 101–0000–014
CHKD:	SCALE / SHEET / REV.
DR: YJ.Wu 2016.2.23	NONE / 1/1 / C