RN93xx

Product Technical Specification

FH0003566 - Rev01.03 March 29, 2024

RESTRICTED

ROLLING WIRELESS

RESTRICTED

Author	Rolling Wireless
Date	March 29, 2024
Series	RN93xx
Hardware Compatibility	Product Line
Software Compatibility	All
Document Type	☒ PTS (Product Technical Specification) ☐ APN (Application Note) ☐ TN (Technical Note) ☐ TR (Technical Report)
Content Level	☒ Basic ☐ Intermediate ☐ Advanced
Confidentiality	☐ Public ☐ Internal ☒ Restricted ☐ Confidential

Contents

Contents 2
Legal Notice 3
1 Introduction 5
1.1 Modem Features 5
2 Technical Specifications 6
2.1 Input/output Power Supplies 6
2.2 Environmental 6
2.3 GNSS 7
2.3.1 GNSS Application 7
2.3.2 Recommended GNSS Antenna Specifications 7
2.4 Recommended WWAN Antenna Specifications 9
3 Routing Constraints and Recommendations 11
3.1 Digital Signals Recommendations 11
3.1.1 Routing on Inner Layers 11
3.1.2 Minimize the Crosstalk 11
3.2 RF Routing Recommendations 12
3.3 High-Speed Interface Recommendations 14
3.3.1 USB Routing Recommendations 14
3.3.1.1 USB2 14
3.3.1.2 USB3 14
3.3.2 PCIE Routing Recommendations 15
3.3.3 USXGMII Routing Recommendations 15
3.3.4 SGMII Routing Recommendations 15
3.3.5 RGMII Routing Recommendations 15
3.3.6 SDIO Routing Recommendations 16
3.3.7 High Speed Clocks 16
3.4 Power and Ground Recommendations 16
3.5 Interface Circuit Recommendations 17
4 FCC Statement: 18

Legal Notice

Important Notice

Due to the nature of wireless communications, transmission and reception of data can never be guaranteed. Data may be delayed, corrupted (i.e., have errors) or be totally lost. Although significant delays or losses of data are rare when wireless devices such as the Rolling Wireless modem are used in a normal manner with a well-constructed network, the Rolling Wireless modem should not be used in situations where failure to transmit or receive data could result in damage of any kind to the user or any other party, including but not limited to personal injury, death, or loss of property. Rolling Wireless accepts no responsibility for damages of any kind resulting from delays or errors in data transmitted or received using the Rolling Wireless modem, or for failure of the Rolling Wireless modem to transmit or receive such data.

Safety and Hazards

Do not operate the Rolling Wireless modem in areas where cellular modems are not advised without proper device certifications. These areas include environments where cellular radio can interfere such as explosive atmospheres, medical equipment, or any other equipment which may be susceptible to any form of radio interference. The Rolling Wireless modem can transmit signals that could interfere with this equipment. Do not operate the Rolling Wireless modem in any aircraft, whether the aircraft is on the ground or in flight. In aircraft, the Rolling Wireless modem **MUST BE POWERED OFF**. When operating, the Rolling Wireless modem can transmit signals that could interfere with various onboard systems.

NOTE: Some airlines may permit the use of cellular phones while the aircraft is on the ground and the door is open. Rolling Wireless modems may be used at this time.

The driver or operator of any vehicle should not operate the Rolling Wireless modem while in control of a vehicle. Doing so will detract from the driver or operator's control and operation of that vehicle. In some states and provinces, operating such communications devices while in control of a vehicle is an offence.

Limitations of Liability

This manual is provided "as is". Rolling Wireless makes no warranties of any kind, either expressed or implied, including any implied warranties of merchantability, fitness for a particular purpose, or noninfringement. The recipient of the manual shall endorse all risks arising from its use.
The information in this manual is subject to change without notice and does not represent a commitment on the part of Rolling Wireless. ROLLING WIRELESS AND ITS AFFILIATES SPECIFICALLY DISCLAIM LIABILITY FOR ANY AND ALL DIRECT, INDIRECT, SPECIAL, GENERAL, INCIDENTAL, CONSEQUENTIAL, PUNITIVE OR EXEMPLARY DAMAGES INCLUDING, BUT NOT LIMITED TO, LOSS OF PROFITS OR REVENUE OR ANTICIPATED PROFITS OR REVENUE ARISING OUT OF THE USE OR

INABILITY TO USE ANY ROLLING WIRELESS PRODUCT, EVEN IF ROLLING WIRELESS AND/OR ITS AFFILIATES HAS BEEN ADVISED OF THE POSSIBILITY OF SUCH DAMAGES OR THEY ARE FORESEEABLE OR FOR CLAIMS BY ANY THIRD PARTY.
Notwithstanding the foregoing, in no event shall Rolling Wireless and/or its affiliates aggregate liability arising under or in connection with the Rolling Wireless product, regardless of the number of events, occurrences, or claims giving rise to liability, be in excess of the price paid by the purchaser for the Rolling Wireless product.

Intellectual Property

This product may contain technology developed by or for Rolling Wireless S.à.R.L. and its affiliates.
This product includes technology licensed from QUALCOMM®.

Copyright

© 2024 Rolling Wireless. All rights reserved.

Trademarks

Sierra Wireless®, AirPrime®, AirVantage®, and the Legato and Open AT logos are registered trademarks of Sierra Wireless Inc. or one of its subsidiaries, used under license.
Watcher® is a registered trademark of NETGEAR Inc., used under license.
Windows® and Windows Vista® are registered trademarks of Microsoft Corporation.
Macintosh® and Mac OS X® are registered trademarks of Apple Inc., registered in the U.S. and other countries.
QUALCOMM® is a registered trademark of QUALCOMM Incorporated. Used under license.
Other trademarks which are herein used and not mentioned above are the property of their respective owners.

Contact Information

Sales information and technical support, including warranty and returns	Web: https://www.rollingwireless.com/en/support
Corporate and product information	Web: https://www.rollingwireless.com/

1 Introduction

1.1 Modem Features

- Legacy radio access technologies – 4G LTE, 3G (HSDPA, HSUPA, HSPA+, and DC-HSPA+ / WCDMA), 2G (GSM/GPRS/EDGE)
- 5G NR Sub-6 3GPP R16 NSA/SA FDD/TDD[1]
- 5G NR Option 2 for SA and Option 3/3x for NSA EN-DC
- Dynamic Spectrum Sharing (DSS) –5G NR and LTE FDD bands
- PAN eCall
- Emergency calls (E911/E112) over LTE/NR
- VoLTE and VoNR
- SMS over IMS (LTE or NR) / SGs
- Up to 12 PDN support, 4/12 can support IPA
- Support embedded Data calls or USB tethering data calls with IPv4 and IPv6 dual stack
- SIM application tool kit with proactive SIM commands
- Traditional modem COM port support for AT commands
- Power saving modes for minimum idle power draw
- C-V2X R15 over PC5[2]
- MF-GNSS (L1/L5)
- Concurrent GNSS constellations: GPS, Galileo, Beidou, QZSS
- Assisted GNSS: GPS OneXtra, SUPL and A-GPS via Control Plane (US e911)

NOTE: FDD NSA EN-DC is not supported.

RESTRICTED

2 Technical Specifications

2.1 Input/output Power Supplies

Table 2-1 Input Power Supplies Requirements

SPECIFICATION	MIN	TYP	MAX	UNIT
Voltage range	3.4	4.0	4.2	V

2.2 Environmental

The RN93xx module complies with the environmental specifications in Table 3-1. Final product conformance to these specifications depends on the OEM device implementation.

Table 2-2 Environmental Specifications

PARAMETER	MODE	DETAILS
Operating Temperature	-40ºC to +85ºC	

RESTRICTED

2.3 GNSS

2.3.1 GNSS Application

RN93xA/B has GNSS LNA build-in and the detailed block diagram is as below. The typical gain between GNSS_ANT1/GNSS_ANT2 input and GNSS_OUT_ANT is 9dB. The GNSS_OUT_ANT can be regarded as another GNSS processor input if having one additional GNSS processor on the customer board.

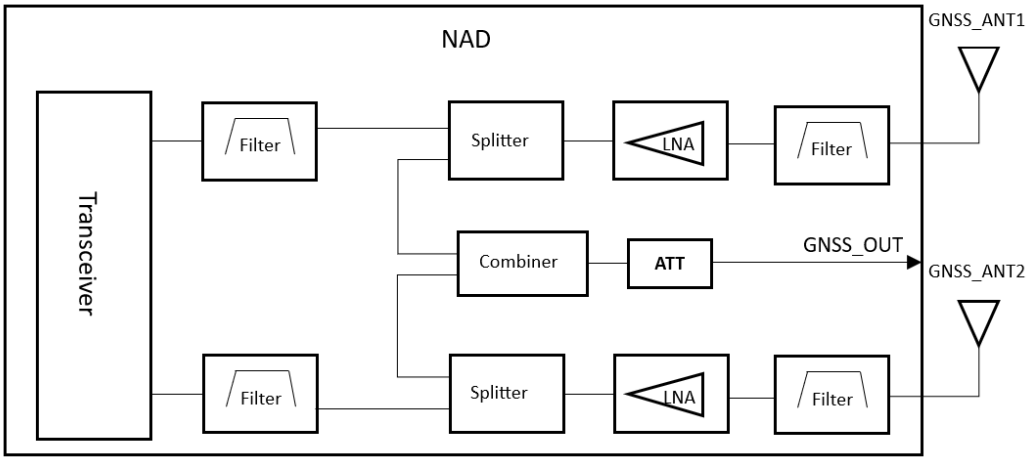

Figure 2-1 RN93xA/B GNSS Block Diagram

RN93xR/N don't have GNSS LNA build-in and the detailed block diagram is as below. The active antenna is a must for RN93xR/N due to no GNSS LNA build-in. GNSS_ANT1 supports both GNSS L1 and GNSS L2/5 by default. GNSS_ANT2 is not used by default.

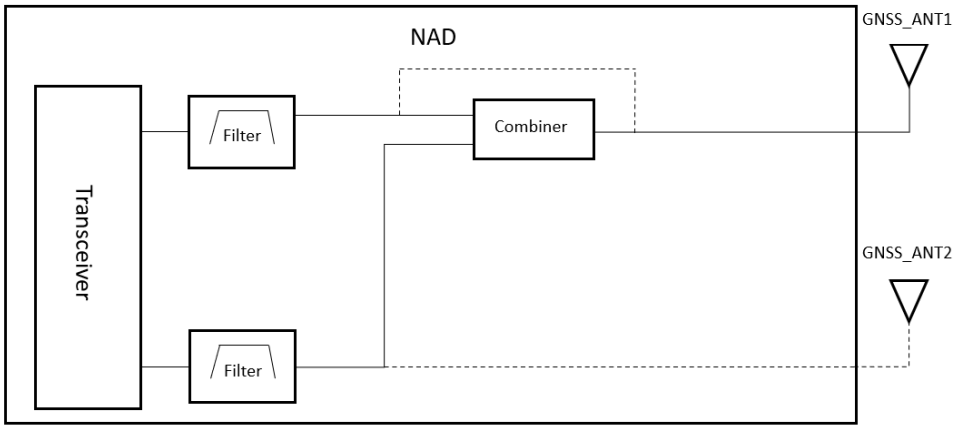

Figure 2-2 RN93xR/N GNSS Block Diagram

2.3.2 Recommended GNSS Antenna Specifications

Table 2-3 GNSS Passive Antenna Requirements (RN93xA/B)

CAUTION: To be updated in the future.

PARAMETER	REQUIREMENTS
Frequency Range	GPS L1/ BDS B1/GLO G1/GALE1: 1559 MHz to 1610MHz (~50 MHz) L5/E5/B2a: 1164 MHz to 1215 MHz (~ 50 MHz)
Isolation between GNSS and WWAN_ANT1	>15dB
VSWR	<=2:1

Table 2-4 GNSS Active Antenna Requirements (RN93xR/N)

The table below defines the key characteristics to consider for the GNSS Active antenna. The pre-SAW is strongly suggested to be added between the antenna and GNSS LNA for better out-of-band rejection into the whole active antenna system.

PARAMETER	REQUIREMENTS
Frequency range	GPS L1/ BDS B1/GLO G1/GALE1: 1559 MHz to 1610MHz (~50 MHz) L5/E5/B2a: 1164 MHz to 1215 MHz (~ 50 MHz)
Isolation between GNSS and Ant1	> 15 dB in all uplink bands
Maximum Voltage applied to the antenna	30 Volts
Antenna System Gain (Antenna + SAW filter + LNA + Cable + Attenuation Network)	14-17 dB
VSWR	<=2:1

Table 2-5 GNSS Pre-SAW Rejection Requirements

SAW FILTER REJECTION REQUIREMENTS		NOTES
777MHz-798MHz	>50dB	65dB required if B13 exists[1]
814MHz-915MHz	>40dB	50dB is preferred
925MHz-960MHz	>30dB	50dB is preferred
1427MHz-1463MHz	>35dB	Ensure the out of band suppression is enough
1710MHz-1785MHz	>35dB	
1850MHz-1980MHz	>40dB	
2010MHz-2025MHz	>40dB	
2305MHz-2315MHz	>40dB	
2401MHz-2483MHz	>40dB	

SAW FILTER REJECTION REQUIREMENTS		NOTES
2500MHz-2570MHz	>35dB	

1. The out of band rejection includes the prefilter (only needed if the B13 exists), the unbalanced SAW filter, and the external LNA.

NOTE: RN93xA/B has GNSS LNA built-in and is required to use a passive antenna for both GNSS L1 and L5. When an active antenna is used, the customer must make sure the total gain between the RN93xA/B GNSS antenna port and the active antenna doesn't exceed 0dB. This means the attenuation network must be added after the active antenna.

2.4 Recommended WWAN Antenna Specifications

Table 2-6 Antenna Requirements[1]

PARAMETER	REQUIREMENTS	COMMENTS
Antenna System	External multi-band antenna system (WWAN_ANT1/WWAN_ANT2/WWAN_ANT3/WWAN_ANT4)	
Operating Bands	All supporting Tx and Rx frequency bands.	
VSWR of Antennas	< 2:1	On all bands including band edges
Total Radiated Efficiency	> 50% on all bands.	Includes mismatch losses, losses in the matching circuit, and antenna losses, excluding cable loss. Rolling Wireless recommends using antenna efficiency as the primary parameter for evaluating the antenna system. Peak gain is not a good indication of antenna performance when integrated with a host device (the antenna does not provide omni-directional gain patterns). Peak gain can be affected by antenna size, location, design type, etc. — the antenna gains patterns remain fixed unless one or more of these parameters change.
Maximum Antenna Gain	Must not exceed antenna gains due to RF exposure and ERP/EIRP limits, as listed in the module's FCC grant.	Refer to the Important Compliance Information for the United States and Canada section.
Isolation	*TBD*	If antennas can be moved, test all positions for both antennas.

PARAMETER	REQUIREMENTS	COMMENTS
		Make sure all other wireless devices (Bluetooth or WLAN antennas, etc.) are turned OFF to avoid interference.
Power Handling	>2W	Measure power endurance over 4 hours (estimated talk time) using a 2 W CW signal — set the CW test signal frequency to the middle of each supporting Tx band. Visually inspect the device to ensure there is no damage to the antenna structure and matching components. VSWR/TIS/TRP measurements taken before and after this test must show similar results.

1. These worst-case VSWR figures for the transmitter bands may not guarantee RSE levels to be within regulatory limits. RN93xx module alone meets all regulatory emissions limits when tested into a cabled (conducted) 50Ω system and radiated spurious emissions with the antenna in our development kit. The antenna system may need to be tuned in order to meet the RSE limits as the complex match between the module and antenna can cause unwanted levels of emissions. Tuning may include antenna pattern changes, phase/delay adjustment, and passive component matching. Examples of the application test limits would be included in FCC Part 22, Part 24 and Part 27, test case 4.2.2 for WCDMA (ETSI EN 301 908-1), where applicable.

RESTRICTED

3 Routing Constraints and Recommendations

Layout and routing of the RN93xx device in the application are critical to maintaining the performance of the radio. The following sections provide guidance to the developer when designing their application to include an RN93xx device and achieve optimal system performance.

3.1 Digital Signals Recommendations

3.1.1 Routing on Inner Layers

When routed in outer layers, digital signals can be a source of noise affecting highly sensitive receivers. They also can generate unwanted harmonic emissions (spurious) if subjected to an incident or reflected radiated waves from on-board antennas.

To limit the risk of your device being exposed to those problems, avoid routing any digital signals on the outer layers. These signals are recommended to be routed on inner layers and surrounded by GND planes evenly punched by GND vias:

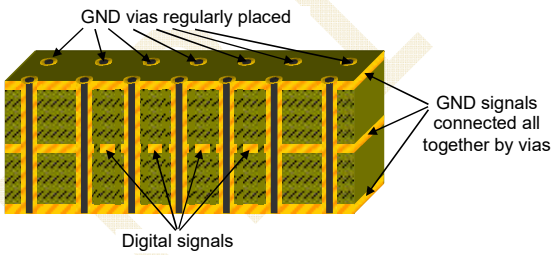

3.1.2 Minimize the Crosstalk

Avoid having parallel and overlapping tracks on adjacent layers. The digital traces on adjacent layers should be routed orthogonally to minimize the crosstalk risk.

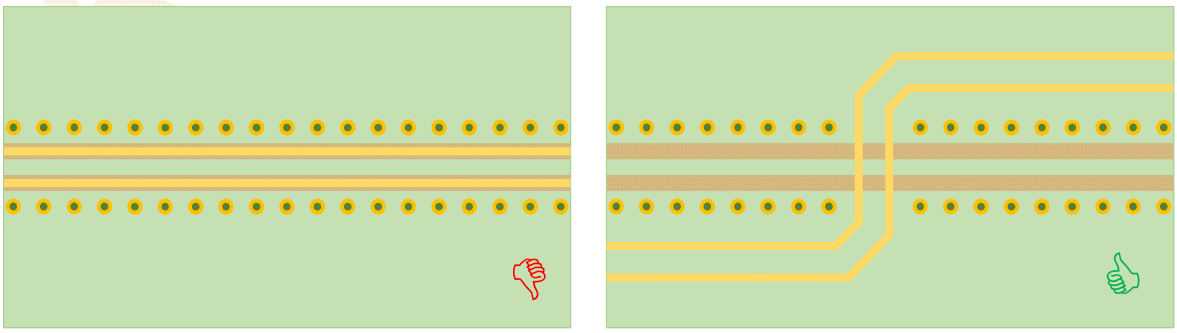

3.2 RF Routing Recommendations

Layout and routing of the RN93xx Series in the application is critical to maintaining the performance of the radio. The following sections provide guidance to the developer when designing their application to include an RN93xx Series and achieve optimal system performance.
To route the RF antenna signals, the following recommendations must be observed for PCB layout:
The RF signals must be routed using traces with a 50 Ω characteristic impedance.
Basically, the characteristic impedance depends on the dielectric constant (εr) of the material used, trace width (W), trace thickness (T), and height (H) between the trace and the reference ground plane.
In order to respect this constraint, Rolling Wireless recommends that a MicroStrip structure be used and trace width be computed with a simulation tool (such as AppCAD, shown in the figure below and available free of charge at http://www.avagotech.com).

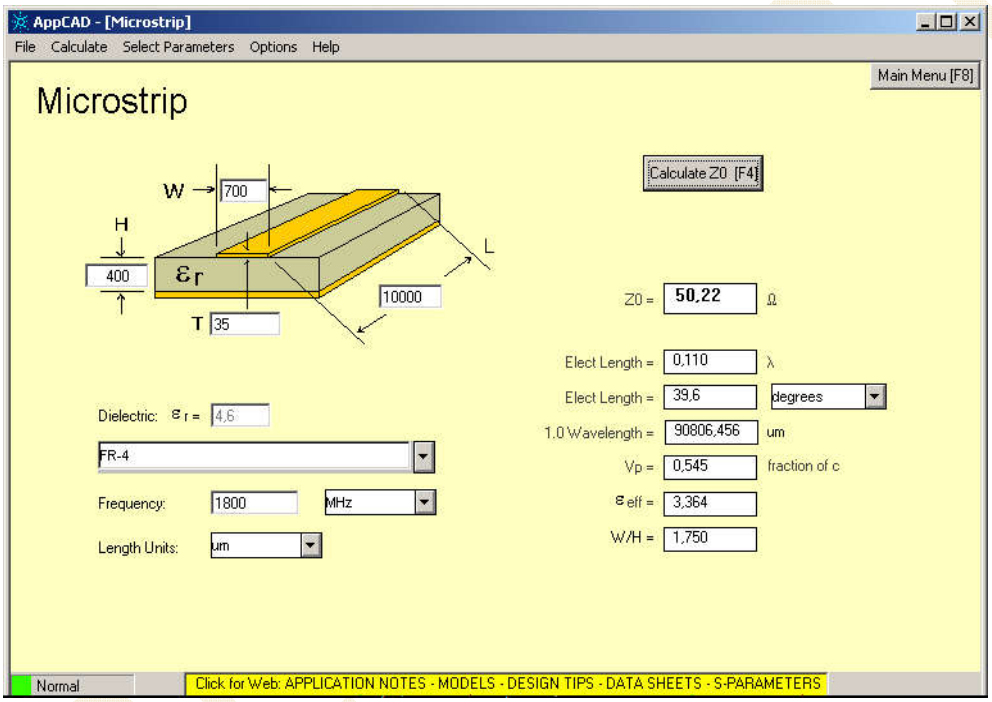

Figure 1. AppCAD Screenshot for Microstrip Design Power Mode Diagram

The trace width should be wide enough to maintain reasonable insertion loss and manufacturing reliability. Cutting out inner layers of ground under the trace will increase the effective substrate height; therefore, increasing the width of the RF trace.

Caution: *It is critical that no other signals (digital, analog, or supply) cross under the RF path. The figure below shows a generic example of good and poor routing techniques.*

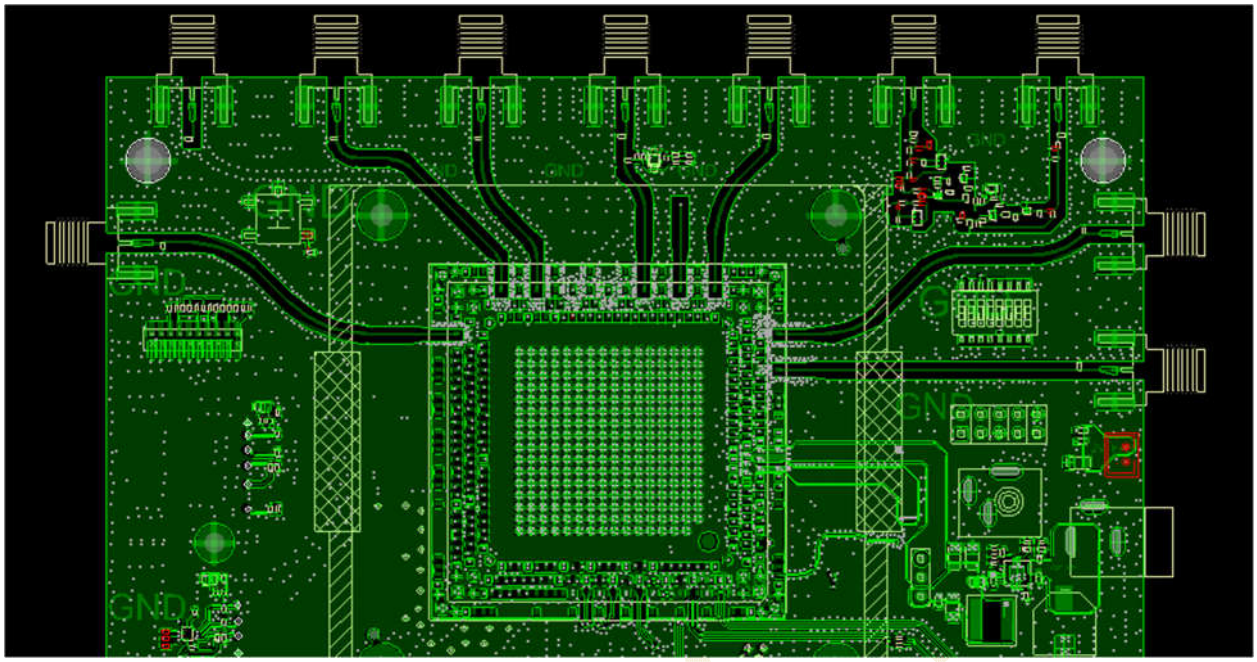

Figure 2. RF Routing Examples

- Fill the area around the RF traces with ground and ground vias to connect inner ground layers for isolation.
- Cut out ground fill under RF signal pads to reduce stray capacitance losses.
- Avoid routing RF traces with sharp corners. A smooth radius is recommended.
  E.g. Use of 45° angles instead of 90°.
- The ground reference plane should be a solid continuous plane under the trace.
- The coplanar clearance (G, below) from the trace to the ground should be at least the trace width (W) and at least twice the height (H). This reduces the parasitic capacitance, which potentially alters the trace impedance and increases the losses.
  E.g. If W = 100 microns then G = 200 microns in an ideal setup. G = 150 microns would also be acceptable is space is limited.

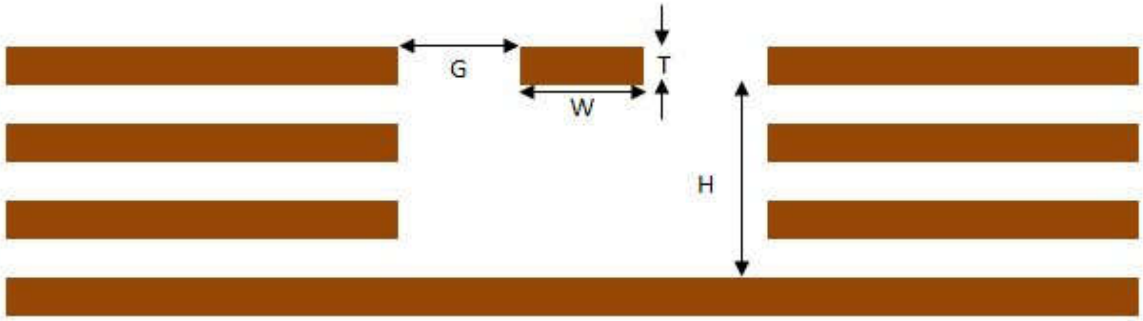

Figure 3. Coplanar Clearance Example

NOTE: *The figure above shows several internal ground layers cut out, which may not be necessary for every application.*

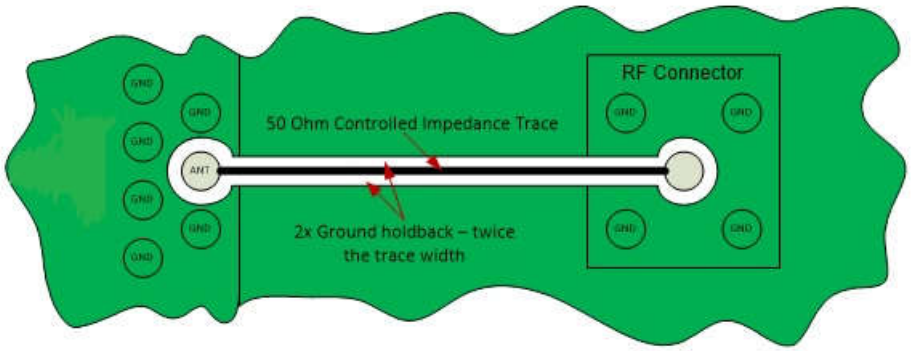

Figure 4. Antenna Microstrip Routing Example

3.3 High-Speed Interface Recommendations

3.3.1 USB Routing Recommendations

3.3.1.1 USB2

High-Speed USB signals (USB_D_P / USB_D_M) are a differential pair and must be routed with the following considerations/constraints:

- 70~110Ω differential trace impedance
- Differential trace length pair matching < 2mm (15 ps)
- Solid GND reference planes
- Trace lengths < 250 mm
- 3x trace width separation to all adjacent signals

3.3.1.2 USB3

Super-Speed USB signals (USB_SSTX / USB_SSRX) are 2 differential pairs and must be routed with the following considerations/constraints:

- 70~110Ω differential trace impedance
- Differential trace length pair matching < 0.7mm (5 ps)
- Solid GND reference planes
- Trace lengths < (TBC) mm
- 4x trace width separation to RX and TX signals
- 4x trace width separation to all adjacent signals

3.3.2 PCIE Routing Recommendations

PCIE signals are very high-speed signals and must be routed with the following considerations/constraints:

- 70~110Ω differential trace impedance,
- Intra pair matching < 0.7 mm (5 ps),
- Inter-lane length match < 2mm,
- Trace lengths < 300 mm,
- 3x line width separation within interface signals and 4x line width separation with a cross interface,
- Solid reference planes.

3.3.3 USXGMII Routing Recommendations

USXGMII signals must be routed with the following considerations/constraints:

- 90~110Ω differential trace impedance
- Intra pair matching < 0.7 mm (5 ps)
- Solid GND reference planes
- Trace lengths < (TBC) mm
- 4x trace width spacing for Tx lane to Rx Lane
- 4x the trace width separation to all adjacent signals

3.3.4 SGMII Routing Recommendations

SGMII signals must be routed with the following considerations/constraints:

- 90~100Ω differential trace impedance
- Intra pair matching < 0.7 mm (5 ps)
- Solid GND reference planes
- Trace lengths < (TBC) mm
- 4x trace width spacing for Tx lane to Rx Lane
- 4x the trace width separation to all adjacent signals

3.3.5 RGMII Routing Recommendations

RGMII signals must be routed with the following considerations/constraints:

- 50Ω single-ended trace impedance
- Length matching < 1.4mm
- Max trace Length < 152 mm
- Solid GND reference planes
- Interconnect loss < 0.85 dB @ 125 MHz
- 1.5x trace width spacing for Tx bus to Rx bus
- 3x the trace width separation to all adjacent signals

3.3.6 SDIO Routing Recommendations

SDIO signals are very high-speed signals and must be routed with the following considerations/constraints:

- 36~50Ω single-ended trace impedance
- CLK to DATA/CMD length matching < 2 mm
- Solid GND reference planes
- Total routing length < 50 mm recommended.
- Bus capacitance < 5 pF
- 1.5x trace width separation to all adjacent signals

3.3.7 High Speed Clocks

I2S_MCLK, TCXO_OUT1 and TCXO_OUT2 are high frequency clocks and must be routed with the following considerations/constraints:

- 50Ω single-ended trace impedance
- Solid GND reference planes
- Total routing length < (TBC) mm recommended.
- (TBC)x trace width separation to all adjacent signals

3.4 Power and Ground Recommendations

Power and ground routing are critical to achieving optimal performance of the RN93xx devices when integrated into an application.
Recommendations:

- Connections to GND from the RN93xx should be flooded plane using thermal reliefs to ensure reliable solder joints.
- VBATT is recommended to be routed as a wide and short trace(s) directly from the power supply to the LGA pad.

RESTRICTED
Rolling Wireless confidential. Only soft copies are controlled. Printed copies of this document are for information purposes only and are uncontrolled. Printed copies are REFERENCE DOCUMENTS after the date of printing.
This document was printed on 15 April 2024.

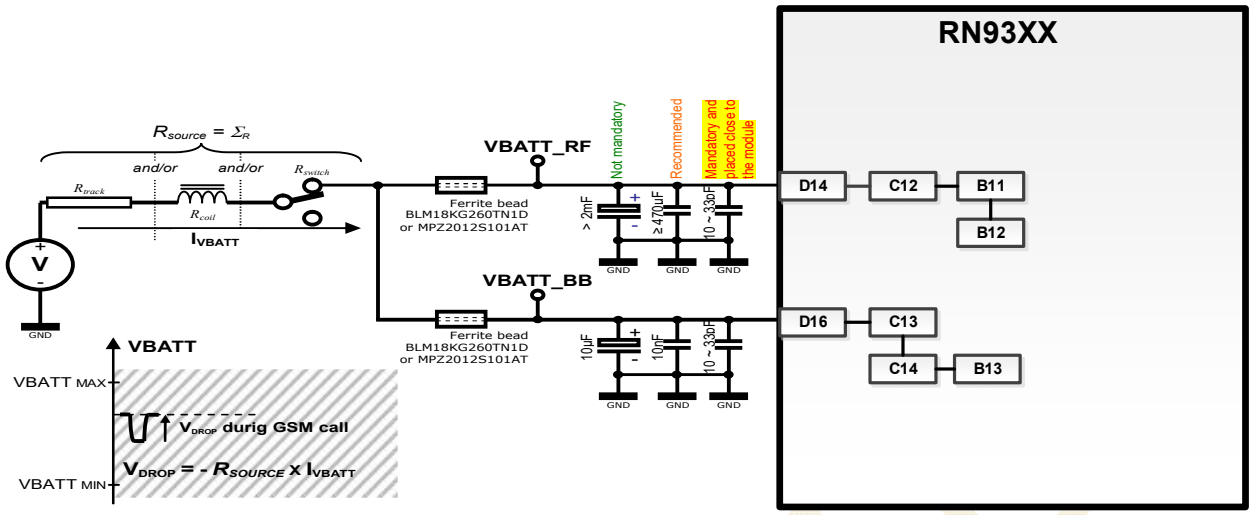

Figure 3-1 Power Recommendation

3.5 Interface Circuit Recommendations

The recommended interface implementation is to use a dual-supply bus transceiver with configurable voltage translation. This allows a host processor operating at a different voltage to communicate with the RN93xx using the appropriate voltage levels.
The figure below is a reference circuit for a digital input/output signal to/from the RN93xx device.

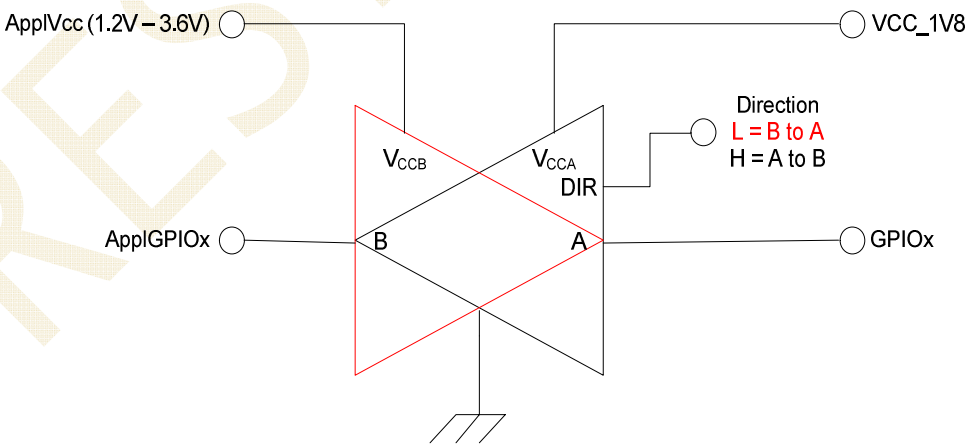

Figure 3-2 RN93xx Interface Reference Circuit

Refer to section 4.1 Pin-out Assignments to identify the appropriate reference voltage and direction of the specific signals.

4 FCC Statement:

OEM/Integrators Installation Manual

Important Notice to OEM integrators

1. This module is limited to OEM installation ONLY.
2. This module is limited to installation in mobile or fixed applications, according to Part 2.1091(b).
3. The separate approval is required for all other operating configurations, including portable configurations with respect to Part 2.1093 and different antenna configurations
4. For FCC Part 15.31 (h) and (k): The host manufacturer is responsible for additional testing to verify compliance as a composite system. When testing the host device for compliance with Part 15 Subpart B, the host manufacturer is required to show compliance with Part 15 Subpart B while the transmitter module(s) are installed and operating. The modules should be transmitting, and the evaluation should confirm that the module's intentional emissions are compliant (i.e., fundamental, and out of band emissions). The host manufacturer must verify that there are no additional unintentional emissions other than what is permitted in Part 15 Subpart B or emissions are complaint with the transmitter(s) rule(s).

The Grantee will provide guidance to the host manufacturer for Part 15 B requirements if needed.

Important Note

notice that any deviation(s) from the defined parameters of the antenna trace, as described by the instructions, require that the host product manufacturer must notify to XXXX that they wish to change the antenna trace design. In this case, a Class II permissive change application is required to be filed by the USI, or the host manufacturer can take responsibility through the change in FCC ID (new application) procedure followed by a Class II permissive change application.

End Product Labelling

When the module is installed in the host device, the FCC label must be visible through a window on the final device or it must be visible when an access panel, door or cover is easily re-moved. If not, a second label must be placed on the outside of the final device that contains the following text: "Contains FCC ID:2AX2URN932N".

The FCC ID can be used only when all FCC compliance requirements are met.

Antenna Installation

(1) The antenna must be installed such that 20 cm is maintained between the antenna and users,
(2) The transmitter module may not be co-located with any other transmitter or antenna.

radiation, maximum antenna gain (including cable loss) must not exceed: Operating Band	FCC Max Antenna Gain (dBi)
WCDMA B2	8.0

WCDMA B4	5.0
WCDMA B5	6.0
LTE B2/2C	8.0
LTE B4	5.0
LTE B5/5B	6.0
LTE B12	5.5
LTE B13	6.0
LTE B14	6.0
LTE B17	5.5
LTE B41/41C	6.5
LTE B66/66B/66C	5.0
LTE B71	5.5
N2	8.0
N5	6.0
N41	6.5
N66	5.0
N71	5.5
N77	3.0
N78	3.0

In the event that these conditions cannot be met (for example certain laptop configurations or co-location with another transmitter), then the FCC authorization is no longer considered valid and the FCC ID cannot be used on the final product. In these circumstances, the OEM integrator will be responsible for re-evaluating the end product (including the transmitter) and obtaining a separate FCC authorization.

Manual Information to the End User

The OEM integrator has to be aware not to provide information to the end user regarding how to install or remove this RF module in the user's manual of the end product which integrates this module. The end user manual shall include all required regulatory information/warning as show in this manual.

Federal Communication Commission Interference Statement

This device complies with Part 15 of the FCC Rules. Operation is subject to the following two conditions: (1) This device may not cause harmful interference, and (2) this device must accept any interference received, including interference that may cause undesired operation.
This equipment has been tested and found to comply with the limits for a Class B digital device, pursuant to Part 15 of the FCC Rules. These limits are designed to provide reasonable protection against harmful interference in a residential installation. This equipment generates, uses and can radiate radio frequency energy and, if not installed and used in accordance with the instructions, may cause harmful interference to radio communications. However, there is no guarantee that interference will not occur in a particular installation. If this equipment does cause harmful interference to radio or television reception, which can be determined by turning the equipment off and on, the user is encouraged to try to correct the interference by one of the following measures:
- Reorient or relocate the receiving antenna.

- Increase the separation between the equipment and receiver.
- Connect the equipment into an outlet on a circuit different from that to which the receiver is connected.
- Consult the dealer or an experienced radio/TV technician for help.

Any changes or modifications not expressly approved by the party responsible for compliance could void the user's authority to operate this equipment. This transmitter must not be co-located or operating in conjunction with any other antenna or transmitter.

List of applicable FCC rules

This module has been tested and found to comply with part 22, part 24, part 27 requirements for Modular Approval.
The modular transmitter is only FCC authorized for the specific rule parts (i.e., FCC transmitter rules) listed on the grant, and that the host product manufacturer is responsible for compliance to any other FCC rules that apply to the host not covered by the modular transmitter grant of certification. If the grantee markets their product as being Part 15 Subpart B compliant (when it also contains unintentional-radiator digital circuity), then the grantee shall provide a notice stating that the final host product still requires Part 15 Subpart B compliance testing with the modular transmitter installed.

This device is intended only for OEM integrators under the following conditions: (For module device use)

1) The antenna must be installed such that 20 cm is maintained between the antenna and users, and
2) The transmitter module may not be co-located with any other transmitter or antenna.
As long as 2 conditions above are met, further transmitter test will not be required. However, the OEM integrator is still responsible for testing their end-product for any additional compliance requirements required with this module installed.

Radiation Exposure Statement

This equipment complies with FCC radiation exposure limits set forth for an uncontrolled environment. This equipment should be installed and operated with minimum distance 20 cm between the radiator & your body.