powered by
engageable

press ⏻ to turn on

Pulse

flip to get started

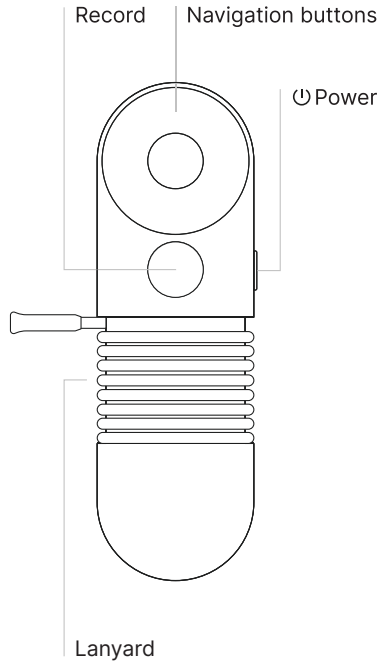

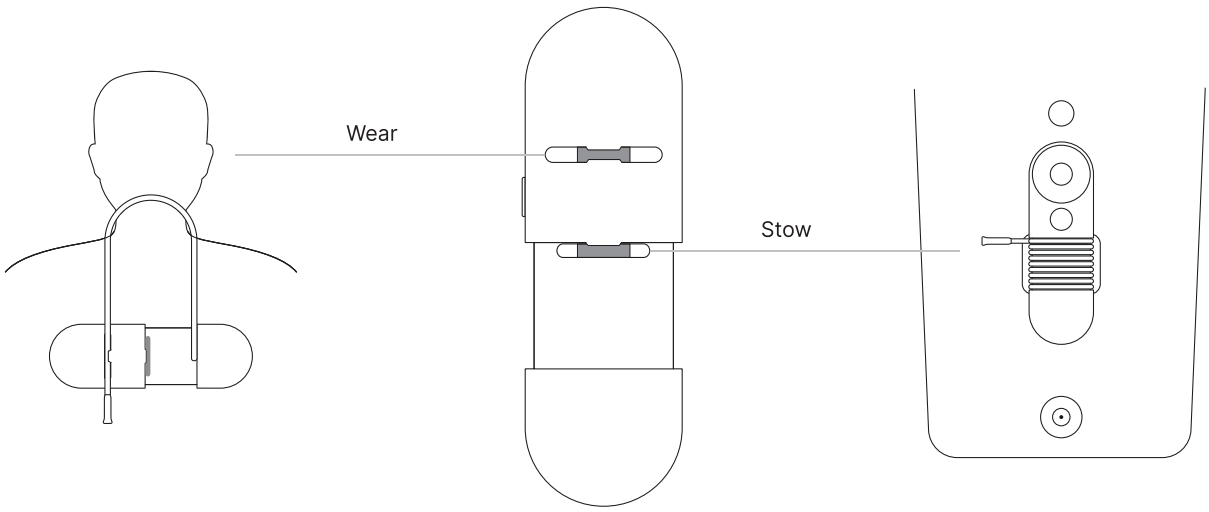

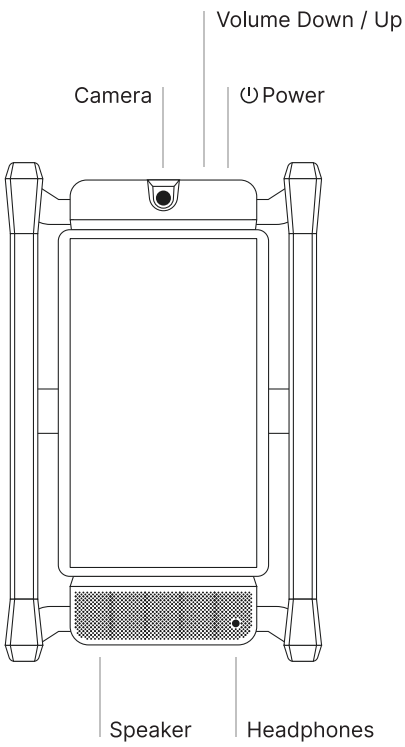

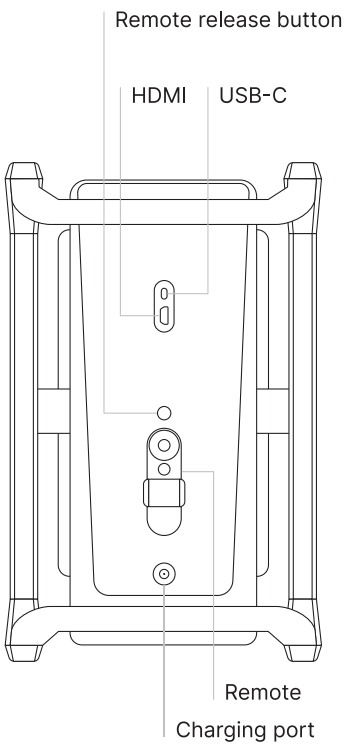

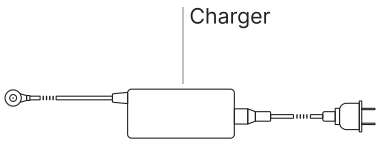

For more detailed information go to swivl.com/setup
Need help? Contact support@swivl.com

1450 El Camino Real | Menlo Park CA 94025 | (888)837-6209
TM and © 2023 Swivl. All rights reserved. Pulse and all other company, product and service names or slogans are trademarks of Swivl.

Model numbers. SW11450 (Main Device) and SW11450R (Remote)

Warranty. This product is guaranteed against manufacturing defects for one (1) year from the original date of purchase. Swivl's sole obligation in the event of such defects during this period is to repair or replace the defective part or product with a comparable part or product. This is done at Swivl's sole discretion. Except for such replacement, the sale, or other handling of this product is without warranty, condition or other liability even though the defect or loss is caused by negligence or other fault. Damage resulting from use, misuse, accident, or normal wear and tears are not covered by this or any warranty. Swivl assumes no liability for incidental or consequential damages relating to or result- ing from the use of this product or any of its parts. When servicing your warranty request, Swivl may require you to furnish proof of purchase. Visit swivl.com/terms for details.

Carrying and handling. Product contains sensitive components. Do not drop, disassemble, microwave, burn, paint, or insert foreign objects into the device. Do not use if the screen is cracked or damaged. Do not use if enclosure is cracked or damaged.

AC charger. The product is designed to be used only with the Swivl approved AC charger. Do not use if damaged. Make sure device and charger are in a well ventilated area when charging.

Outlet. The socket-outlet shall be installed near the equipment and shall be easily accessible.

Lanyard. The lanyard is only intended for use with adults. It does not contain a safety breakaway for use with children (under the age of 8).

Radio frequency interference. This product uses 1.9GHz wireless technology for wireless audio transmission, 2.4GHz and 5.0GHz for Wifi, 2.402GHz to 2.480GHz for Bluetooth, 6.24GHz to 8.24GHz for Ultra-Wideband. High saturation of similar technology in the immediate vicinity may degrade audio and tracking and data uploads.

Ultra-Wideband restrictions and limitations. This equipment may only be operated indoors. Operation outdoors violates 47 U.S.C. 301 and could subject the operator to serious legal penalties. Host devices with any potential for outdoor usage shall comply with the handheld limitations of §15.519 (a). Ultra-Wideband devices may not be employed to operate toys. Operation on board an aircraft, a ship, or a satellite is prohibited.

Battery. The lithium polymer batteries are hazardous and can cause serious injury. Manufacturer cannot be held liable for misuse. Battery should be replaced only by Swivl or a Swivl authorized service provider, and must be recycled or disposed of separately from household waste in accordance with local regulations.

Avoid water. Do not expose this product to water or rain, or handle near wet locations. Do not spill food or liquid on the product. In the case that it gets wet, unplug any cables and allow it to fully dry before turning it back on again. Damage due to liquid is not covered by the warranty.

Avoid operation. Do not use this product while driving. Use of this product may be prohibited while traveling in aircraft as it emits radio frequencies during operation.

Acceptable temperatures. The product is designed to be used between 10 degrees and 40 degrees C (50 degrees and 104 degrees F). It can be stored between 5 degrees and 50 degrees C (41 degrees and 122 degrees F). Low or high temperature conditions may cause the product to temporarily stop working, or working properly. Allow the unit to return to room temperature after storage at high or low temperatures before operation.

Important. Any modifications to the unit, unless expressly approved by the party responsible for compliance, could void the user's authority to operate the equipment. The product has demonstrated EMC compliance under conditions that included the use of compliant peripheral devices and shielded cables between system components. It is important that you use the compliant peripheral devices and shielded cables between system components to reduce the possibility of causing interference to radios, televisions, and other electronics devices.

FCC statement for both SW11450 and SW11450R. This device complies with Part 15 of the FCC Rules. Operation is subject to the following two conditions: (1) this device may not cause harmful interference, and (2) this device must accept any interference received, including interference that may cause undesired operation. NOTE: This equipment has been tested and found to comply with the limits for a Class B digital device, pursuant to Part 15 of the FCC Rules. These limits are designed to provide reasonable protection against harmful interference in a residential installation. This equipment generates, uses, and can radiate radio frequency energy and, if not installed and used in accordance with the instructions, may cause harmful interference to radio communications. However, there is no guarantee that interference will not occur in a particular installation. If this equipment does cause harmful interference to radio or television reception, which can be determined by turning the equipment off and on, the user is encouraged to try to correct the interference by one or more of the follow- ing measures: Reorient or relocate the receiving antenna, increase the separation between the equipment and receiver, connect the equipment into an outlet on a circuit different from that to which the receiver is connected, consult the dealer or an experienced radio/TV technician for help.

RF exposure warning for both SW11450 and SW11450R: This equipment complies with FCC radiation exposure limits set forth for an uncontrolled environment. End users must follow the specific operating instructions for satisfying RF exposure compliance. For Education Tablet SW11450, this transmitter must be at least 20 cm from the user and must not be co-located or operating in conjunction with any other antenna or transmitter.

Canadian compliance statement for both SW11450 and SW11450R. This device complies with Innovation, Science and Eco- nomic Development Canada's license-exempt RSSs.

Operation is subject to the following two conditions: 1. This device may not cause interference; and 2. This device must accept any interference, including interference that may cause undesired operation of the device. Cet appareil est conforme aux flux RSS exemptés de licence d'Innovation, Science et Développement économique Canada. L'opération est soumise aux deux conditions suivantes: 1. Cet appareil ne doit pas provoquer d'interférence; et 2. Cet appareil doit accepter toute interférence, y compris les interférences susceptibles de provoquer un fonctionnement indésirable de l'appareil.

Radiation exposure statement for both SW11450 and SW11450R. This equipment complies with the IC RSS-102 radiation exposure limits set forth for an uncontrolled environment. For Education Tablet SW11450, this equipment should be installed and operated with a minimum distance of 20 centimeters between the radiator and your body. Énoncé d'exposition aux rayonnements: Cet équipement est conforme aux limites d'exposition aux rayonnements ioniques RSS-102 Pour un environnement incontrôlé. Pour la tablette éducative SW11450, Cet équipement doit être installé et utilisé avec un Distance minimale de 20 centimètres entre le radiateur et votre corps.

EU compliance statement. Swivl hereby declares that this wireless device is in compliance with the essential requirements and other relevant provisions of the RED Directive.

(888) 837 6209
support@swivl.com

TM and © 2023 Swivl. All rights reserved. Swivl, the Swivl logo, and all other company, product, and service names or slogans are trademarks of Swivl.

10:23 Regulatory labels

TEST

Regulatory labels

Model: SW11450

Designed in California by Swivl
1450 El Camino Real
Menlo Park, CA 94025
Made in Thailand

United States of America

Contains FCC ID: 2AX46WFBTA
FCC ID: Y82-SC14S
FCC ID: 2AX46UWB01

Canada

Contains IC: 26786-WFBTA
IC: 9576A-SC14S
IC: 26786-UWB01 HVIN: UWB01

European Union

Australia/New Zealand

Model: SW11450R

Designed in California by Swivl
1450 El Camino Real
Menlo Park, CA 94025
Made in Thailand

United States of America

Contains FCC ID: Y82-SC14S
FCC ID: 2A2WQ-SR040

Canada

Contains IC: 9576A-SC14S
IC: 30624-SR040

European Union

Australia/New Zealand

OK

Swivl

How to Access Information about the Pulse

You can access information about your Pulse in the following way:

- To know your Memory Capacity, go to your Device Settings → Storage
- To see your Battery state, go to your Device Settings → Battery
- To check your WiFi and Bluetooth settings, go to Device Settings → About phone
- To access Regulatory Information on Pulse, go to Device Settings → About phone → Regulatory Labels

Updated 1 month ago

Was this article helpful?

Yes No

0 out of 0 found this helpful

Help