# RF TEST REPORT

**Report No.: SHATBL2607032W04**

| | | |
|---|---|---|
| **Applicant** | : | Shenzhen DOOGEE Hengtong Technology CO.,LTD |
| **Product Name** | : | Smart Phone |
| **Brand Name** | : | DOOGEE |
| **Model Name** | : | Note70 X |
| **Series Model** | : | Note 70,Note70 Pro,Note70 Ultra,Note70 Max,Note 80, Note80 Pro,Note80 Ultra,Note80 Max,A11,A11 Plus, A11 Pro,A11S,A11S Plus,A11S Pro |
| **FCC ID** | : | 2AX4Y-NOTE70X |
| **Test Standard** | : | FCC Part 15 Subpart E §15.407 |
| **Date of Sample Arrival** | : | Jul.21, 2026 |
| **Date of Test** | : | Jul.21, 2026~Jul.26, 2026 |
| **Issue Date** | : | Jul.31, 2026 |

**Report Prepared by** : Emily

(Emily)

**Report Approved by** : Guozheng Li

(Guozheng Li)

**Authorized Signatory** : Terry Yang

(Terry Yang)

"Shanghai ATBL Technology Co., Ltd." hereby certifies that according to actual testing conditions. The test results or observations are provided in accordance with measured value, without taking risks caused by uncertainty into account. Without explicit stipulation in special agreements, standards or regulations, ATBL shall not assume any responsibility. The test results or observations are applicable only to tested sample. Client shall be responsible for representativeness of the sample and authenticity of the material. This report will be void without authorized signature or special seal for testing report. Do not copied without authorization.

# Table Of Contents

Declaration Of Report ..... 3
Revision History ..... 4
Summary Of Test Result ..... 5
1. General Description ..... 6
1.1. Applicant ..... 6
1.2. Manufacturer ..... 6
1.3. Factory ..... 6
1.4. General Information of EUT ..... 7
1.5. Equipment Specification ..... 8
1.6. Modification of EUT ..... 9
1.7. Laboratory Information ..... 9
1.8. Applicable Standards ..... 9
2. Test Configuration of EUT ..... 10
2.1. Carrier Frequency Channel ..... 10
2.2. Test Modes ..... 11
2.3. Block Diagram of Test System ..... 12
2.4. Description of Support Units ..... 12
2.5. Test Software and Power Level ..... 12
2.6. EUT Operating Conditions ..... 13
2.7. Equipment List ..... 14
2.8. Measurement Uncertainty ..... 16
2.9 Environmental conditions ..... 16
2.10. Labeling Requirements ..... 16
3. Test Result ..... 17
3.1. 26dB Emission Bandwidth ..... 17
3.2. Minimum Emission Bandwidth for the band 5.725−5.85 GHz ..... 19
3.3. Maximum Conducted Average Output Power ..... 20
3.4. Power Spectral Density ..... 22
3.5. Frequency Stability ..... 24
3.6. Radiated Spurious Emission and Restricted Band ..... 25
3.7. Dynamic Frequency Selection ..... 29
3.8. AC Power-Line Conducted Emission ..... 42
3.9. Transmit Power Control ..... 44
3.10. Antenna Requirement ..... 45
4. Test Setup Photographs ..... 45
5. External And Internal Photos of The EUT ..... 45

# Declaration Of Report

1.The device has been tested by ATBL, and the test results show that the equipment under test (EUT) is in compliance with the requirements of 47 CFR 15.407. And it is applicable only to the tested sample identified in the report.

2.This report shall not be reproduced except in full, without the written approval of ATBL, this document only be altered or revised by ATBL, personal only, and shall be noted in the revision of the document.

3.The general information of EUT in this report is provided by the customer or manufacture, ATBL is only responsible for the test data but not for the information provided by the customer or manufacture.

4.The results in this report is only apply to the sample as tested under conditions. The customer or manufacturer is responsible for ensuring that the additional production units of this model have the same electrical and mechanical components.

5.In this report, ‘☐’ indicates that EUT does not support content after ‘☐’, and ‘☑’ indicates that it supports content after ‘☑’

# Revision History

| Rev. | Issue Date | Report No. | Effect Page | Contents |
|---|---|---|---|---|
| 00 | Jul.31, 2026 | SHATBL2607032W04 | ALL | Initial Release |

# Summary Of Test Result

| Report Section | Standard Section | Test Item | Result | Remark |
|---|---|---|---|---|
| 3.1 | 47 CFR 15.407(a) | Emission Bandwidth(26dBm Bandwidth) | PASS | - |
| 3.1 | -- | Occupied Bandwidth | PASS | Reference only. |
| 3.2 | 47 CFR 15.407(e) | Emission Bandwidth(6dBm Bandwidth) | PASS | - |
| 3.3 | 47 CFR 15.407(a) | Maximum Conducted Output Power | PASS | - |
| 3.4 | 47 CFR 15.407(a) | Power Spectral Density | PASS | - |
| 3.5 | 47 CFR 15.407(g) | Frequency Stability | PASS | - |
| 3.6 | 47 CFR 15.407(b) &15.209(a) | Undesirable emission | PASS | - |
| 3.6 | 47 CFR 15.407(b)/15.209(a)/15.205(a) | Radiated Emissions | PASS | - |
| 3.7 | 47 CFR 15.407(h) | Dynamic Frequency Selection | N/A | - |
| 3.8 | 47 CFR 15.207(a) | AC Power Conducted Emission | PASS | |
| 3.9 | 47 CFR 15.207(h) | Transmit Power Control | N/A | |
| 3.10 | 47 CFR 15.203 | Antenna Requirement | PASS | - |

Remark: ‘N/A’ denotes test is not applicable in this Test Report.

# 1. General Description

## 1.1. Applicant

| | | |
|---|---|---|
| Name | : | Shenzhen DOOGEE Hengtong Technology CO.,LTD |
| Address | : | B, 2/F, Building A4, Silicon Valley Power Digital Industrial Park, No. 22, Longhua New District Shenzhen, China |

## 1.2. Manufacturer

| | | |
|---|---|---|
| Name | : | Shenzhen DOOGEE Hengtong Technology CO.,LTD |
| Address | : | B, 2/F, Building A4, Silicon Valley Power Digital Industrial Park, No. 22, Longhua New District Shenzhen, China |

## 1.3. Factory

| | | |
|---|---|---|
| Name | : | Shenzhen DOOGEE Hengtong Technology CO.,LTD |
| Address | : | B, 2/F, Building A4, Silicon Valley Power Digital Industrial Park, No. 22, Longhua New District Shenzhen, China |

## 1.4. General Information of EUT

| | |
|---|---|
| Equipment Name | Smart Phone |
| Model Name | Note70 X |
| Series model | Note 70,Note70 Pro,Note70 Ultra,Note70 Max,Note 80,<br>Note80 Pro,Note80 Ultra,Note80 Max,A11,A11 Plus,<br>A11 Pro,A11S,A11S Plus,A11S Pro |
| Model Difference | They differ only in appearance color, memory size, and model naming; all other aspects are identical. |
| Sample No. | 2607043006 |
| Power supply | DC 3.93V by Battery |
| Adapter | Input:AC100-240V 50/60Hz 0.6A<br>Output: 5.0V⎓ 3.0A 15.0W;9.0V⎓ 2.0A 18.0W;12.0V⎓ 1.5.0A 18.0W Max |
| Battery | Rated Voltage:3.93V<br>Charge Limit Voltage:4.53V<br>Capacity:8000mAh |
| Hardware Version | SC7302QU_MB_V1.0.0 |
| Software Version | DOOGEE-Note70 X-EEA-Android16.0-20260814 |
| Antenna Type | PIFA Antenna |
| Antenna Gain | 2.88dBi |
| Connecting I/O Port(s) | Refer to the remark below |

Remark:

The above information of EUT was declared by manufacturer. Please refer to the specifications or user's manual for more detailed description.

## 1.5. Equipment Specification

| Equipment Specification | | |
|---|---|---|
| Frequency Range | 5180 ~ 5250MHz;5745 ~ 5825MHz; | |
| Maximum Output Power To Antenna | ☑802.11a: | 11.06dBm |
| | ☑802.11n(HT)20: | 11.02dBm |
| | ☑802.11n(HT)40: | 8.97dBm |
| | ☑802.11ac(VHT)20: | 11.11dBm |
| | ☑802.11ac(VHT)40: | 9.04dBm |
| | ☑802.11ac(VHT)80: | 9.01dBm |
| | ☑802.11ax(HE)20: | 11.01dBm |
| | ☑802.11ax(HE)40: | 8.91dBm |
| | ☑802.11ax(HE)80: | 9.06dBm |
| Type of Modulation | ☑802.11a/n: OFDM (BPSK/QPSK/16QAM/64QAM) | |
| | ☑802.11ac/ax: OFDMA (BPSK/QPSK/16QAM/64QAM/256QAM/1024QAM) | |
| TX Power Control (TPC) | ☐Supported | |
| | ☑No Supported | |
| Type of Device | ☐Master | |
| | ☑Client Without Radar Detection | |
| | ☐Client With Radar Detection | |

## 1.6. Modification of EUT

No modifications are made to the EUT during all test items.

## 1.7. Laboratory Information

| | | |
|---|---|---|
| **Company Name** | : | Shanghai ATBL Technology Co., Ltd. |
| **Address** | : | 5-6/F., Unit 1, No 8, Free Trade One Life Science No. 160, Basheng Road, Pudong New District, Shanghai, China |
| **Telephone** | : | +86(0)21-51298625 |
| **FCC-Registration Number** | : | 485917 |
| **Designation Number** | : | CN1306 |
| **A2LA Number** | : | 6184.01 |
| **CNAS Number** | : | CNAS L14531 |
| **ISED Designation Number** | : | 27371 |
| **CAB identifier** | : | CN0116 |

## 1.8. Applicable Standards

According to the specifications of the manufacturer, the EUT must comply with the requirements of the following standards:

47 CFR Part 15 Subpart E §15.407;

FCC KDB789033 D02 General UNII Test Procedures New Rules v02r01;

FCC KDB 662911 D01 Multiple Transmitter Output v02r01;

FCC KDB 905462 D02 UNII DFS Compliance Procedures New Rules v02;

ANSI C63.10-2020+Cor 1-2023

Remark:

All test items were verified and recorded according to the standards and without any deviation during the test.

# 2. Test Configuration of EUT

## 2.1. Carrier Frequency Channel

| Frequency Band | Bandwidth | Channel | Frequency MHz | Channel | Frequency MHz |
|---|---|---|---|---|---|
| U-NII-1 | 20 MHz | 36 | 5180 | 40 | 5200 |
| | | 44 | 5220 | 48 | 5240 |
| | 40 MHz | 38 | 5190 | 46 | 5230 |
| | 80 MHz | 42 | 5210 | -- | -- |
| U-NII-3 | 20 MHz | 149 | 5745 | 153 | 5765 |
| | | 157 | 5785 | 161 | 5805 |
| | | 165 | 5825 | -- | -- |
| | 40 MHz | 151 | 5755 | 159 | 5795 |
| | 80 MHz | 155 | 5775 | -- | -- |

## 2.2. Test Modes

Final test modes are considering the modulation and worse data rates as below table.

| Summary Table of Test Channel | | | |
|---|---|---|---|
| Test Item | Mode | Frequency Band | Channel |
| For Conducted and Radiated Test | ☑802.11a:<br>☑802.11n(HT)20:<br>☑802.11ac(VHT)20:<br>☑802.11ax(HE)20: | U-NII-1 | 36 40 48 |
| | | U-NII-3 | 149 157 165 |
| | ☑802.11n(HT)40:<br>☑802.11ac(VHT)40:<br>☑802.11ax(HE)40: | U-NII-1 | 38 46 |
| | | U-NII-3 | 151 159 |
| | ☑802.11ac(VHT)80:<br>☑802.11ax(HE)80: | U-NII-1 | 42 |
| | | U-NII-3 | 155 |
| For AC Power-line Conducted Emission | 802.11ac20:Channel 48_5240MHz | | |

Remark:

All the test modes of Radiated Spurious Emission (RSE) were tested at the worst data rate; only the worse data shown in report.

## 2.3. Block Diagram of Test System

### 2.3.1. For AC Power-Line Conducted Emission

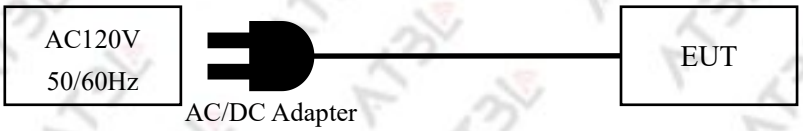


### 2.3.2. For Radiated Spurious Emission

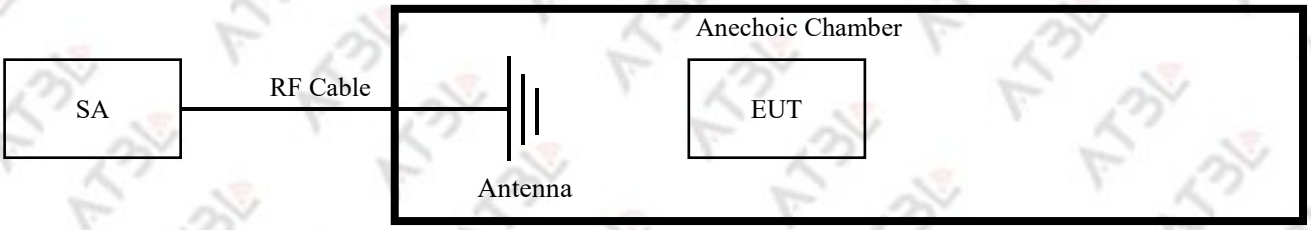


### 2.3.3. For Conducted Test

Power:

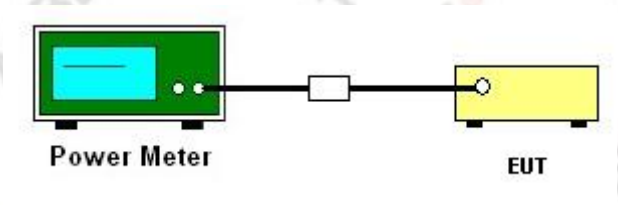


Other:

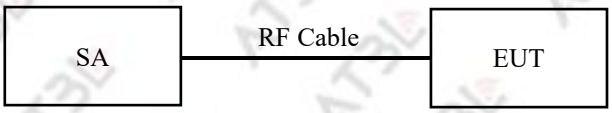


## 2.4. Description of Support Units

| NO. | Unit | Brand | Model | Description |
|---|---|---|---|---|
| 1 | RF Cable | PASTERNACK | PE300 | 5cm |

## 2.5. Test Software and Power Level

During the test, the channel and power control software provided by the customer is used to control the operation channel and output power level.

| Frequency Band | Bandwidth | Channel | Frequency MHz | Software set level | Channel | Frequency MHz | Software set level |
|---|---|---|---|---|---|---|---|
| U-NII-1 | 20 MHz | 36 | 5180 | 17 | 40 | 5200 | 17 |
| | | 48 | 5240 | 17 | -- | -- | |
| | 40 MHz | 38 | 5190 | 15 | 46 | 5230 | 15 |
| | 80 MHz | 42 | 5210 | 12 | -- | -- | |
| U-NII-3 | 20 MHz | 149 | 5745 | 26 | 157 | 5785 | 26 |
| | | 165 | 5825 | 26 | -- | -- | |
| | 40 MHz | 151 | 5755 | 23 | 159 | 5795 | 23 |
| | 80 MHz | 155 | 5775 | 20 | -- | -- | |

Fixed-frequency control software

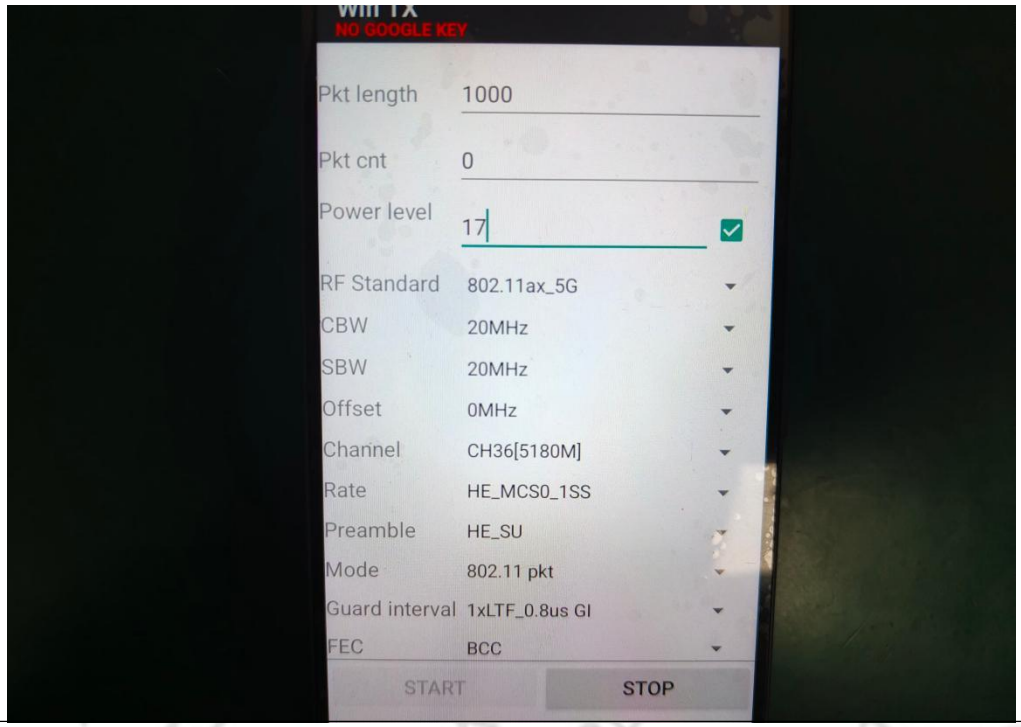


## 2.6. EUT Operating Conditions

For AC power-line conducted emission, the EUT was connected under the large package sizes transmission.

For radiated spurious emission and conducted test, the engineering test program was provided and make the EUT to continuous transmit.

## 2.7. Equipment List

### 2.7.1. For AC Power-Line Conducted Emission

| Kind of Equipment | Manu facturer | Type No. | Serial No. | equipment number | Calibrated until | Calibrated due until | Cal. Interval |
|---|---|---|---|---|---|---|---|
| EMI Test Receiver | R&S | ESPI | 100679 | SHATBL-E012 | 2026.03.31 | 2027.03.30 | 1 year |
| LISN | R&S | ENV216 | 101300 | SHATBL-E013 | 2026.03.31 | 2027.03.30 | 1 year |
| LISN | R&S | ENV216 | 100333 | SHATBL-E041 | 2026.03.31 | 2027.03.30 | 1 year |
| CE Cable | Chuangce xing | 2M | EMI0014 | SHATBL-E014 | N/A | N/A | N/A |
| Temperature & Humidity | Deli | Deli | EMI0015 | SHATBL-E015 | 2026.06.30 | 2027.06.29 | 1 year |
| Testing Software | FALA | EZ-EMC(Ver.EMC-CON 3A1.1) | EMI0044 | SHATBL-E044 | N/A | N/A | N/A |

### 2.7.2. For Radiated Spurious Emission

| Kind of Equipment | Manu facturer | Type No. | Serial No. | equipment number | Calibrated until | Calibrated due until | Cal. Interval |
|---|---|---|---|---|---|---|---|
| Signal analyzer | Agilent | N9020A | MY50200811 | SHATBL-E017 | 2026.03.31 | 2027.03.30 | 1 year |
| Amplifier | JPT | JPA0118-55-303A | 1910001800055000 | SHATBL-E006 | 2026.03.31 | 2027.03.30 | 1 year |
| Amplifier | JPT | JPA-10M1G32 | 21010100035001 | SHATBL-E005 | 2026.03.31 | 2027.03.30 | 1 year |
| Antenna/Turn table Controller | Brilliant | N/A | N/A | SHATBL-E007 | N/A | N/A | N/A |
| Loop Antenna(9kHz-30 MHz) | Daze | ZN30900C | 20077 | SHATBL-E042 | 2026.05.20 | 2027.05.19 | 1 year |
| Bilog Antenna | SCHWARZBECK | VULB 9168 | 01174 | SHATBL-E008 | 2026.05.20 | 2027.05.19 | 1 year |
| Broad-band Horn Antenna | SCHWARZBECK | BBHA 9120D | 02334 | SHATBL-E009 | 2026.05.20 | 2027.05.19 | 1 year |
| Horn Antenna | COM-POWER | AH-1840 | 10100008 | SHATBL-E043 | 2026.06.26 | 2027.06.25 | 1 year |
| Thermometer | DeLi | N/A | N/A | SHATBL-E015 | 2026.06.30 | 2027.06.29 | 1 year |
| Test Software | FALA | EMC-RI(Ver.4A2) | N/A | N/A | N/A | N/A | N/A |
| Wideband radio communication tester | R&S | CMW500 | 101331 | SHATBL-W044 | 2026.06.27 | 2027.06.26 | 1 year |
| Spectrum analyzer | R&S | FSV40-N | 101761 | SHATBL-W036 | 2026.06.27 | 2027.06.26 | 1 year |
| Filter box | XH microwave | RSE01 | ATBL011 | SHATBL-W036-W030 | 2026.06.27 | 2027.06.26 | 1 year |
| Coaxial cable (9KHz~26.5GHz) | XINQY | XINQYCT 26PE | CT26PE | SHATBL-W037 | 2026.06.27 | 2027.06.26 | 1 year |
| Coaxial cable (18~40GHz) | XINQY | CXN3506 | CLB220E | SHATBL-W037 | 2026.06.27 | 2027.06.26 | 1 year |

### 2.7.3. For Conducted Test

| Kind of Equipment | Manu facturer | Type No. | Serial No. | equipment number | Calibrated until | Calibrated due until | Cal. Interval |
|---|---|---|---|---|---|---|---|
| Power sensor | DARE | RPR3006W | 16I00054SN016 | SHATBL-W008 | 2026.06.27 | 2027.06.26 | 1 year |
| Adjustable Attenuator | Agilent | 8494B | MY42144015 | SHATBL-W009 | 2026.06.27 | 2027.06.26 | 1 year |
| Adjustable Attenuator | Agilent | 8496B | MY42143776 | SHATBL-W010 | 2026.06.27 | 2027.06.26 | 1 year |
| Environmental Test Chamber | KSON | THS-B6C-150 | 9159K | SHATBL-W019 | 2026.03.31 | 2027.03.30 | 1 year |
| Signal analyzer | Keysight | N9020A | MY50510136 | SHATBL-W003 | 2026.06.27 | 2027.06.26 | 1 year |
| Vector signal generator | Agilent | N5182A | MY48180764 | SHATBL-W043 | 2026.06.27 | 2027.06.26 | 1 year |
| Analog signal generator | Keysight | N5182B | MY57300196 | SHATBL-W005 | 2026.06.27 | 2027.06.26 | 1 year |
| Wideband radio communication tester | R&S | CMW500 | 101331 | SHATBL-W007 | 2026.06.27 | 2027.06.26 | 1 year |
| Switch Box | Cesheng | smu 1003 | WCS20221215 | SHATBL-W046 | 2026.03.31 | 2027.03.30 | 1 year |
| Thermometer | DeLi | N/A | N/A | SHATBL-W011 | 2026.06.30 | 2027.06.29 | 1 year |
| Test Software | Cesheng | WCS-WCN | N/A | SHATBL-W021 | N/A | N/A | N/A |
| Attenuator | Xupu | 2W | 100024644897 | SHATBL-W026 | N/A | N/A | N/A |

Remark:
Calibration duration for above equipments is 1 year.

## 2.8. Measurement Uncertainty

The reported uncertainty of measurement y±U, where expended uncertainty U is based on a standard uncertainty multiplied by a coverage factor of k=2, providing a level of confidence of approximately 95 %.

| No. | Item | | Uncertainty |
|---|---|---|---|
| 1 | Conducted Output Power | | 1.27dB |
| 2 | Power spectral density | | 1.28dB |
| 3 | Conducted Frequency Stability | | 10.14Hz |
| 4 | Conducted spurious emissions | | 1.73dB |
| 5 | RF Cable Loss | | 1.22dB |
| 6 | Radiated Spurious Emission 9KHz-30MHz | | 2.35dB |
| 7 | Radiated Spurious Emission 30MHz-1GHz | | 2.59dB |
| 8 | Radiated Spurious Emission 1GHz-18GHz | | 2.62dB |
| 9 | Radiated Spurious Emission 18GHz - 40GHz | | 2.80dB |
| 10 | Occupied bandwidth | | 23.20Hz |
| 11 | Conducted Emissions | 9kHz ~ 150kHz | 3.4dB |
| | | 150kHz ~ 30MHz | 3.73dB |

## 2.9 Environmental conditions

During the measurement the environmental conditions were within the listed ranges:

| | | |
|---|---|---|
| Temperature | Normal Temperature: | 20°C |
| Voltage | Normal Voltage: | DC 3.93V |
| Other | Relative Humidity: | 51% |
| | Air Pressure: | 102kPa |

## 2.10. Labeling Requirements

Per 2.1074 & 15.19: Docket 95-19:

The label shall be permanently affixed at a conspicuous location on the device; instruction manual or pamphlet supplied to the user and be readily visible to the purchaser at the time of purchase. However, when the device is so small wherein placement of the label with specified statement is not practical, only the FCC ID must be displayed on the device per Section 15.19(a)(5). Please see attachment for FCC ID label and label location.

# 3. Test Result

## 3.1. 26dB Emission Bandwidth

### 3.1.1. Limit

N/A

### 3.1.2. Test Procedure

**Emission Bandwidth:**

1).Set RBW = shall be in the range of 1% to 5% of the emission Bandwidth.

2).Set the video bandwidth (VBW) > RBW.

3).Detector = Peak.

4).Trace mode = Max hold.

5).Measure the maximum width of the emission that is 26 dB down from the peak of the emission. Compare this with the RBW setting of the instrument. Readjust RBW and repeat measurement as needed until the RBW/EBW ratio is in the range of 1% to 5%.

**99% Occupied Bandwidth:**

1).Set center frequency to the nominal EUT channel center frequency.

2).Set span = 1.5 times to 5.0 times the OBW.

3).Set RBW = 1% to 5% of the OBW

4).Set VBW ≥ 3 RBW

5).Video averaging is not permitted. Where practical, a sample detection and single sweep mode shall be used. Otherwise, peak detection and max hold mode (until the trace stabilizes) shall be used.

6).Use the 99% power bandwidth function of the instrument (if available). If the instrument does not have a 99% power bandwidth function, the trace data points are recovered and directly summed in power units. The recovered amplitude data points, beginning at the lowest frequency, are placed in a running sum until 0.5% of the total is reached; that frequency is recorded as the lower frequency. The process is repeated until 99.5% of the total is reached; that frequency is recorded as the upper frequency. The 99% occupied bandwidth is the difference between these two frequencies.

### 3.1.3. Test Setup

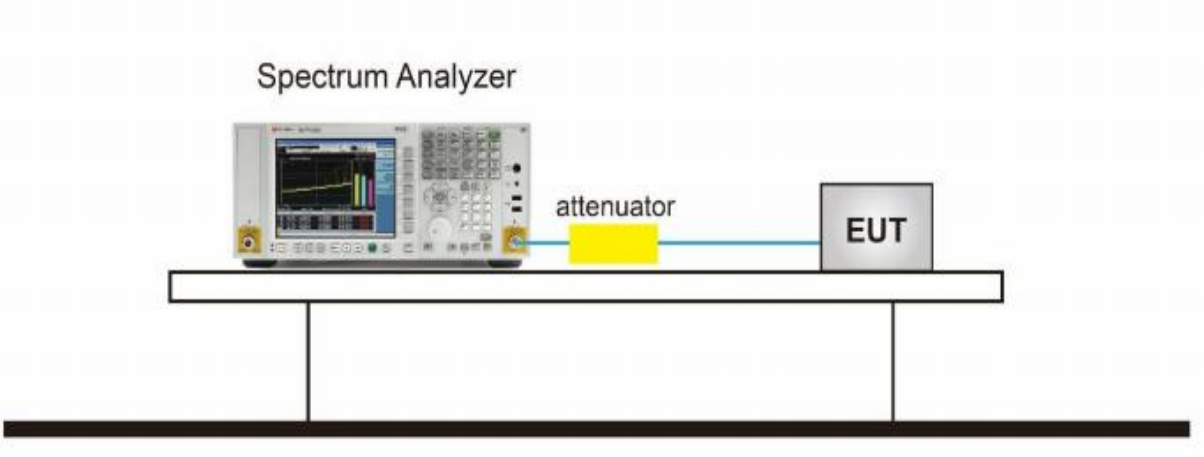


### 3.1.4. Test Result of Emission Bandwidth And 99% Occupied Bandwidth

Please refer to the Appendix A1_Conduction Data for 5GHz WIFI

## 3.2. Minimum Emission Bandwidth for the band 5.725−5.85 GHz

### 3.2.1. Limit

Section 15.407(e) specifies the minimum 6 dB emission bandwidth of at least 500 kHz for the band 5.725-5.85 GHz

### 3.2.2. Test Procedure

1).Set resolution bandwidth (RBW) = 100 kHz

2).Set the video bandwidth 3 x RBW.

3).Detector = Peak.

4).Trace mode = Max hold.

5).Measure the maximum width of the emission that is constrained by the frequencies associated with the two outermost amplitude points (upper and lower frequencies) that are attenuated by 6 dB relative to the maximum level measured in the fundamental emission.

### 3.2.3. Test Setup

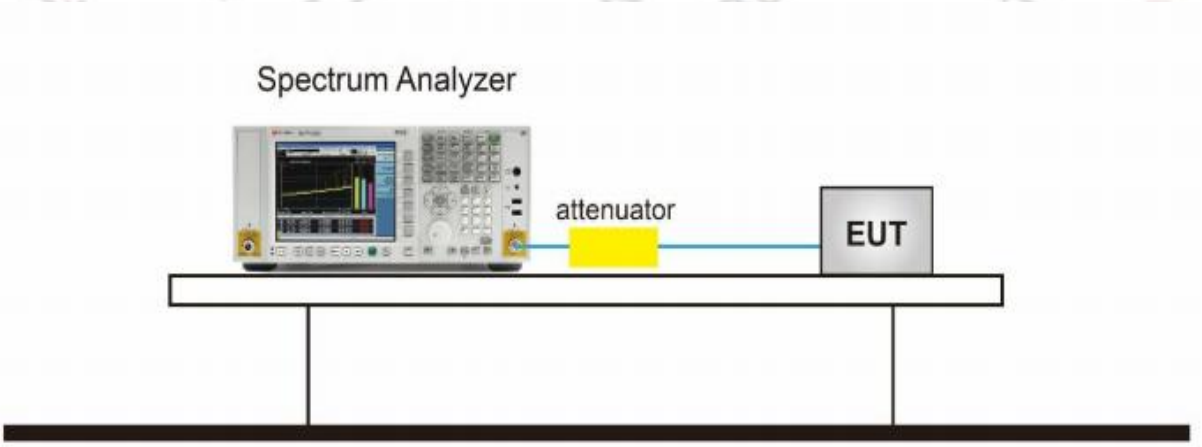


### 3.2.4. Test Result of Minimum Emission Bandwidth

Please refer to the Appendix A2_Conduction Data for 5GHz WIFI

## 3.3. Maximum Conducted Average Output Power

### 3.3.1. Limit

**For the band 5.15-5.25 GHz:**

1). For an outdoor access point operating in the band 5.15-5.25 GHz, the maximum conducted output power over the frequency band of operation shall not exceed 1 W provided the maximum antenna gain does not exceed 6dBi.

2). For an indoor access point operating in the band 5.15-5.25 GHz, the maximum conducted output power over the frequency band of operation shall not exceed 1 W provided the maximum antenna gain does not exceed 6dBi.

3). For fixed point-to-point access points operating in the band 5.15-5.25 GHz, the maximum conducted output power over the frequency band of operation shall not exceed 1 W.

4). For client devices in the 5.15-5.25 GHz band, the maximum conducted output power over the frequency band of operation shall not exceed 250mW provided the maximum antenna gain does not exceed 6dBi.

5).If transmitting antennas of directional gain greater than 6dBi are used, both the maximum conducted output power and the maximum power spectral density shall be reduced by the amount in dB that the directional gain of the antenna exceeds 6dBi.

**For the 5.25-5.35 GHz and 5.47-5.725 GHz bands**:

1).the maximum conducted output power over the frequency bands of operation shall not exceed the lesser of 250mW or 11dBm + 10 log B, where B is the 26 dB emission bandwidth in megahertz.

2).If transmitting antennas of directional gain greater than 6dBi are used, both the maximum conducted output power and the maximum power spectral density shall be reduced by the amount in dB that the directional gain of the antenna exceeds 6dBi.

**For the band 5.725-5.85 GHz**:

1).the maximum conducted output power over the frequency band of operation shall not exceed 1 W.

2).If transmitting antennas of directional gain greater than 6dBi are used, both the maximum conducted output power and the maximum power spectral density shall be reduced by the amount in dB that the directional gain of the antenna exceeds 6dBi.

### 3.3.2. Test Procedure

KDB 789033D02v02r01- Section E)3)b) Method PM-G.

Measurements may be performed using a wideband gated RF power meter provided that the gate parameters are adjusted such that the power is measured only when the EUT is transmitting at its maximum power control level. Since the measurement is made only during the ON time of the transmitter, no duty cycle correction factor is required.

### 3.3.3. Test Setup

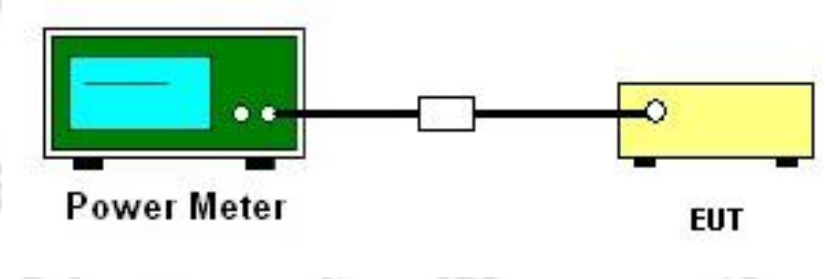


### 3.3.4. Test Result of Maximum Conducted Average Output Power

Please refer to the Appendix A3_Conduction Data for 5GHz WIFI

## 3.4. Power Spectral Density

### 3.4.1. Limit

**For the band 5.15-5.25 GHz:**

1).For an outdoor access point operating in the band 5.15 - 5.25 GHz, the maximum power spectral density shall not exceed 17dBm in any 1 MHz band.

2). For an indoor access point operating in the band 5.15 - 5.25 GHz, the maximum power spectral density shall not exceed 17dBm in any 1 MHz band.

3).For fixed point-to-point access points operating in the band 5.15 - 5.25 GHz, transmitters that employ a directional antenna gain greater than 23dBi, a 1 dB reduction in maximum power spectral density is required for each 1 dB of antenna gain in excess of 23dBi.

4).For mobile and portable client devices in the 5.15 - 5.25 GHz band, the maximum power spectral density shall not exceed 11dBm in any 1 MHz band.

5).If transmitting antennas of directional gain greater than 6dBi are used, both the maximum conducted output power and the maximum power spectral density shall be reduced by the amount in dB that the directional gain of the antenna exceeds 6 dBi.

**For the 5.25-5.35 GHz and 5.47-5.725 GHz bands:**

1).The maximum power spectral density shall not exceed 11 dBm in any 1 megahertz band.

2).If transmitting antennas of directional gain greater than 6 dBi are used, the peak power spectral density shall be reduced by the amount in dB that the directional gain of the antenna exceeds 6 dBi.

**For the 5.725-5.850 GHz bands:**

1).the maximum power spectral density shall not exceed 30 dBm in any 500-kHz band.

2).If transmitting antennas of directional gain greater than 6 dBi are used, both the maximum conducted output power and the maximum power spectral density shall be reduced by the amount in dB that the directional gain of the antenna exceeds 6 dBi. However, fixed point-to-point U-NII devices operating in this band may employ transmitting antennas with directional gain greater than 6 dBi without any corresponding reduction in transmitter conducted power.

### 3.4.2. Test Procedure

1).Measure the duty cycle, x, of the transmitter output signal as described in II.B.

2). Set span to encompass the EBW (or, alternatively, the entire 99% occupied bandwidth) of the signal.

3). Set RBW = 1 MHz.

4). Set VBW ≥ 3 MHz.

5). Number of points in sweep ≥ 2 × span / RBW. (This ensures that bin-to-bin spacing is ≤ RBW/2, so that narrowband signals are not lost between frequency bins.)

6). Sweep time = auto.

7). Detector = averaging, if available. Otherwise, use sample detector mode.

8). Do not use sweep triggering. Allow the sweep to “free run.”

9). Trace mode = averaging.

**For U-NII-3 band:**

1) Set span to encompass the entire emission bandwidth (EBW) of the signal.

2) Set RBW = 500 kHz, Set VBW ⩾ 3 RBW, Detector = averaging

3) Sweep time = auto, trigger set to “free run”.

4) Trace mode = averaging.

5) Record the max value

### 3.4.3. Test Setup

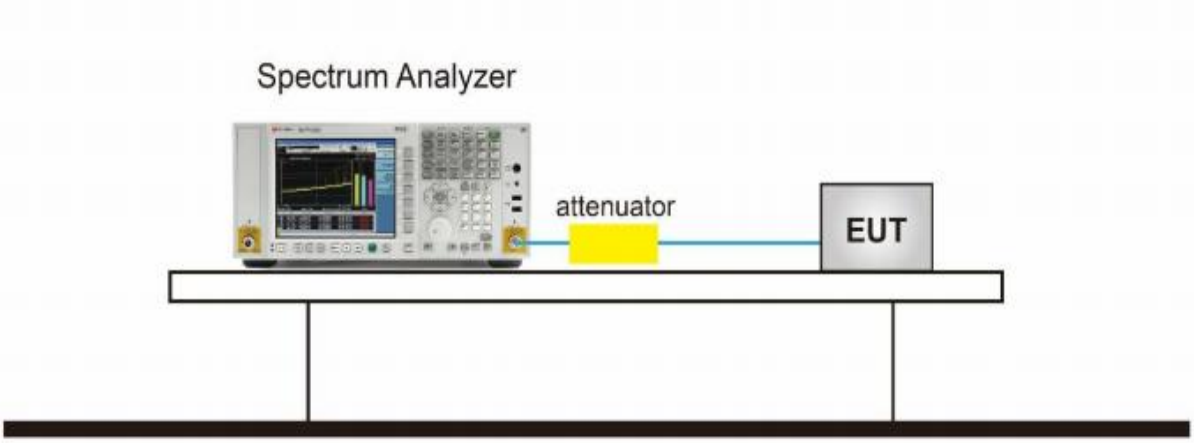


### 3.4.4. Test Result of Power Spectral Density

Please refer to the Appendix A4_Conduction Data for 5GHz WIFI

## 3.5. Frequency Stability

### 3.5.1. Limit

Manufacturers of U-NII devices are responsible for ensuring frequency stability such that an emission is maintained within the band of operation under all conditions of normal operation as specified in the users manual.

### 3.5.2. Test Procedure

**Frequency Stability under Temperature Variations:**

The equipment under test was connected to an external AC or DC power supply and input rated voltage. RF output was connected to a frequency counter or spectrum analyzer via feed through attenuators. The EUT was placed inside the temperature chamber. Set the spectrum analyzer RBW low enough to obtain the desired frequency resolution and measure EUT 20℃ operating frequency as reference frequency. Turn EUT off and set the chamber temperature to -30℃. After the temperature stabilized for approximately 30 minutes recorded the frequency. Repeat step measure with 10℃ increased per stage until the highest temperature of +50℃ reached.

**Frequency Stability under Voltage Variations:**

Set chamber temperature to 20℃. Use a variable AC power supply / DC power source to power the EUT and set the voltage to rated voltage. Set the spectrum analyzer RBW low enough to obtain the desired frequency resolution and recorded the frequency.

Reduce the input voltage to specify extreme voltage variation (±15%) and endpoint, record the maximum frequency change.

### 3.5.3. Test Setup

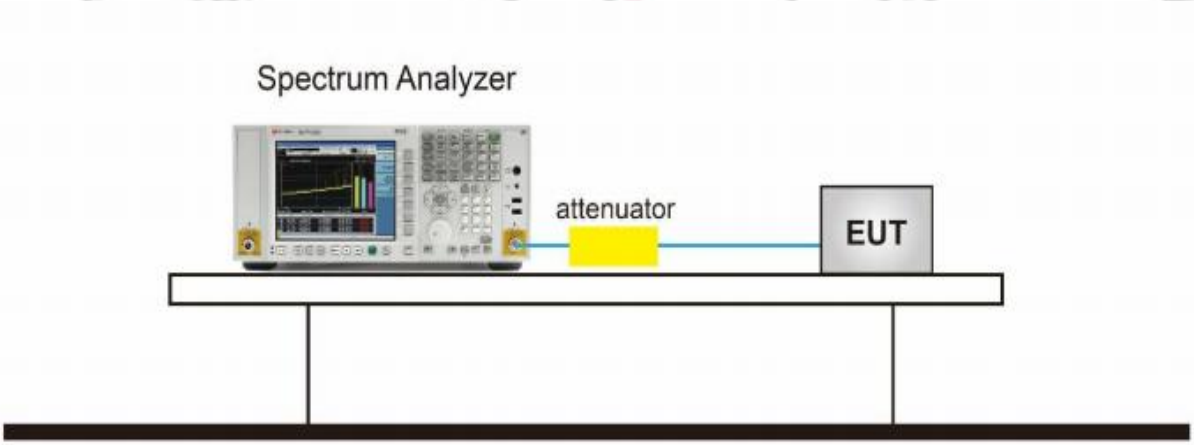


### 3.5.4. Test Result of Frequency Stability

Please refer to the Appendix A5_Conduction Data for 5GHz WIFI

## 3.6. Radiated Spurious Emission and Restricted Band

### 3.6.1. Limit

*47 CFR 15.407(b)*:The maximum emissions outside of the frequency bands of operation shall be attenuated in accordance with the following limits:

1).For transmitters operating in the 5.15-5.25 GHz band: All emissions outside of the 5.15-5.35 GHz band shall not exceed an e.i.r.p. of −27 dBm/MHz.

2).For transmitters operating in the 5.25-5.35 GHz band: All emissions outside of the 5.15-5.35 GHz band shall not exceed an e.i.r.p. of −27 dBm/MHz.

3).For transmitters operating in the 5.47-5.725 GHz band: All emissions outside of the 5.47-5.725 GHz band shall not exceed an e.i.r.p. of −27 dBm/MHz.

4).For transmitters operating in the 5.725-5.85 GHz band: All emissions shall be limited to a level of −27 dBm/MHz at 75 MHz or more above or below the band edge increasing linearly to 10 dBm/MHz at 25 MHz above or below the band edge, and from 25 MHz above or below the band edge increasing linearly to a level of 15.6 dBm/MHz at 5 MHz above or below the band edge, and from 5 MHz above or below the band edge increasing linearly to a level of 27 dBm/MHz at the band edge.

*47 CFR 15.209(a)*: The emissions from an intentional radiator shall not exceed the field strength levels specified in the following table:

| Frequency (MHz) | Field strength (microvolts/meter) | Measurement distance (meters) |
|---|---|---|
| 0.009-0.490 | 2400/F(kHz) | 300 |
| 0.490-1.705 | 24000/F(kHz) | 30 |
| 1.705-30.0 | 30 | 30 |
| 30-88 | 100 | 3 |
| 88-216 | 150 | 3 |
| 216-960 | 200 | 3 |
| Above 960 | 500 | 3 |

### 3.6.2. Test Procedure

1).The testing follows ANSI C63.10-2020+Cor 1-2023 clause 11.11 & 11.12.

2).The EUT was arranged to its worst case and then tune the antenna tower (from 1 m to 4 m) and turntable (from 0 degree to 360 degrees) to find the maximum reading. A pre-amp and a high pass filter are used for the test in order to get better signal level.

3).The EUT was placed on a turntable with 0.8 meter for frequency below 1GHz and 1.5 meter for frequency above 1GHz respectively above ground.

4).The EUT was set 3 meters from the interference receiving antenna, which was mounted on the top of a variable height antenna tower.

5).Corrected Reading: Antenna Factor + Cable Loss + Read Level - Pre-amp Factor = Level.

6).For testing below 1GHz, if the emission level of the EUT in peak mode was 3 dB lower than the limit specified, then peak values of EUT will be reported, otherwise, the emissions will be repeated one by one using the CISPR quasi-peak method and reported.

7).For testing above 1GHz, the emission level of the EUT in peak mode was 20dB lower than peak limit (that means the emission level in average mode also complies with the limit in average mode), then peak values of EUT will be reported, otherwise, the emissions will be measured in average mode again and reported.

**Use the following spectrum analyzer settings:**

Span shall wide enough to fully capture the emission being measured;

When frequency < 1 GHz:

• Set RBW=100 kHz; VBW ≥ RBW; Sweep = auto; Detector function = peak; Trace = max hold;

When frequency ≥ 1 GHz:

• Set RBW = 1 MHz; VBW = 3 MHz for peak measurement;

• Set RBW = 1 MHz; VBW = 10 Hz, when duty cycle is no less than 98 percent or VBW ≥ 1/T, when duty cycle is less than 98 percent where T is the minimum transmission duration over which the transmitter is on and is transmitting at its maximum power control level for the tested mode of operation.

### 3.6.3. Test Setup

3.6.3.1. For radiated emissions below 30MHz

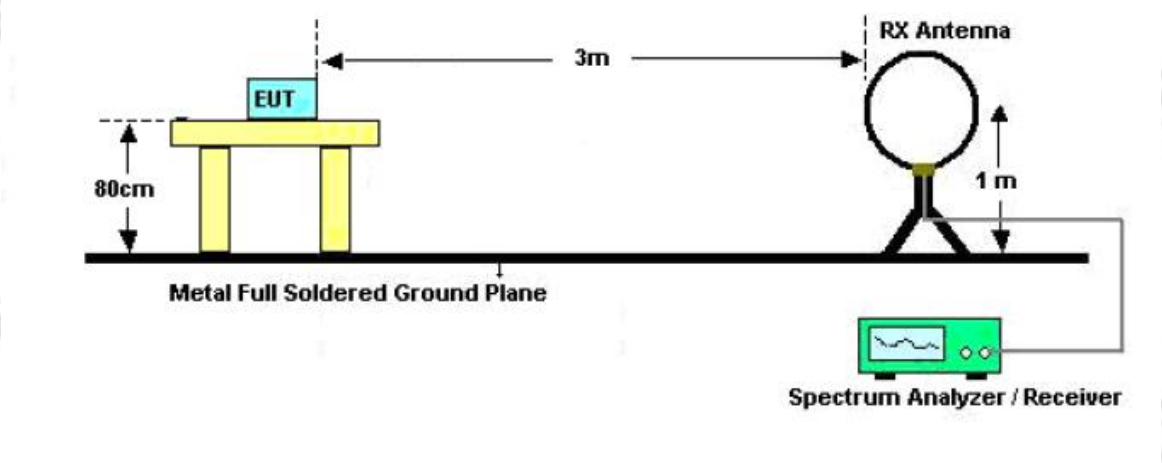


3.6.3.2. For radiated emissions from 30MHz to 1GHz

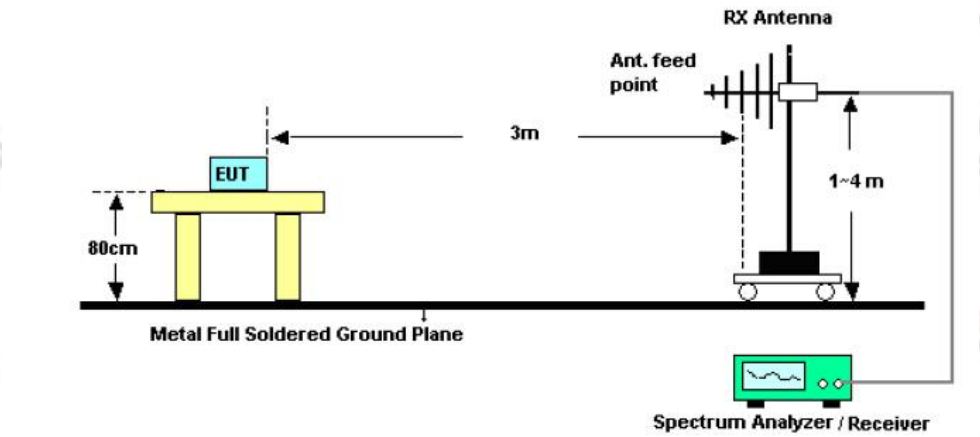


3.6.3.3. For radiated emissions above 1GHz

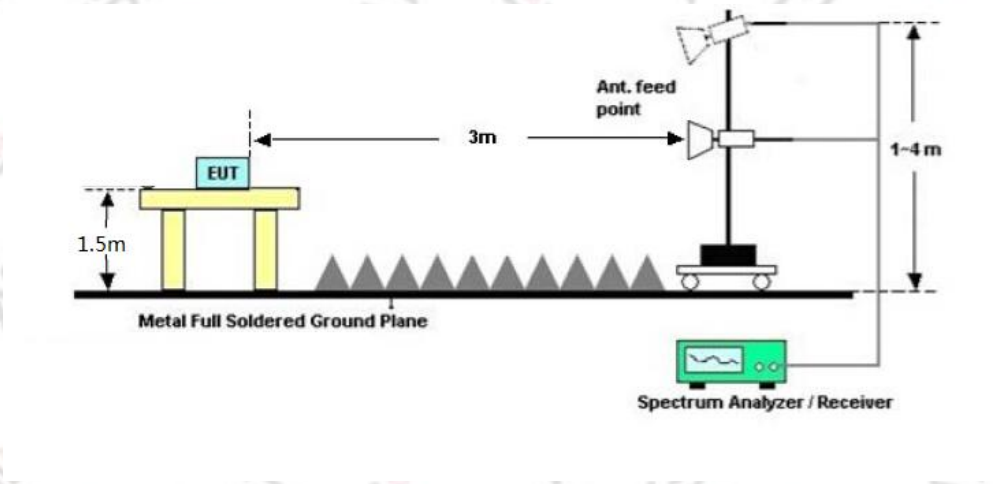

### 3.6.4. Test Result of Radiated Spurious Emission

3.6.4.1. For 9 kHz ~ 30 MHz

Please refer to the Appendix B_Radiated Spurious Emission Data for 5GHz WIFI

3.6.4.2. For 30 MHz ~ 1 GHz

Please refer to the Appendix B_Radiated Spurious Emission Data for 5GHz WIFI

3.6.4.3. For 1 GHz ~ 18GHz

Please refer to the Appendix B_Radiated Spurious Emission Data for 5GHz WIFI

3.6.4.4. For above 18GHz

Please refer to the Appendix B_Radiated Spurious Emission Data for 5GHz WIFI

### 3.6.5. Test Result of Restricted Band

Please refer to the Appendix B_Radiated Spurious Emission Data for 5GHz WIFI

## 3.7. Dynamic Frequency Selection

### 3.7.1.Type of Device

| | |
|---|---|
| Type of Device | ☐Master |
| | ☑Client Without Radar Detection |
| | ☐Client With Radar Detection |

### 3.7.2.DFS Requirements

Applicability of DFS Requirements Prior to Use of a Channel

| Requirement | Operational Mode | | |
|---|---|---|---|
| | Master | Client Without Radar Detection | Client With Radar Detection |
| Non-Occupancy Period | Yes | Not required | Yes |
| DFS Detection Threshold | Yes | Not required | Yes |
| Channel Availability Check Time | Yes | Not required | Not required |
| U-NII Detection Bandwidth | Yes | Not required | Yes |

**Table 3-1: Applicability of DFS Requirements Prior to Use of a Channel**

Applicability of DFS requirements during normal operation

| Requirement | Operational Mode | |
|---|---|---|
| | Master Device or Client with Radar Detection | Client Without Radar Detection |
| DFS Detection Threshold | Yes | Not required |
| Channel Closing Transmission Time | Yes | Yes |
| Channel Move Time | Yes | Yes |
| U-NII Detection Bandwidth | Yes | Not required |

Table 3-2: Applicability of DFS Requirements during normal operation

| Additional requirements for devices with multiple bandwidth modes | Master Device or Client with Radar Detection | Client Without Radar Detection |
|---|---|---|
| U-NII Detection Bandwidth and Statistical Performance Check | All BW modes must be tested | Not required |
| Channel Move Time and Channel Closing Transmission Time | Test using widest BW mode available | Test using the widest BW mode available for the link |
| All other tests | Any single BW mode | Not required |
| Note: Frequencies selected for statistical performance check (Section 7.8.4) should include several frequencies within the radar detection bandwidth and frequencies near the edge of the radar detection bandwidth. For 802.11 devices it is suggested to select frequencies in each of the bonded 20 MHz channels and the channel center frequency. | | |

### 3.7.3.DFS Response Requirement Values

**Table 3-3: DFS Response Requirements**

| Parameter | Value |
|---|---|
| Non-occupancy period | Minimum 30 minutes |
| Channel Availability Check Time | 60 seconds |
| Channel Move Time | 10 seconds (See Note 1.) |
| Channel Closing Transmission Time | 200 milliseconds + an aggregate of 60 milliseconds over remaining 10 second period. (See Notes 1 and 2.) |
| U-NII Detection Bandwidth | Minimum 100% of the U- NII 99% transmission power bandwidth. (See Note 3.) |

### 3.7.4.DFS Detection Thresholds

**Table 3-4: Detection Thresholds for Master Devices and Client Devices with Radar Detection**

| Maximum Transmit Power | Value (See Notes 1, 2, and 3) |
|---|---|
| EIRP ≥ 200 milliwatt | -64 dBm |
| EIRP < 200 milliwatt and power spectral density < 10 dBm/MHz | -62 dBm |
| EIRP < 200 milliwatt that do not meet the power spectral density requirement | -64 dBm |
| Note 1: This is the level at the input of the receiver assuming a 0dBi receive antenna.<br>Note 2: Throughout these test procedures an additional 1 dB has been added to the amplitude of the test transmission wave forms to account for variations in measurement equipment. This will ensure that the test signal is at or above the detection threshold level to trigger a DFS response.<br>Note3: EIRP is based on the highest antenna gain. For MIMO devices refer to KDB Publication 662911 D01. | |

### 3.7.5.Radar Test Wave forms

This section provides the parameters for required test wave forms, minimum percentage of successful detections, and the minimum number of trials that must be used for determining DFS conformance. Step intervals of 0.1 microsecond for Pulse Width, 1 microsecond for PRI, 1 MHz for chirp width and 1 for the number of pulses will be utilized for the random determination of specific test wave forms.

Table 3-5: Parameters for Short Pulse Radar Waveforms

Short Pulse Radar Test Wave forms

| Radar Type | Pulse Width (μsec) | PRI (μsec) | Number of Pulses | Minimum Percentage of Successful Detection | Minimum Number of Trials |
|---|---|---|---|---|---|
| 0 | 1 | 1428 | 18 | See Note1 | See Note1 |
| 1 | | Test A: 15 unique PRI values randomly selected from the list of 23 PRI values in Table 5a | $\text{Roundup}\left\{\left(\frac{1}{360}\right)\cdot\left(\frac{19\cdot 10^6}{\text{PRI}_{\mu sec}}\right)\right\}$ | 60% | 30 |
| | | Test B: 15 unique PRI values randomly selected within the range of 518-3066 μ sec, with a minimum increment of 1 μsec, excluding PRI values selected in Test A | | | |
| 2 | 1-5 | 150-230 | 23-29 | 60% | 30 |
| 3 | 6-10 | 200-500 | 16-18 | 60% | 30 |
| 4 | 11-20 | 200-500 | 12-16 | 60% | 30 |
| Aggregate (Radar Types 1-4) | | | | 80% | 120 |
| Note 1: Short Pulse Radar Type 0 should be used for the detection bandwidth test, channel move time, and channel closing time tests. | | | | | |

A minimum of 30 unique wave forms are required for each of the Short Pulse Radar Types 2 through 4. If more than 30 wave forms are used for Short Pulse Radar Types 2 through 4, then each additional waveform must also be unique and not repeated from the previous wave forms. If more than 30 wave forms are used for Short Pulse Radar Type 1, then each additional waveform is generated with Test B and must also be unique and not repeated from the previous wave forms in Tests A or B.

Pulse Repetition Intervals Values for Test A

| Pulse Repetition Frequency Number | Pulse Repetition Frequency (Pulses Per Second) | Pulse Repetition Interval (Microseconds) |
|---|---|---|
| 1 | 1930.5 | 518 |
| 2 | 1858.7 | 538 |
| 3 | 1792.1 | 558 |
| 4 | 1730.1 | 578 |
| 5 | 1672.2 | 598 |
| 6 | 1618.1 | 618 |
| 7 | 1567.4 | 638 |
| 8 | 1519.8 | 658 |
| 9 | 1474.9 | 678 |
| 10 | 1432.7 | 698 |
| 11 | 1392.8 | 718 |
| 12 | 1355 | 738 |
| 13 | 1319.3 | 758 |
| 14 | 1285.3 | 778 |
| 15 | 1253.1 | 798 |
| 16 | 1222.5 | 818 |
| 17 | 1193.3 | 838 |
| 18 | 1165.6 | 858 |
| 19 | 1139 | 878 |
| 20 | 1113.6 | 898 |
| 21 | 1089.3 | 918 |
| 22 | 1066.1 | 938 |
| 23 | 326.2 | 3066 |

Long Pulse Radar Test Waveform

| Radar Type | Pulse Width (µsec) | Chirp Width (MHz) | PRI (µsec) | Number of Pulses per Burst | Number of Bursts | Minimum Percentage of Successful Detection | Minimum Number of Trials |
|---|---|---|---|---|---|---|---|
| 5 | 50-100 | 5-20 | 1000-2000 | 1-3 | 8-20 | 80% | 30 |

The parameters for this waveform are randomly chosen. Thirty unique waveforms are required for the Long Pulse Radar Type waveforms. If more than 30 waveforms are used for the Long Pulse Radar Type waveforms, then each additional waveform must also be unique and not repeated from the previous waveforms.

Frequency Hopping Radar Test Waveform

| Radar Type | Pulse Width (µsec) | PRI (µsec) | Pulses per Hop | Hopping Rate (kHz) | Hopping Sequence Length (msec) | Minimum Percentage of Successful Detection | Minimum Number of Trials |
|---|---|---|---|---|---|---|---|
| 6 | 1 | 333 | 9 | 0.333 | 300 | 70% | 30 |

For the Frequency Hopping Radar Type, the same *Burst* parameters are used for each waveform. The hopping sequence is different for each waveform and a 100-length segment is selected from the hopping sequence defined by the following algorithm:

The first frequency in a hopping sequence is selected randomly from the group of 475 integer frequencies from 5250 – 5724 MHz. Next, the frequency that was just chosen is removed from the group and a frequency is randomly selected from the remaining 474 frequencies in the group. This process continues until all 475 frequencies are chosen for the set. For selection of a random frequency, the frequencies remaining within the group are always treated as equally likely

### 3.7.6.Test Setup

The FCC KDB 905462 D02 UNII DFS Compliance Procedures New Rules v02 describes a radiated test setup and a conducted test setup. The conducted test setup was used for this testing. Figure 3-1 shows the typical test setup.

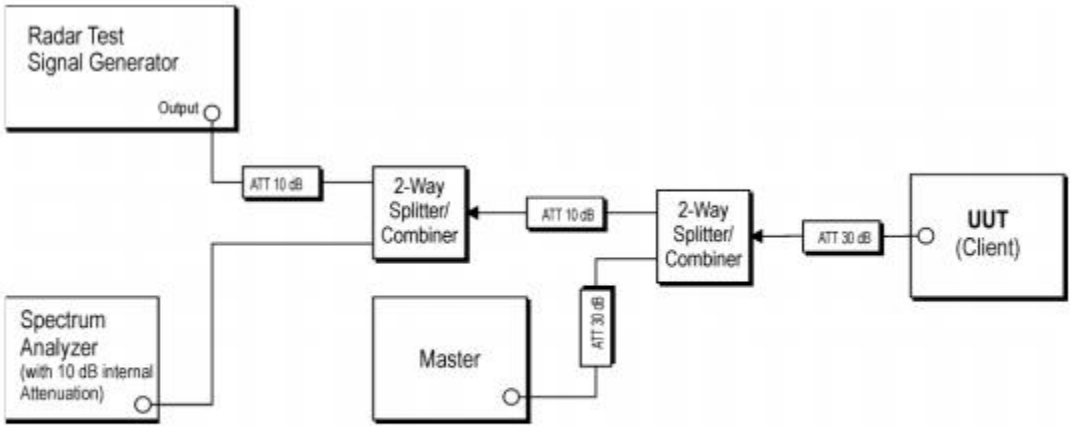


*Figure 4: Example Conducted Setup where UUT is a Client and Radar Test Waveforms are injected into the Client*

### 3.7.7.Test Result of Dynamic Frequency Selection

#### 3.7.7.1.Radar Waveform Calibration:

Calibration Setup:

The conducted test setup was used for this calibration testing. Figure 3-2 shows the typical test setup.

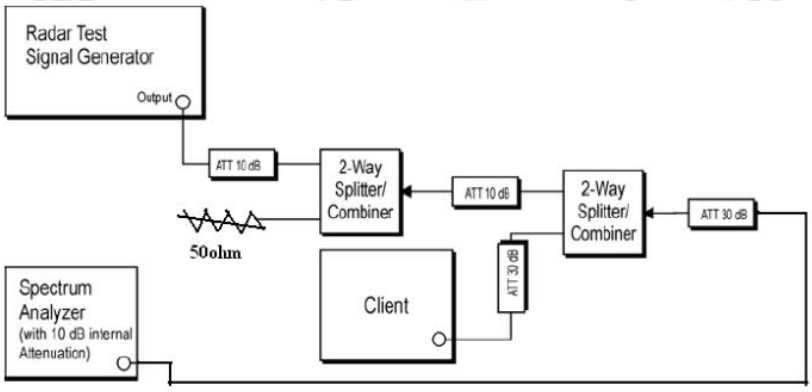


**Figure 3-2: Conducted Test Setup**

Calibration Procedure:

The Interference Radar Detection Threshold Level is (-64dBm) + (3.0) [dBi] - 0.8dB (cable loss )= -61.8dBm for Antenna port 2, that had been taken into account the output power range and antenna gain. The above equipment setup was used to calibrate the conducted Radar Waveform. A vector signal generator was utilized to establish the test signal level for each radar type. During this process there were replace 50ohm terminal form Master and Client device and no transmissions by either the Master or Client Device. The spectrum analyzer was switched to the zero span (Time Domain) at the frequency of the Radar Waveform generator. Peak detection was used. The spectrum analyzer resolution bandwidth (RBW) and video bandwidth (VBW) were set to at least 3MHz. The vector signal generator amplitude was set so that the power level measured at the spectrum analyzer was(-64dBm) + (3.0) [dBi] - 0.8dB (cable loss )= -61.8dBm ,Capture the spectrum analyzer plots on short pulse radar types, long pulse radar type and hopping radar waveform.

**Test Result :**

Not Applicable.(Client Without Radar Detection)

### 3.7.7.2.Test Result of Detection Bandwidth

**Test Limit:**

Minimum 100% of the UNII 99% transmission power bandwidth. During the U-NII Detection Bandwidth detection test, each frequency step the minimum percentage of detection is 90 percent. Measurements are performed with no data traffic.

**Test Procedure:**

1. Adjust the equipment to produce a single Burst of any one of the Short Pulse Radar Types 0-4 in Table 3-5 at the center frequency of the EUT Operating Channel at the specified DFS Detection Threshold level.
2.The generating equipment is configured as shown in the Conducted Test Setup above section 3.8.6
3.The EUT is set up as a stand-alone device (no associated Client or Master, as appropriate) and no traffic. Frame based systems will be set to a talk/listen ratio reflecting the worst case (maximum) that is user configurable during this test.
4.Generate a single radar Burst, and note the response of the EUT. Repeat for a minimum of 10 trials. The EUT must detect the Radar Waveform using the specified U-NII Detection Bandwidth criterion shown in Table 3-5. In cases where the channel bandwidth may exceed past the DFS band edge on specific channels (i.e., 802.11ac or wideband frame based systems) select a channel that has the entire emission bandwidth within the DFS band. If this is not possible, test the detection BW to the DFS band edge.
5.MHz steps, repeating the above test sequence, until the detection rate falls below the U-NII Detection Bandwidth criterion specified in Table 3-3. Repeat this measurement in 1MHz steps at frequencies 5 MHz below where the detection rate begins to fall. Record the highest frequency (denote as FH) at which detection is greater than or equal to the U-NII Detection Bandwidth criterion. Recording the detection rate at frequencies above FH is not required to demonstrate compliance.
6.Starting at the center frequency of the EUT operating Channel, decrease the radar frequency in 1 MHz steps, repeating the above item 4 test sequence, until the detection rate falls below the U-NII Detection Bandwidth criterion. Record the lowest frequency (denote as FL) at which detection is greater than or equal to the U-NII Detection Bandwidth criterion. Recording the detection rate at frequencies below FL is not required to demonstrate compliance.
7.The U-NII Detection Bandwidth is calculated as follows: U-NII Detection Bandwidth = FH – FL
8.The U-NII Detection Bandwidth must be at least 100% of the EUT transmitter 99% power, otherwise, the EUT does not comply with DFS requirements.

**Test Result:**

Not Applicable.(Client Without Radar Detection)

### 3.7.7.3.Test Result of Channel Availability Check (CAC)

**Test Limit:**

(1).The EUT shall perform a Channel Availability Check to ensure that there is no radar operating on the channel. After power-up sequence, receive at least 1 minute on the intended operating frequency.

(2).In beginning of the Channel Availability Check (CAC) Time, radar is detected on this channel, select another intended channel and perform a CAC on that channel.

(3).In the end of Channel Availability Check (CAC) Time, radar is detected on this channel, select another intended channel and perform a CAC on that channel.

**Test Procedure:**

**Channel Availability Check :**

(1).The U-NII devices will be powered on and be instructed to operate on the appropriate U-NII Channel that must incorporate DFS functions. At the same time the EUT is powered on, the spectrum analyzer will be set to zero span mode with a 3 MHz RBW and 3 MHz VBW on the Channel occupied by the radar (Chr) with a 2.5 minute sweep time. The spectrum analyzer's sweep will be started at the same time power is applied to the U-NII device.

(2).The EUT should not transmit any beacon or data transmissions until at least 1 minute after the completion of the power-on cycle.

(3).Confirm that the EUT initiates transmission on the channel. Measurement system showing its nominal noise floor is marker1.

**Beginning of the Channel Availability Check Time:**

(1).The steps below define the procedure to verify successful radar detection on the selected Channel during a period equal to the Channel Availability Check Time and avoidance of operation on that Channel when a radar Burst with a level equal to the DFS Detection Threshold occurs at the beginning of the Channel Availability Check Time

(2).The EUT is in completion power-up cycle (from T0 to T1). T1 denotes the instant when the EUT has completed its power-up sequence. The Channel Availability Check Time commences at instant T1 and will end no sooner than T1 + 60 seconds. A single Burst of one of Short Pulse Radar Types 0-4 at DFS Detection Threshold will commence within a 6 second window starting at T1.

(3).Visual indication on the EUT of successful detection of the radar Burst will be recorded and reported. Observation of emissions will continue for 2.5 minutes after the radar Burst has been generated. Verify that during the 2.5 minutes measurement window no EUT transmissions occurred.

**End of the Channel Availability Check Time：**

(1).The steps below define the procedure to verify successful radar detection on the selected Channel during a period equal to the Channel Availability Check Time and avoidance of operation on that Channel when a radar Burst with a level equal to the DFS Detection Threshold occurs at the beginning of the Channel Availability Check Time.

(2).The EUT is powered on at T0. T1 denotes the instant when the EUT has completed its power-up sequence. The Channel Availability Check Time commences at instant T1 and will end no sooner thanT1 + 60 seconds. A single Burst of one of Short Pulse Radar Types 0-4 at DFS Detection Threshold will commence within a 6 second window starting at T1+ 54 seconds.

(3).Visual indication on the EUT of successful detection of the radar Burst will be recorded and reported. Observation of emissions will continue for 2.5 minutes after the radar Burst has been generated. Verify that during the 2.5 minutes measurement window no EUT transmissions occurred.

**Test Result:**

Not Applicable.(Client Without Radar Detection)

### 3.7.7.4.Test Result of Channel Move Time and Channel Closing Transmission Time

**Test Limit:**

The EUT has In-Service Monitoring function to continuously monitor the radar signals. If the radar is detected, must leave the channel (Shutdown). The Channel Move Time to cease all transmissions on the current channel upon detection of a Radar Waveform above the DFS Detection Threshold within 10 sec. The total duration of Channel Closing Transmission Time is 260ms, consisting of data signals and the aggregate of control signals, by a U-NII device during the Channel Move Time. The Non-Occupancy Period time is 30 minute during which a Channel will not be utilized after a Radar Waveform is detected on that Channel.

**Test Procedure:**

(1).The test should be performed with Radar Type 0. The measurement timing begins at the end of the Radar Type 0.

(2).When the radar burst with a level equal to the DFS Detection Threshold + 1dB is generated on the Operating Channel of the U-NII device. A U-NII device operating as a Master Device will associate with the Client Device at Channel. Stream the MPEG test file from the Master Device to the Client Device on the selected Channel for the entire period of the test. At time T0 the Radar Waveform generator sends a Burst of pulses for each of the radar types at Detection Threshold .

(3).Observe the transmissions of the EUT at the end of the radar Burst on the Operating Channel. Measure and record the transmissions from the EUT during the observation time (Channel Move Time)

(4).Measurement of the aggregate duration of the Channel Closing Transmission Time method. With the spectrum analyzer set to zero span tuned to the center frequency of the EUT operating channel at the radar simulated frequency, peak detection, and max hold, the dwell time per bin is given by: Dwell (1.5ms) = S (12 sec) / B (8000); where Dwell is the dwell time per spectrum analyzer sampling bin, S is the sweep time and B is the number of spectrum analyzer sampling bins. An upper bound of the aggregate duration of the intermittent control signals of Channel Closing Transmission Time is calculated by: C = N X Dwell; where C is the Closing Time, N is the number of spectrum analyzer sampling bins showing a U-NII transmission and Dwell is the dwell time per bin.

(5).Measure the EUT for more than 30 minutes following the channel close/move time to verify that the EUT does not resume any transmissions on this Channel.

**Test Result:**

Not Applicable.(Client Without Radar Detection)

### 3.7.7.5.Test Result of Statistical Performance Check

**Test Limit:**

The minimum percentage of successful detection requirements found in below table when a radar burst with a level equal to the DFS Detection Threshold + 1dB is generated on the Operating Channel of the U-NII device (In- Service Monitoring).

| Radar Type | Minimum Number of Trails | Detection Probability |
|---|---|---|
| 0 | 30 | Pd > 60% |
| 1 | 30(15 of test A and 15 of test B) | Pd > 60% |
| 2 | 30 | Pd > 60% |
| 3 | 30 | Pd > 60% |
| 4 | 30 | Pd > 60% |
| Aggregate (Radar Types 1-4) | 120 | Pd > 80% |
| 5 | 30 | Pd > 80% |
| 6 | 30 | Pd > 70% |

The percentage of successful detection is calculated by:
(Total Waveform Detections / Total Waveform Trails) * 100 = Probability of Detection Radar Waveform In addition an aggregate minimum percentage of successful detection across all Short Pulse Radar Types 1-4 is required and is calculated as follows: (Pd1 + Pd2 + Pd3 + Pd4) / 4

**Test Procedure:**

(1).Stream the MPEG test file from the Master Device to the Client Device on the test Channel for the entire period of the test.
(2).At time T0 the Radar Waveform generator sends the individual waveform for each of the Radar Types 1-6, at levels equal to the DFS Detection Threshold, on the Operating Channel.
(3).Observe the transmissions of the EUT at the end of the Burst on the Operating Channel for duration greater than 10 seconds for Short Pulse Radar Types 0 to ensure detection occurs.
(4).Observe the transmissions of the EUT at the end of the Burst on the Operating Channel for duration greater than 22 seconds for Long Pulse Radar Type 5 to ensure detection occurs.
(5).The device can utilize a test mode to demonstrate when detection occurs to prevent the need to reset the device between trial runs.
(6).The Minimum number of trails, minimum percentage of successful detection and the average minimum percentage of successful detection are found in below table.

**Test Result:**

Not Applicable.(Client Without Radar Detection)

## 3.8. AC Power-Line Conducted Emission

### 3.8.1.Limit

*47 CFR 15.207(a)*: For an intentional radiator that is designed to be connected to the public utility (AC) power line, the radio frequency voltage that is conducted back onto the AC power line on any frequency or frequencies, within the band 150 kHz to 30 MHz, shall not exceed the limits in the following table:

| Frequency of emission (MHz) | Conducted limit (dBμV) | |
|---|---|---|
| | Quasi-peak | Average |
| 0.15-0.5 | 66 to 56* | 56 to 46* |
| 0.5-5 | 56 | 46 |
| 5-30 | 60 | 50 |

*Decreases with the logarithm of the frequency.

### 3.8.2.Test Procedure

1).The EUT was placed 0.4 meter from the conducting wall of the shielding room was kept at least 80 centimeters from any other grounded conducting surface.

2).Connect EUT to the power mains through a line impedance stabilization network (LISN).

3).All the support units are connecting to the other LISN.

4).The LISN provides 50 ohm coupling impedance for the measuring instrument.

5).The FCC states that a 50 ohm, 50 microhenry LISN should be used.

6).Both sides of AC line were checked for maximum conducted interference.

7).The frequency range from 150 kHz to 30 MHz was searched.

8).Set the test-receiver system to Peak Detect Function and specified bandwidth (IF Bandwidth = 9 kHz) with Maximum Hold Mode. Then measurement is also conducted by Average Detector and Quasi-Peak Detector Function respectively.

### 3.8.3.Test Setup

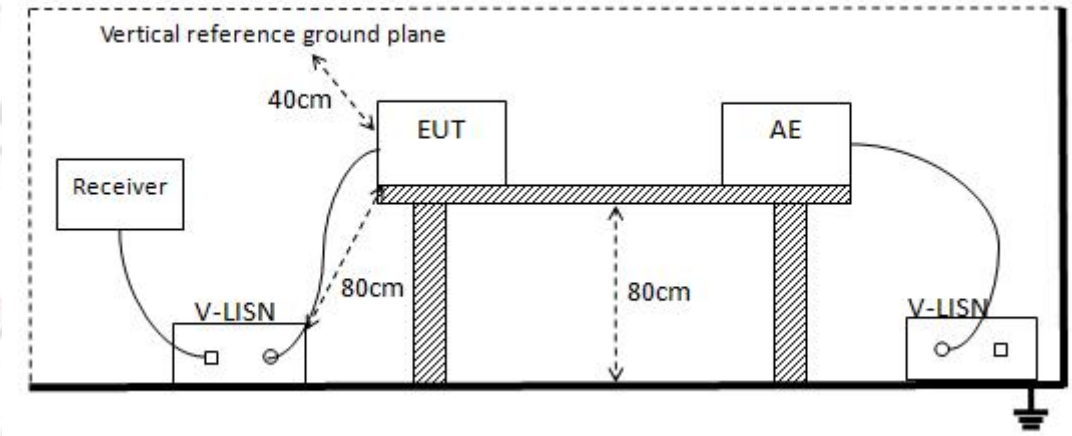


### 3.8.4.Test Result of AC Power-Line Conducted Emission

Please refer to the Appendix B_Radiated Spurious Emission Data for 5GHz WIFI

## 3.9. Transmit Power Control

### 3.9.1.Standard Requirement

The U-NII device is required to have the capability to operate at least 6 dB below the mean EIRP value of 30 dBm.

### 3.9.2.Test Procedure

KDB 789033 D02v02r01- Section E)3)b) Method PM-G

### 3.9.3.Test Setting

Average power measurements were performed only when the EUT was transmitting at its maximum power control level using a broadband power meter with a pulse sensor. The power meter implemented triggering and gating capabilities which were set up such that power measurements were recorded only during the ON time of the transmitter. The trace was averaged over 100 traces to obtain the final measured average power.

### 3.9.4.Test Setup

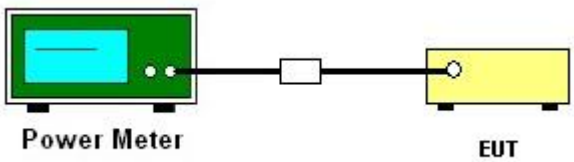


### 3.9.5.Test Result

Not Applicable.

## 3.10. Antenna Requirement

### 3.10.1.Standard Requirement

According to *47 CFR 15.203*, an intentional radiator shall be designed to ensure that no antenna other than that furnished by the responsible party shall be used with the device.

### 3.10.2.EUT Antenna

The antenna used for the EUT is PIFA Antenna, which meets the antenna requirements.

# 4. Test Setup Photographs

Please refer to the Appendix C.

# 5. External And Internal Photos of The EUT

External Please refer to the Appendix D.

Internal Please refer to the Appendix D.

※※※※※END OF THE REPORT※※※※※