GENUINE PARTS & ACCESSORIES

Bluetooth Soundbar
Owner's Manual

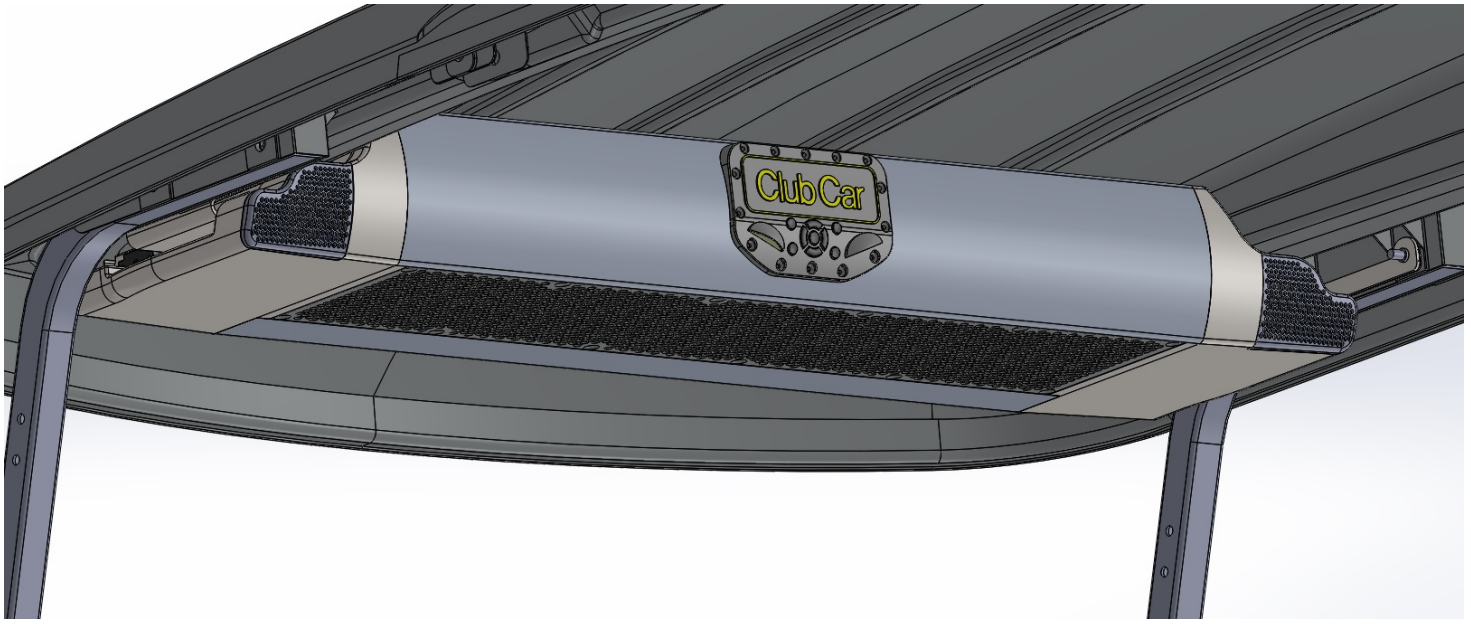

Bluetooth Soundbar

Congratulations on your purchase of this Bluetooth Soundbar! This Bluetooth Soundbar is designed to work with most Bluetooth enabled phones, tablets and Apps. The Soundbar provides passengers with a high performance audio experience. Please read the directions that follow to familiarize yourself with the product to ensure that you obtain the best results from your Bluetooth Soundbar.

Safety Precautions:

1. Do not operate the Bluetooth Soundbar while driving the golf cart. Safe driving and the consideration of others should always be considered.
2. Enjoy your Bluetooth Soundbar but remember that the safety of all passengers remains the number one priority.

Important Notices:

1. Installation of Bluetooth Soundbar requires careful planning and preparation. Follow all instructions while attempting to install.
2. It is recommended that two people are used for the installation, for safety and to avoid damage to the cart or Soundbar.
3. Do not disassemble or adjust the Soundbar.
4. Do not use any abrasive or solvent-based cleaners. These may scratch or damage the surface of the Bluetooth Soundbar.
5. Do not use a pressure washer to clean the Bluetooth Soundbar. Direct contact can damage the speakers.

For Further Questions, Please call Club Car Customer Service 1-888-CLUB-CAR (258-2227).

Control Diagram

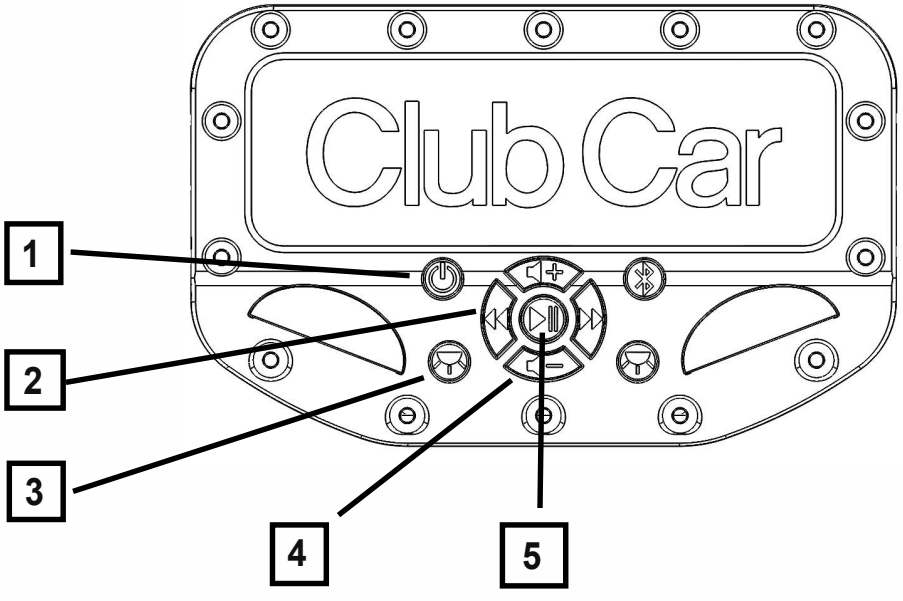

1. **Power Button:** Press to turn unit on or off. Illuminated red in standby mode. Illuminated green in power on mode.
2. **Skip Back:** Press to skip back, press and hold for fast rewind. Illuminated white when Soundbar is on.
3. **Left Dome Light:** Press to turn on or off the left dome light. Illuminated white when the cart's ignition key is in the ON position.
4. **Volume Down:** Press to turn the local soundbar volume down. Illuminated white when Soundbar is on.
5. **Play /Pause:** Press to play or pause current track. Illuminated white when Soundbar is on.

NOTE: Not all features are supported by all phones and apps. Some features such as skip and fast forward may not work, depending on the phone and music app being used. The volume up and down buttons control the Soundbar's internal volume level. Your Bluetooth device has an independent volume level control. You may need to set the volume control on both devices to achieve an optimum volume level. For more information, see detailed instructions on page 7.

Control Diagram - Continued

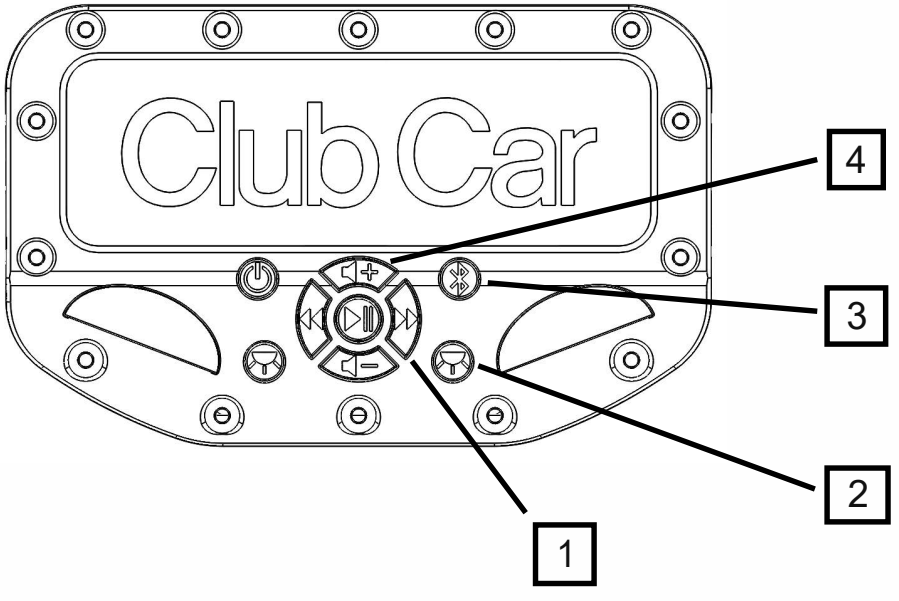

1. **Skip Forward:** Press to skip forward, press and hold for fast forward. Illuminated white when Soundbar is on.
2. **Right Dome Light:** Press to turn on or off the right dome light. Illuminated white when the cart's ignition key is in the ON position.
3. **Bluetooth:** Press to activate pairing mode. Illuminated blue when actively linked to a Bluetooth device. Blinks blue fast when in active pairing mode.
4. **Volume Up:** Press to turn the local soundbar volume up. Illuminated white when Soundbar is on.

NOTE: Not all features are supported by all phones and apps. Some features such as skip and fast forward may not work, depending on the phone and music app being used. The volume up and down buttons control the soundbar's internal volume level. Your Bluetooth device has an independent volume level control. You may need to set the volume control on both devices to achieve an optimum volume level. For more information, see detailed instructions on page 7.

Getting Started

Features:

Your Club Car Soundbar is equipped with:

- Bluetooth wireless technology with APTx technology delivers high quality sound from your smartphone, tablet, or other compatible device.
- Dual independent dome lights with consistent lighting across the cart's front seating area.
- A high efficiency Class-D 4 channel power amplifier that allows for long battery life even at high volume levels.
- A high fidelity audio DSP with custom tuned equalization, active crossovers and limiters that provide an immersive audio experience.
- Two Long throw subwoofers and three long throw passive radiators deliver powerful bass.
- An auxiliary 3.5mm stereo output allows you to connect external speakers such as a subwoofer.
- Waterproof and dust proof IP66 rating protects your soundbar from a variety of environmental hazards.

Quick Start Guide:

- Turn on the ignition in your Club Car cart.
- Press the power button on the upper left hand corner of the control panel. See Control Panel Diagram for reference.
- Press the Bluetooth button in the upper right corner of the control panel. See Control Panel Diagram for reference.
- Search for the Club Car Soundbar with your Bluetooth device.
- Pair to the "CC-BT-Soundbar" in your device's list.
- Play local or streaming audio from your Bluetooth device.

Getting Started

Features Continued:

Powering on your Bluetooth Soundbar:

- The Club Car Soundbar may be powered on any time the ignition key is turned on. When the Soundbar is in STANDBY mode the power button (upper left corner) will be illuminated red. Press the button to turn on the Soundbar. In ON mode the power button will be illuminated green and the center rosette buttons will be illuminated white. If the Soundbar has been paired to a local active Bluetooth device it will automatically search for and reconnect to that device. See “Bluetooth Wireless Technology” for more information on pairing and using your Bluetooth device.

Volume Control:

There are two ways to control the output volume of your Club Car Soundbar:

- Your Bluetooth device has a media playback volume control. This allows your device (such as a tablet or smartphone) to set the output volume that is transmitted to the Soundbar. Ideally this volume setting should be in the middle of the available volume range.
- The Club Car Soundbar has a local volume control that is independent of your Bluetooth device. This is controlled by the Volume UP and DOWN buttons on the control panel. The Soundbar’s volume control sets the local output level in 11 steps. There is an audible beep when the volume up or down buttons are pressed, and a unique tone when the maximum volume is reached.

It is generally recommended to set the Club Car Soundbar’s volume control and your Bluetooth devices volume control in the middle of their ranges. If you set the Soundbar’s volume control too low then you may not be able to reach your preferred volume level, even with your phone’s volume set to maximum. If this happens, simply press the Volume UP button on the Soundbar’s control panel to increase the sound level to your preferred volume.

Dome Lights:

There are two independently controlled dome lights, aimed at the front left and right seating areas. Press the button to turn each dome light on and off separately. Do not look directly at the dome lights when in use, as this may cause permanent retinal damage.

- On gas-powered carts the dome light buttons will always be illuminated, and may be turned on and off even if the ignition switch is off.
- On electric carts the dome light buttons will not be illuminated, and the dome lights will be inactive unless the ignition switch is turned on.

Getting Started

Features Continued:

Bluetooth Wireless :

To use your Bluetooth device with your Club Car Bluetooth Soundbar, you must first pair your device with your Soundbar. Pairing creates a data link between your Bluetooth device and the Soundbar. This allows your Bluetooth device to transmit audio and receive certain commands such as play, pause and skip. You only have to pair your Soundbar with your Bluetooth device once. After you have paired the devices, you just need to select "CC-BT-SoundBar" from your paired device list to make the connection. The Soundbar can store up to 8 Bluetooth devices in memory. If more than 8 devices are paired with the Soundbar, the oldest paired device is dropped from the list. If this happens you may need to re-pair your device to the Soundbar.

Pairing a Bluetooth device to the Soundbar:

- To initiate pairing, press the Bluetooth button in the upper right corner of the control panel. See Control Diagram for reference.
- The button will blink blue rapidly for 30 seconds. While the button is blinking, initiate the Bluetooth search function on your Bluetooth device. On some phones you may need to turn off and on the Bluetooth feature to initiate a search mode. If necessary, press "SCAN" to search for the Soundbar. Consult your device's manual for specific instructions.
- When the Club Car Soundbar is discovered it will be listed as "CC-BT-SoundBar" in the available devices list. Select it to initiate pairing.
- After a short delay (up to about 5 seconds), the two devices should be connected. You will hear a brief tone from the Soundbar to indicate successful pairing. The Bluetooth button will be a steady blue to indicate it is paired and active.
- If the pairing was unsuccessful, or was not completed within 30 seconds, press the Bluetooth button on the Soundbar and repeat the above steps.
- Some Bluetooth devices may ask for a passcode. If it does, enter "0000".

Disconecting a Bluetooth device to the Soundbar:

- Turn off or disconnect the Bluetooth feature on your Bluetooth device.
- Turn off the Soundbar.

Getting Started

Features Continued:

Automatic Reconnection:

- Turn on your device's Bluetooth function.
- Turn on the Soundbar.
- The Soundbar will search for devices in the paired list of up to 8 devices. After pairing to one of the devices you will hear a brief tone and the Bluetooth button will be illuminated solid blue.
- NOTE: Bluetooth reconnection happens on a "first come, first served" basis, so whichever device responds quickest or has the strongest Bluetooth signal will be reconnected. For example, if 4 phones are paired, nearby and active when the Soundbar is turned on, the Soundbar will scan for all 4 devices. Whichever phone responds the fastest will be reconnected. If you wish to connect to a specific device out of the 4 available devices, simply turn off the Bluetooth feature on the other 3 devices. You may also manually reconnect per the below instructions.

Manually reconnecting or changing the active Bluetooth device:

- Turn on the Bluetooth function on your device. See your device's manual for instructions.
- Your device will display a list of devices available to pair and connect.
- Select "CC-BT-SoundBar" to initiate the connection.
- After a short delay the devices will be connected. You will hear a brief tone and the Bluetooth button will be illuminated solid blue.
- By using this process, the previously connected Bluetooth device will be disconnected.

Getting Started

Features Continued:

Auxiliary Output (optional):

The Club Car Soundbar is equipped with an auxiliary stereo 3.5mm output, located on the driver's side of the soundbar. If you would like to add an external speaker system, such as a subwoofer, you may use the stereo AUX output. To access the AUX output remove the two small screws holding the rubber plug in place. Remove the rubber plug from the Soundbar. Pierce the center section with an awl, small knife or small Philips screwdriver. Insert your 3.5mm stereo connector through the center section of the rubber plug. Insert the 3.5mm connector into the stereo jack inside the Soundbar. Slide the rubber plug back in place to provide a watertight seal around the 3.5mm wire. Install the two screws to hold the rubber plug in place. See Auxiliary Output diagrams for reference.

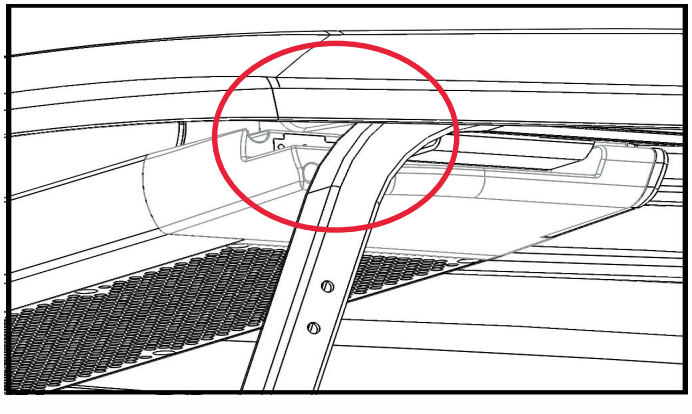

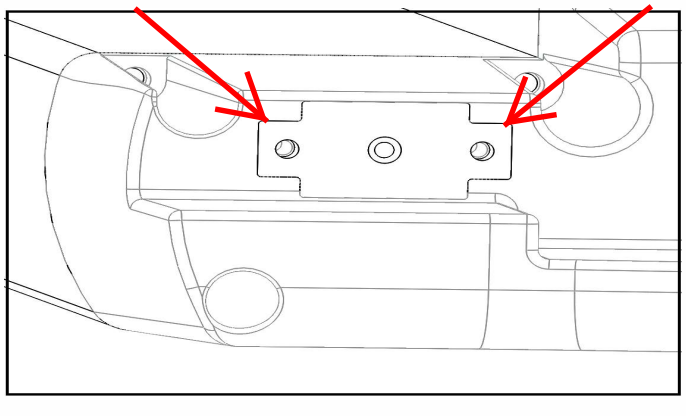

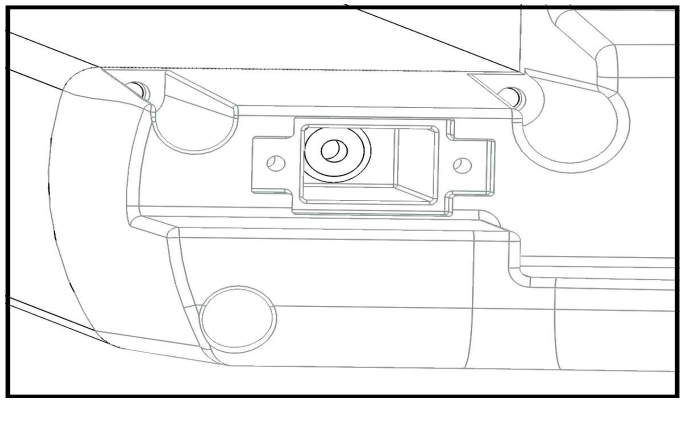

Specifications

Power Requirements: 12-15VDC

Fuse: 7.5A ATC

Driver Complement:

- **Subwoofers: (2) 5.25" Polypropylene Woofers, (3) 5.25" Polypropylene Passive Radiators**
- **Midranges: (2) 2" (50mm) Aluminum Cone Midranges**
- **Tweeters: (2) 0.5" (13mm) Titanium Dome Tweeters**

Frequency Response: 60Hz - 20kHz +/-3db

Power Output @ 14.4VDC:

- **25W RMS x 4 channels @ 10% THD**
- **50W Peak x 4 channels @ 10% THD**
- **200W Peak Music Power Output**

AUX Output: 3.5mm Stereo Line Level Output, 600 ohm nominal impedance (driver's side)

Specifications subject to change without notice.

Compliance Information

FCC Statement

- 1. This device complies with Part 15 of the FCC Rules.
  Operation is subject to the following two conditions:
  (1) This device may not cause harmful interference.
  (2) This device must accept any interference received, including interference that may cause undesired operation.
- 2. Changes or modifications not expressly approved by the party responsible for compliance could void the user's authority to operate the equipment.
  NOTE: This equipment has been tested and found to comply with the limits for a Class B digital device, pursuant to Part 15 of the FCC Rules. These limits are designed to provide reasonable protection against harmful interference in a residential installation.

This equipment generates uses and can radiate radio frequency energy and, if not installed and used in accordance with the instructions, may cause harmful interference to radio communications. However, there is no guarantee that interference will not occur in a particular installation. If this equipment does cause harmful interference to radio or television reception, which can be determined by turning the equipment off and on, the user is encouraged to try to correct the interference by one or more of the following measures:

- Reorient or relocate the receiving antenna.
- Increase the separation between the equipment and receiver.
- Connect the equipment into an outlet on a circuit different from that to which the receiver is connected.
- Consult the dealer or an experienced radio/TV technician for help.

FCC Radiation Exposure Statement

This equipment complies with FCC radiation exposure limits set forth for an uncontrolled environment. This equipment should be installed and operated with minimum distance of 20 centimeters between the radiator and your body.

Bluetooth™

The Bluetooth® word mark and logos are registered trademarks owned by Bluetooth SIG, Inc. and any use of such marks is under license. Other trademarks and trade names are those of their respective owners.