MACVON

USER GUIDE

Contents

Safety Information

Safety Precautions

Grounding (earthing) Instructions

Installation

Safety Prompts

Before Use

Warm-up Exercises

During Use

After Use

Specifications

Machine Specifications

Arm Specifications

Functions and Characteristics

Keep in connection

Account Management

Personalized Experiences

Get to know the Product

Get to know the coaches

Free Usage Mode

Turning on/off the Weight

Servicing and Maintenance

Cleaning

Cleaning Accessories

Software Maintenance

Warranty and Support

Safety Information

Thank you for purchasing our product.

Please read through the instructions carefully before using this product.

Safety Precautions

□□Warning

Before using the machine, please consult with your doctor about whether your body's ability to withstand this training product's strength. Never overexert yourself, and if you feel dizzy or fatigue, please stop training.

The correct use of the product will ensure your safety. Please follow the following operations for correct use:

1) Please use as instructed and never disassemble or remove any attached components.
2) Incorrect use or excess training may result in injury.
3) Strenuous exercises should be performed at least 40 minutes after eating.
4) Please wear appropriate clothes and shoes.
5) The weight system of this product is provided for adult use only; children should not use the product's weight system.
6) When using the product, keep children away to prevent injuries.
7) The product is used indoors only and shall not be used outdoors.
8) Please keep the machine in a well-circulated location indoors and away from moisture and water.
9) The machine is a dedicated appliance and thus shall not be refitted for other purposes.
10) The power plug must be reliably grounded using an outlet with a circuit breaker, and should not be shared with other electric appliances.
11) When the product is connected to a power source, the ground wire of the power source must be in good condition to avoid risk of electric shock.
12) Never cover the power cord or put the power cord close to any heat source of high temperature to avoid risk of fire or electric shock.
13) Never extend the power cord or replace the power plug with anything other than one provide by the manufacturer or authorized reseller.
14) If the power cord is damaged, please purchase a new one from the manufacturer or an authorized dealer.
15) Repair shall only be carried out when un-plugged.
16) If the flexible wire is damaged, stop using the product immediately. The wire must be replaced by the manufacturer, or an authorized service professional to avoid injury.
17) Turn off the machine and unplug it if it is unused for long periods of time. Never forcefully

pull out the power cord.

18) In a case of disuse, please place it out of reach of the children.
19) Never insert any foreign articles into any positions of the appliance.
20) Never cover the machine. Excessive high temperatures may cause fire, electric shock, or personal injury.

Grounding (Earthing) Instructions

Caution: This electric fitness device can be used only when connected to a proper grounded (earthing) socket (see diagram below).

The product must be grounded (earthed). In case of any anomaly or failure, grounding can minimize the risk of electric shock.

The original plug of the product is provided with a groundedconductor. For safety, the plug must be inserted into the corresponding groundedpower socket. The grounded plug must be inserted into a socket that is mounted and grounded according to the local regulations.

1) The product is applicable to 120v circuits. To reduce the risk of damaging the important components of the product, your product is only limited to a 20-amp circuit without any branches.

Danger:

Electric leakage may occur if not used as instructed. When you cannot be sure if the product is correctly earthed, please consult with a professional electrician. If the plug of the product is not well-matched with the power socket of your house, please consult with a professional electrician. Do not remove the original plug of the product .

Please refer to the following wiring diagram of the product:

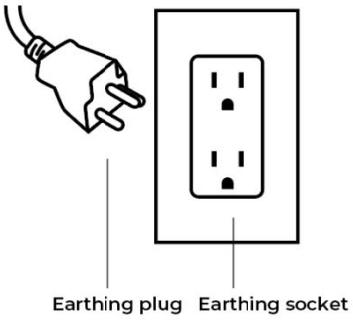
Earthing plug
Earthing socket

Installation

Notice: before installation is completed, never power on the machine.

The product must be professionally installed. Never try to install or uninstall it by yourself, or install or move the machine without the guidance of the authorized installation personnel. Incorrect installation may result in damage to the product or deteriorated function. Incorrect installation may also result in severe injury or death. If you want to install, move or remove the product, please contact our customer service.

Never use the machine unless the installation is confirmed by the professional installation personnel.

The product should only be used indoors. Keep the machine away from water and avoid moist or humid environments.

The product is provided only for consumer use unless otherwise authorized.

Safety Prompts

2) Notice: Before you start any exercises, please consult with your doctor or training professional. During exercise, if you feel chest pain, nausea, dizzy or short of breath, please stop exercising immediately and contact your doctor.The machine should be placed and used in an indoor environment with a controllable temperature. If the machine is in an excessively low or high temperature environment, we strongly recommend you bring the machine to room temperature before starting your first use, otherwise, the electrical components will aged faster than in normal conditions.

Maintenance and Routine Check

1) Before using the product, please carefully check any signs of damage or wear; if you feel there is any problem with the product, or you are not sure about it, please stop using the machine and contact our customer service.

2) Never place any liquid, excessively high/low temperature article, or heavy load on the machine.

3) Please keep the manual and warning labels for future reference; in case the manual is lost or the warning labels are damaged or torn off, please contact our customer service.

4) If any component is damaged or worn out, it should be replaced in time. Never try to repair or replace the component on yourself – please contact our customer service to professional technicians to carry out any repair work.

5) Never use a damaged machine, as severe injury or death may occur.

6) If the machine is not working, do not use the machine and contact our customer service; you should not use the machine until the repair is completed. Measures should be taken to ensure others who possibly touch the machine are aware and kept away from the machine until the machine is restored to good working condition.

7) When you find the machine is not working, please shut down the machine, turn off the power source and remove the plug.

8) Do not hit the screen, housing and other components forcefully or the functions of the machine may be affected.

9) Do not use the machine When the power cord or power plug is damaged or the insertion hole of the socket is loosened, , otherwise, electric shock, short circuit or fire may occur.

10) It is forbidden to dismount, repair or move the machine by yourself because the risk of personal injury resulting from mechanical failures.

11) If you do not know how to operate the product, please contact our customer service to obtain instructions on safety and correct operations.

Supported Use

1) If the machine is correctly installed and used, the user may lift a maximum of 220 pounds, with 110 pounds for one arm.
2) Please use the original parts of the manufacturer and never use any third-party accessories; Never refit the machine or repair or dismount the machine by yourself, otherwise your warranty may be invalidated. Further, abnormal functions may occur and possibly cause harm or death to the user.
1. 3) The components of the products are connected by a dedicated T-shaped lock key. Although the key may be compatible with a third party accessory, the quality and safety of the third party accessory cannot be guaranteed.
3) Do not position yourself under a moving arm.

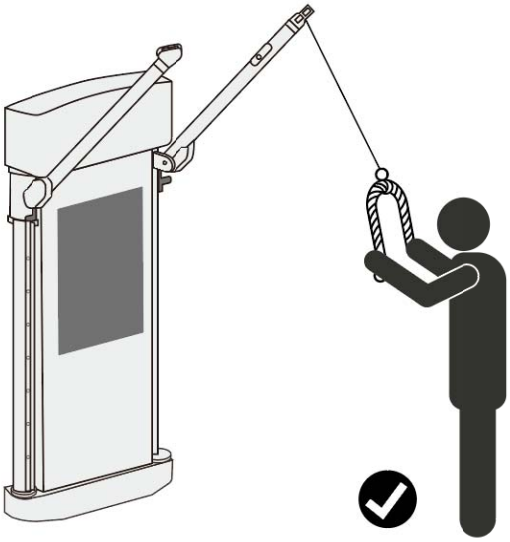

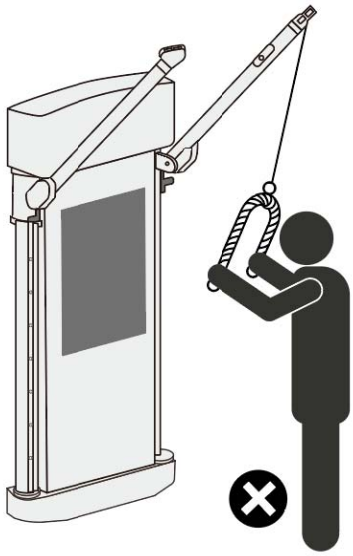

Unsupported use and Product Misuse

1) Do not hang on the arm; do not hang anything on the arm or any position of the product.
2) The product arms and weight system is specially designed for adults only. Children under 15 years old should not be allowed to use the product, and those older than 15 should be supervised by an adult and use the product mildly according to the safety and operating instructions of this manual..
3) Parents must take responsibility to protect the safety of their own children. Keep the children away from any part of the product because the product contains parts, assemblies or functions that may bring severe injury or death.
4) Parents must take responsibility to protect the safety of their own children.
5)
6) Those with physical, mental and emotional considerations, such as autism, amputees, blind or deaf, may use the product under the guidance of doctors or professionals.
7) The product shall only be used in combination with tested or approved applications, programs, or supportive tools. Although some third-party programs and tools may be compatible with the product, we cannot guarantee they are safe for use. Use of third-party accessories and tools that have not been authorized may damage the machine and affect its functions , and may even lead to injury or death.

Before use

3) Before starting exercise with this product, please read through the product manual carefully and use product as instructed.
4) The product is not applicable to all people. Before training, please consult with a training professional or doctor to make sure your body is fit for training especially if your training has been interrupted for a long period of time or your age exceeds 65. Incorrect or excess training may result in severe injury or death.
5) If you are taking a drug that may affect your heart rate, please consult with your doctor before using the product.
6) Please wear appropriate clothes, shoes, and the like.
7) Please check the surrounding environment to keep children or animals away to avoid injury. A 7' x 7' space is recommended in front of the machine for safe use.
8) Read the instructions so you are familiar with how to control the product before using it.
9) Please select your proper weight and estimate a force that you can withstand to avoid any possible injury.
10) 10)
11) It is recommended to do some warm-up exercises before using the product..

Warm-up Exercises

Before training, we recommend you do some stretching exercisesfor 5-10 minutes. Below are some stretching exercises you can conduct – we recommend five times for each, and 10 seconds or more for each leg; then repeat.

1) **Downward stretch:** bend your knees slightly to bend your body forward, relax your back and shoulders to touch your toes with your hands if possible; keep it for 10-15 seconds and then relax; repeat the above three times.

2) **Hamstring stretch:** sit on a clean mat, straighten one leg and bend the other leg inwardly to closely bring the leg onto the inner side of the straightened one; try to touch your toes with your hands as possible; keep it for 10-15 seconds and then relax; repeat the above three times for each leg.

3) **Calf and heel stretch**: stand with two hands on wall or similar surface and position one foot back; lean toward the wall with the back leg straightened and the heel on ground; keep it for 10-15 seconds and then relax; repeat the above three times for each leg.

4) **Quadriceps stretch**: with your left hand on a wall or table for balance, stretch your right hand

backward and grasp your right heel to slowly pull it toward your hips until you feel the muscles in the front of your thighs tensioned; keep it for 10-15 seconds, and then relax; repeat the above three times for each leg.

5) **Sartorius (muscles at the inner side of the thighs) stretch**: sit with your foot soles opposed to each other and knees facing outward; grasp your feet with both hands and pull them toward groin; keep it for 10-15 seconds and the relax; repeat the above three times.

During Use

1) Wear appropriate apparel and shoes to prevent loose clothes or decoration from being caught in themachine.

3) Allow a 7' x 7' space in front of the machine for use. If the product is used in a busy area, keep alert without being distracted.

2) Keep your head, hands, four limbs, fingers and hair away from moving parts to ensure personal safety.

7) Start exercise gradually and progressively.

5)Keep children or pets away while in use.

6) If you feel dizzy, chest distress, short of breath or any other abnormal symptoms, please stop using the product immediately and contact your doctor.

9) Do not use the machine right after a meal, feel fatigued or impaired, or when you feel physically abnormal.

11) Make reasonable judgments for weight selection to avoid over-fatigue, overuse or even injury.

8) If any abnormal event occurs to the machine, stop using it immediately and cut off the power source.

12) This product is not a medical piece of equipment, and therefore the displayed indexes and values may be incorrect and should only be used as reference.

After Use

1) Relaxation exercises are recommended after any training.
2) Place the arms and any equipment back into place.
3) Switch off the power source and remove the plugif the machine will not be used for a long

period of time.

4) If removing the plug, do not pull or insert the power plug with wet hands.
5) When pulling out the power plug, do not grasp the wire part to avoid any possible short circuit, electric shock, injury or fire.
6) In a case of power outage, remove the power plug immediately to avoid electric shock, accident or injury upon power supply resumption.

Specifications

Weight: 148 pounds

Bluetooth: 4.0

Wi-Fi：2.4GHz

Recommended temperature range: 50°F - 104°F (10°C - 40°C)

Input voltage: 120VAC

Input frequency: 60Hz

Input current: 12A

Input power: 1500w (maximum)

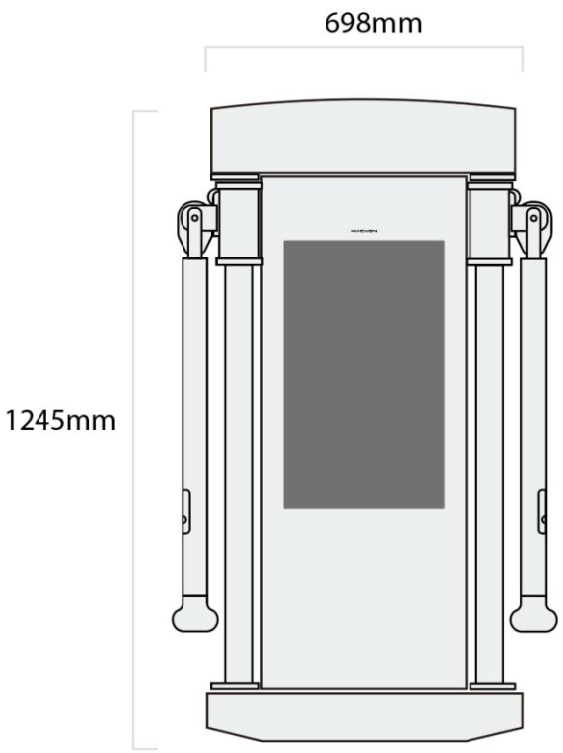

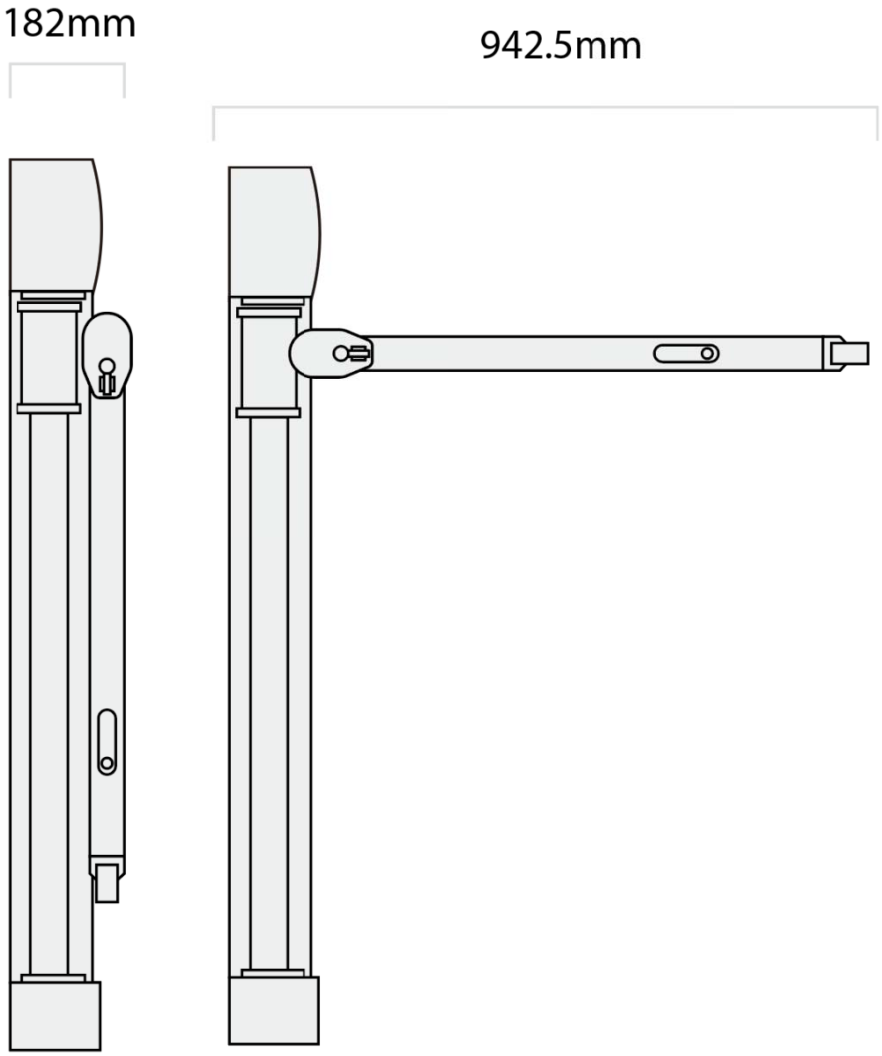
182mm
942.5mm

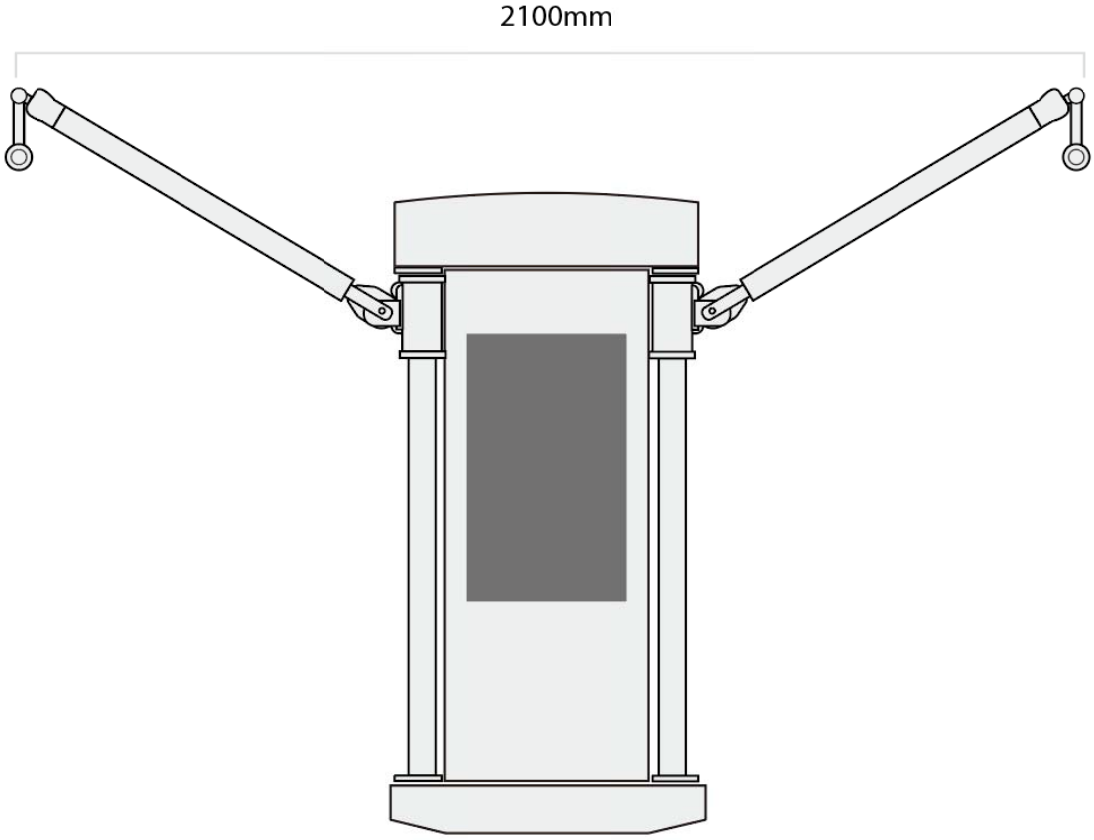
2100mm

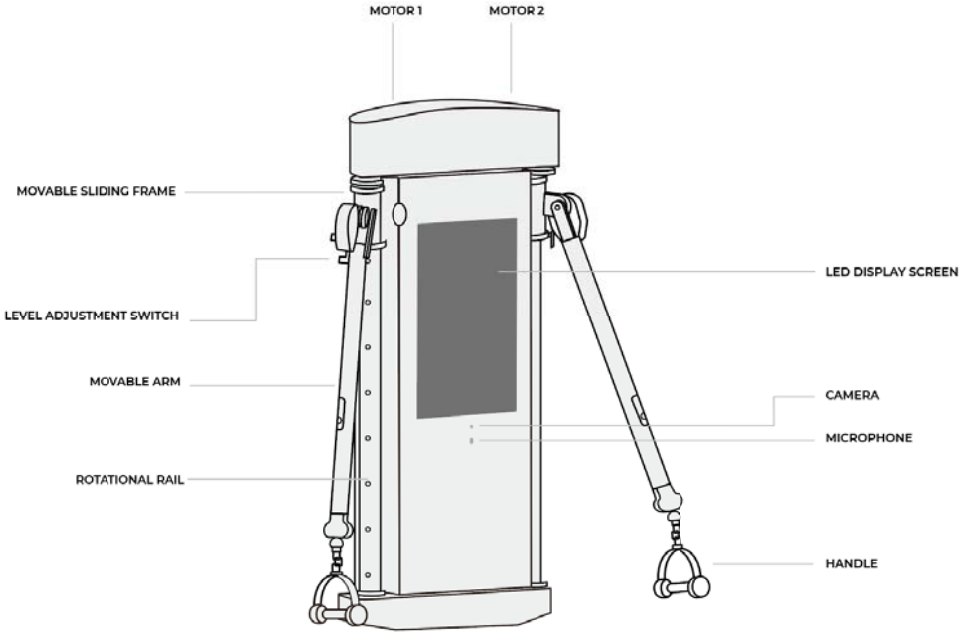
MOTOR 1
MOTOR 2
MOVABLE SLIDING FRAME
LEVEL ADJUSTMENT SWITCH
MOVABLE ARM
ROTATIONAL RAIL
LED DISPLAY SCREEN
CAMERA
MICROPHONE
HANDLE

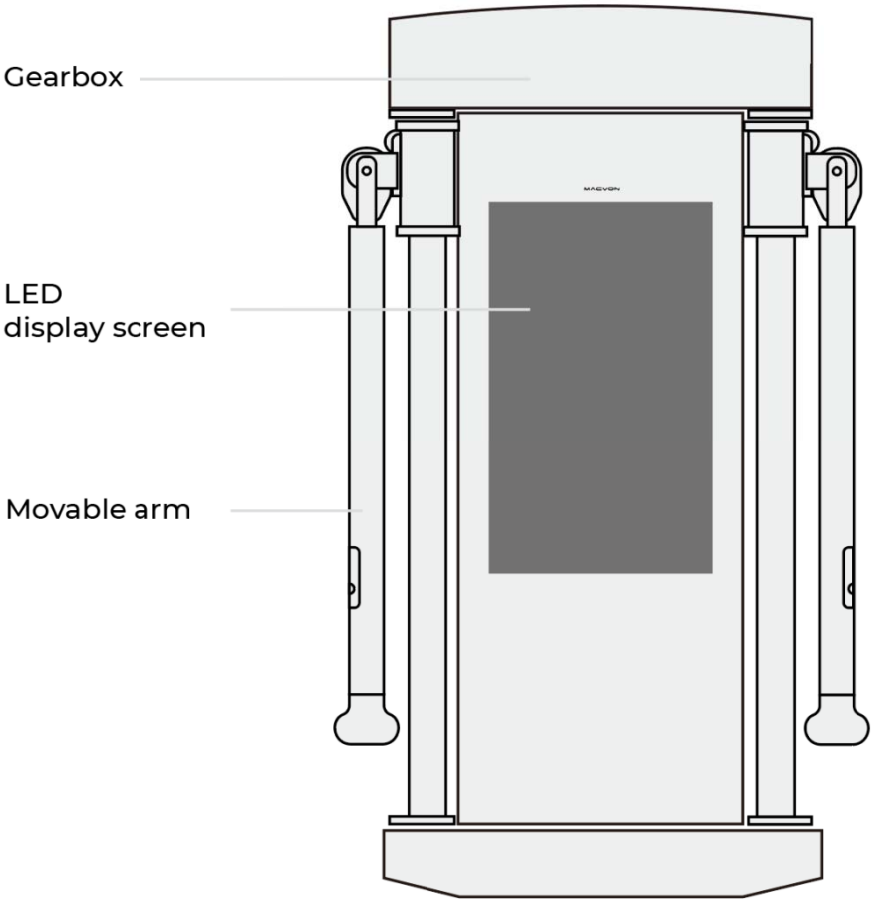
Gearbox
LED
display screen
Movable arm

Functions and Characteristics

Moving arms up and down

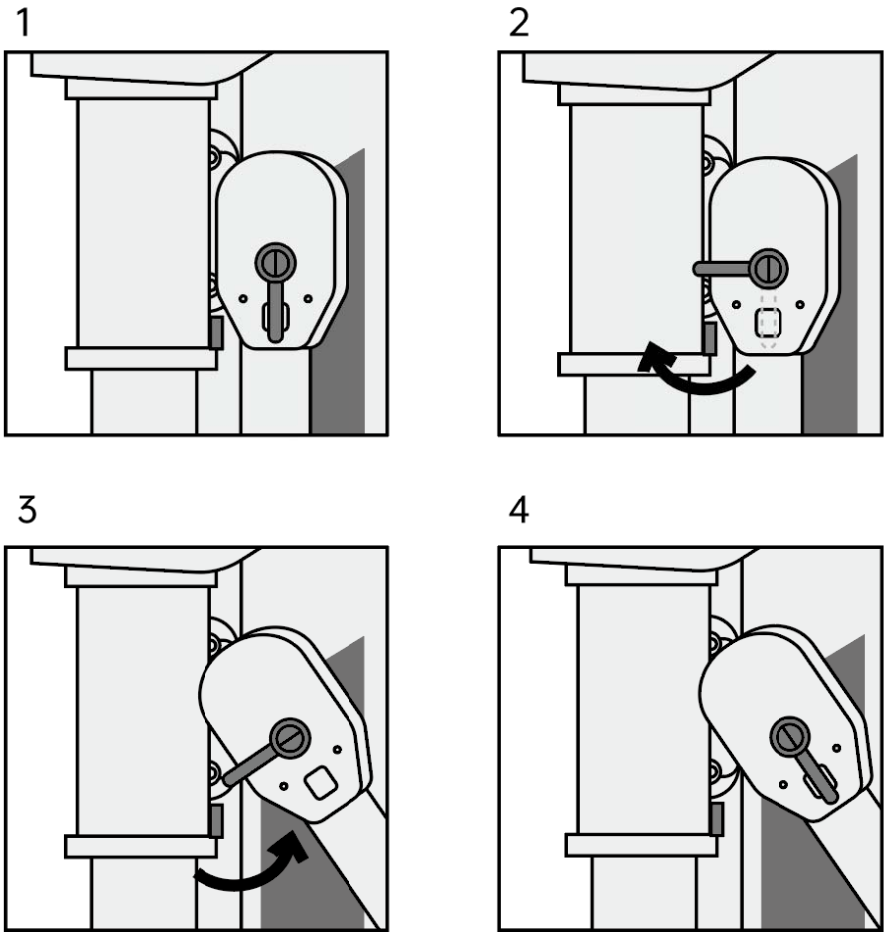

1) Hold the arm with one hand, and with the other hand rotate the knob 90 degrees to the unlocking position (the knob has two positions, that is, one is a default locking position and the other is 90-degree unlocking position.);

2) Move the arm up;

3) Rotate the knob back to the default locking position.

4) Press the knob

5) Continue pressing the knob while moving two arms to a desired angle position

Rotating arms left and right

1. **Long-press** the button on the arm until you hear a mechanical unlocking sound;

2. Rotate the arm left or right until you hear a mechanical locking sound after releasing the button.

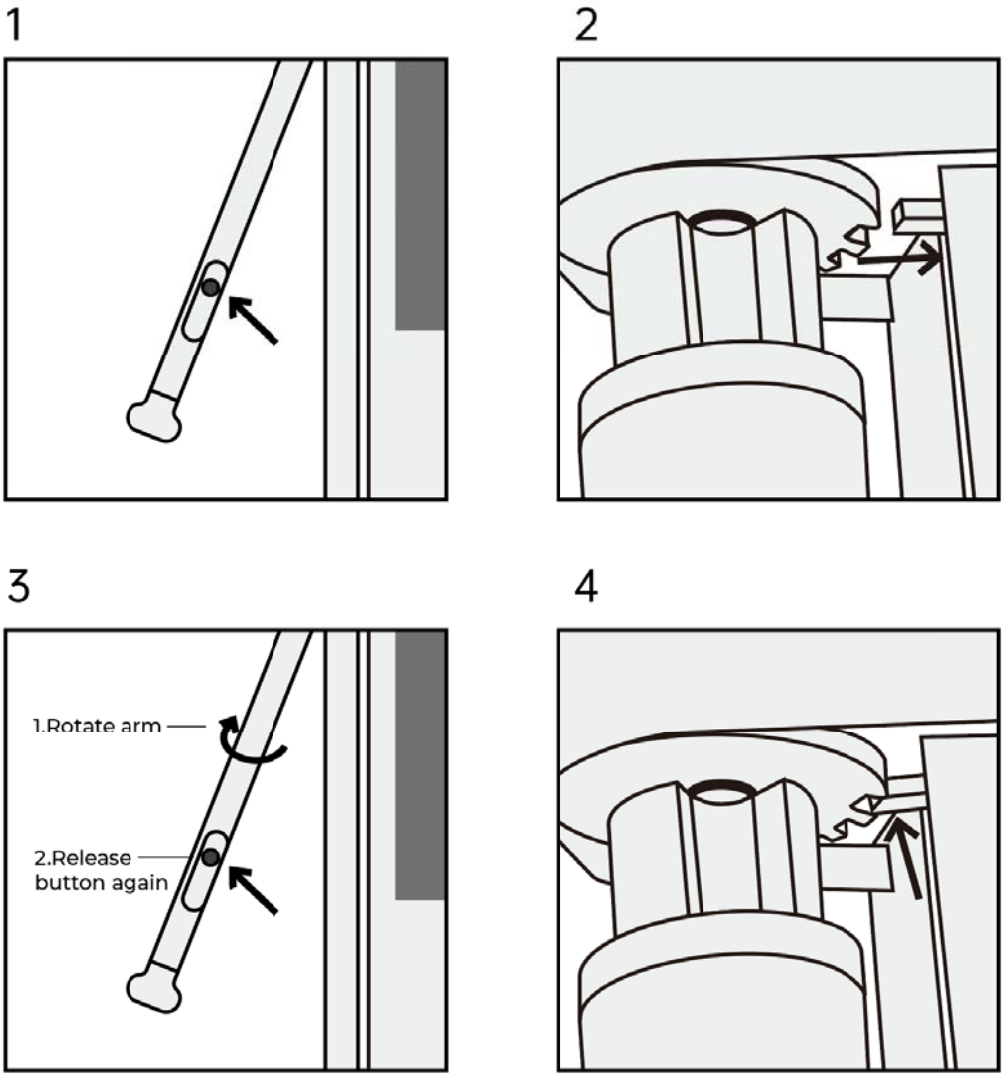

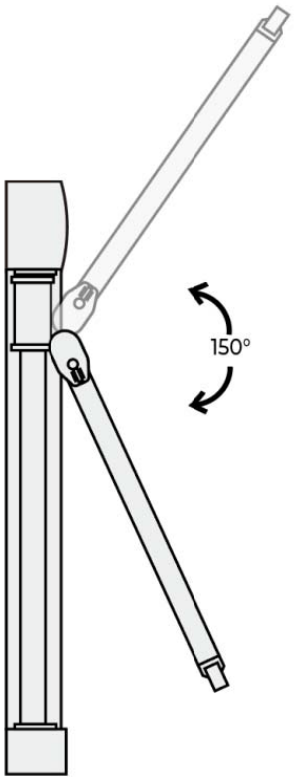

v

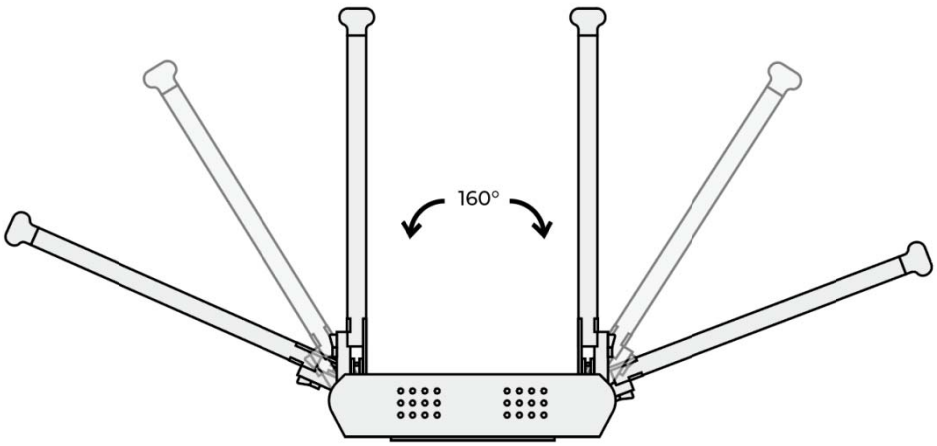

The maximum angle of the two arms rotating right and left is about 160 degrees.

The minimum angle of the two arms rotating right and left is a right angle to the screen mirror.

Wi-Fi Connection

The machine needs to connect with Wi-Fi to access the latest training videos, track training history and receive software updates.

In a standby mode, the device will keep its Wi-Ficonnection to receive updates.

Account Management

Before using the product, You will need to create an account. If you already have an account, please log in. If your device is shared, please remember to log out at the end of your training.

Personalized Experiences

Before starting your training, please set a training target. This will then provide you a personalized training program according to your selected data and target.

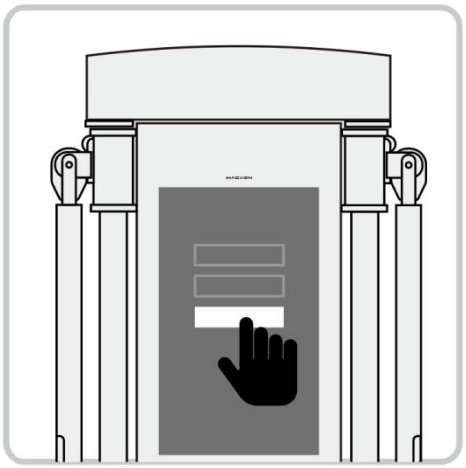

Get to Know the Product

Before use, please read through our manual or watch our our tutorial video to learn how to use it and best practices.

If these resources are not available, you can visit our website to obtain help or contact our team.

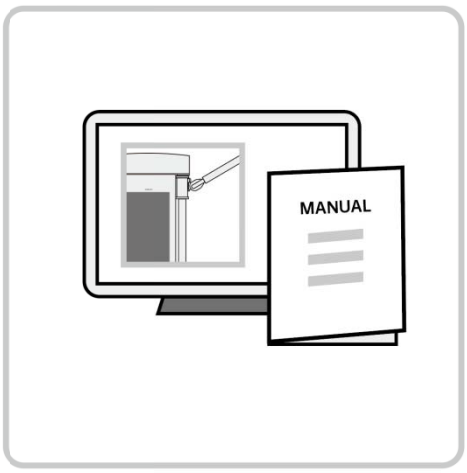

Get to Know The Trainers

You can get to know our professional training team through our official website or videos on the machine.

All the coaches have different styles but one objective – to find the best you!

Free Usage Mode

If you want to do exercise by yourself, please select the free use mode.

Adjust the weight, select one action and then start;

Turn the Weight On/Off

The handle accessories provided have acontroller to turn on or off the weight intelligently and also provided with a touch module to increase force by sliding your thumb toward the right, ordecrease force by sliding your thumb toward the left side. Double tap enables/disablesthe weight.

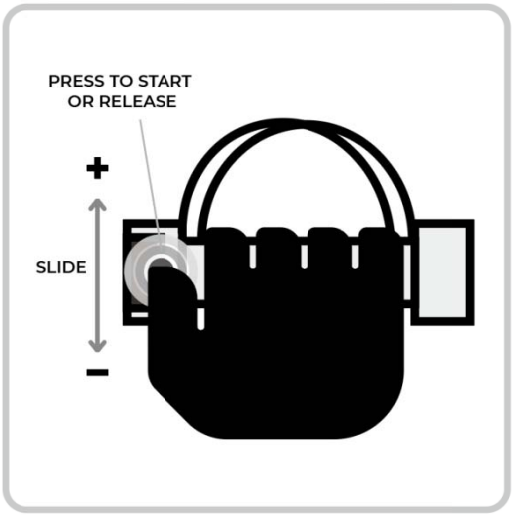

Voice Control

The product also comes with voice control. Saying “Stop” loudly will immediately release the weight.

Servicing and Maintenance

Warning: Please unplug the machine before cleaning or servicing the machine.

Cleaning: complete cleaning will extend the service life of the machine.

The machine only requires a small amount of maintenance and servicing work. As best practice, we recommend you to carry out a quick cleaning of the machine at the end of each use. Use a common cleaning cloth rather than an abrasive material. Do not splash water onto the electrical components or into the machine.

Before carrying out the cleaning or servicing work, please disconnect the power source of the machine. Do not empty water or other liquid onto the machine as it may damage or even break the machine. For more recommended cleaning solutions, please visit our website.

We recommend you to carry out regular inspection on the machine. If you find any damage, please contact our customer service.

Notice: any other maintenance operations must be performed by professionals.

Clean the arm and rods of the machine with soft cloth, or sponge or mild cleaningliquid;

Clean the machine after a few uses or as required;

Display maintenance

Wipe off fingerprints or stains on the display with a dry or damp cloth, or cleaning liquid for electronic products such asfor mobile phone computers.

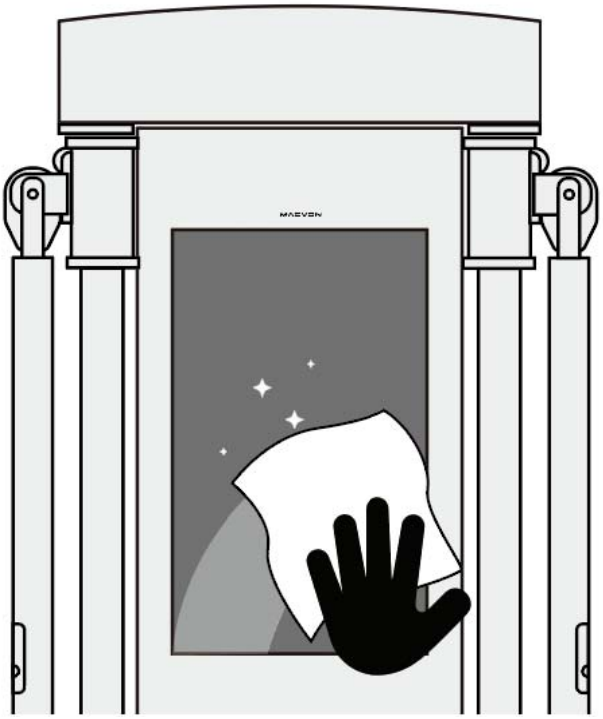

Accessory Maintenance

After use of the accessories, please clean each accessory similarly to that as the device. If an accessorywill not be used for long, please remove it from the machine.

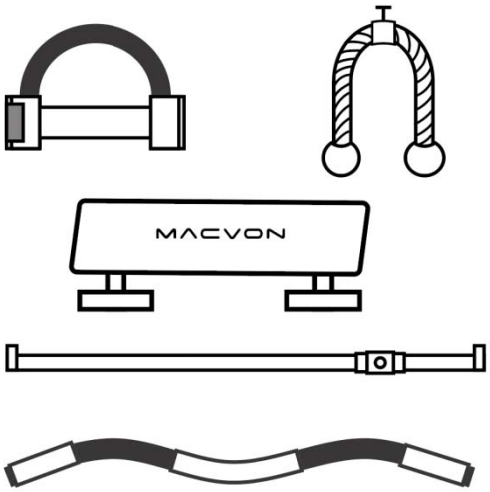

Software Maintenance

The machine can automatically receive updates to the software and firmware via Wi-Fi. To ensure the latest version of your software, please keep the machine connected to WIFI.

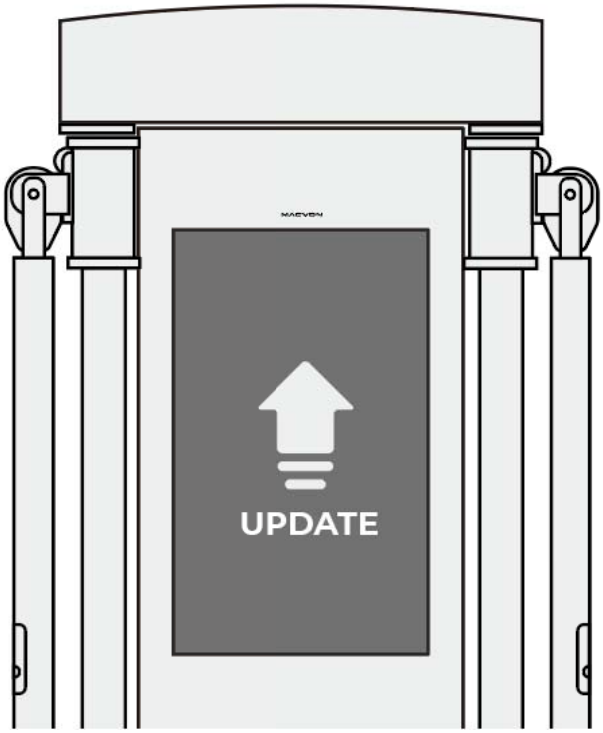

Warranty and support

To check the clauses and conditions of our warranty, please visit our official website. If necessary,

please visit our website or contact our customer service team who can help you with any problem or any warranty request.

FCCWarning

This device should be installed and operated with a minimum distance of 20cm between the antenna and all persons.

This device has been tested and found to comply with the limits for a Class B digital device, pursuant to Part 15 of the FCC Rules. These limits are designed to provide reasonable protection against harmful interference in a residential installation. This device generates, uses and can radiate radio frequency energy and, if not installed and used in accordance with the instructions, may cause harmful interference to radio communications.

However, there is no guarantee that interference will not occur in a particular installation. If this device does cause harmful interference to radio or television reception, which can be determined by turning the device off and on, the user is encouraged to try to correct the interference by one or more of the following measures:

--Reorient or relocate the receiving antenna.

--Increase the separation between the device and receiver.

--Connect the device into an outlet on a circuit different from that to which the receiver is connected.

--Consult the dealer or an experienced radio/TV technician for help

Changes or modifications not expressly approved by the party responsible for compliance could void the user's authority to operate the equipment