Installation manual

Reader Pro 2

FCC ID: 2AX80-RPRO2

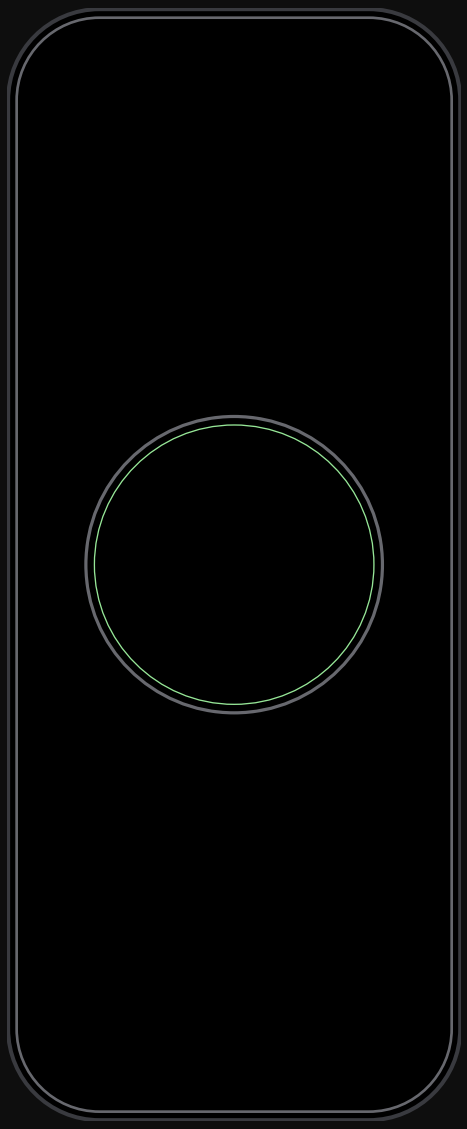

45 Main Street,
11201 Brooklyn
USA

sales@getkisi.com
getkisi.com

kisi

Installation manual

Reader Pro 2

FCC ID: 2AX80-RPRO2

List of equipment / What is in the box

Reader Pro 2 (1x)
Aluminium mounting frame (1x)
Backplate (1x)
Hex key (1x)
Security screws (1x) (+1 back up)
Wall mount anchors (2x)
Wall mount screws (2x)
Self tapping screws for metal frame (2x)
Waterproof kit (1x)

Tools needed

- A screwdriver/hand drill
- A #2 Phillips driver if mounting on mounting box
- 1 Backplate
- 7/8 inch (22.2mm) drill bits if mounting on aluminium profile
- 1/8 inch (3mm) drill bit for pilot holes

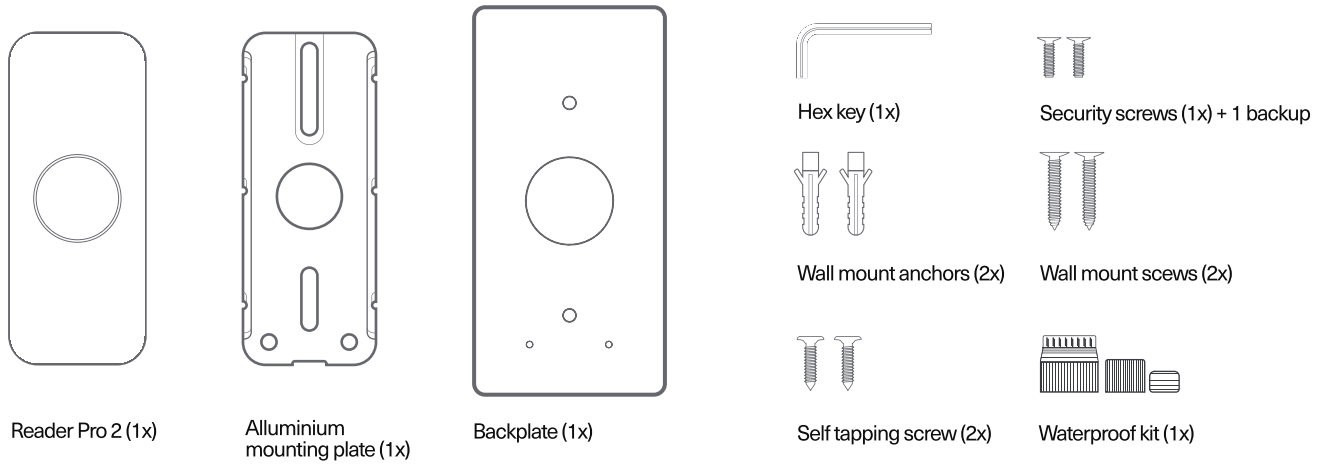

Mounting instructions

On LV1 Mounting bracket

1. Secure the Backplate and the Aluminium mounting frame to the LV1 mounting bracket by using the 2 wall mounted screws.
2. Connect the Reader Pro 2 to the cabling in place.
3. Insert the Reader Pro 2 inside the aluminum mounting frame and then slide up the Reader Pro.
4. Secure the Reader Pro 2 by installing the security screw (hex key provided).

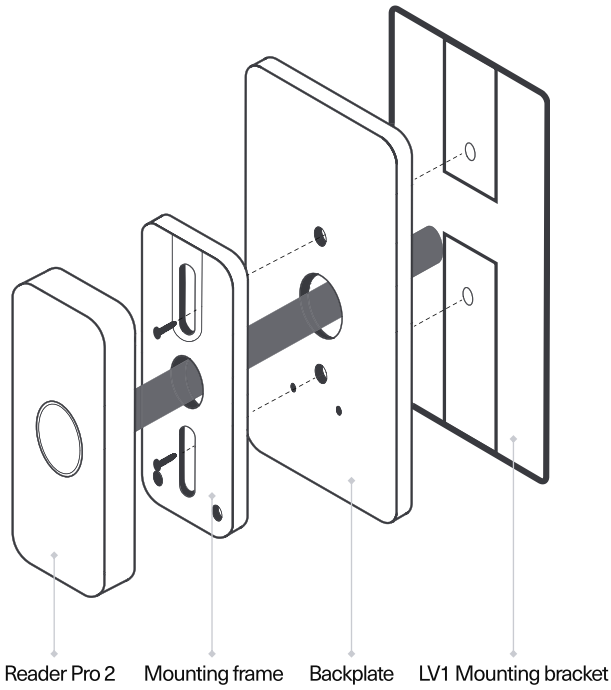

On metalic profile

1. Drill a hole of at least 7/8 inch (22.2mm) of diameter in the metallic profile.
2. Secure the Aluminium mounting frame to the metallic profile using the 2 self tapping screws.
3. Connect the Reader Pro 2 to the cabling in place.
4. Insert the Reader Pro 2 inside the aluminum mounting frame and then slide the Reader Pro 2 in the upper direction.
5. Secure the Reader Pro 2 by installing the security screw (hex key provided).

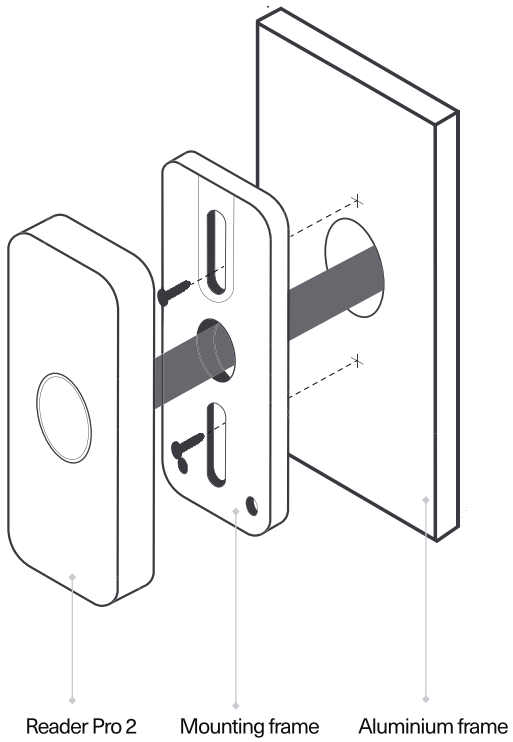

Federal Communication Commission Interference Statement

FCC ID: 2AX80-RPRO2

Contains FCC ID:
VPYLB1GC, QOQBGM113

This equipment has been tested and found to comply with the limits for a Class B digital device, pursuant to Part 15 of the FCC rules. These limits are designed to provide reasonable protection against harmful interference in a residential installation.

This equipment generates, uses and can radiate radio frequency energy and, if not installed and used in accordance with the instructions, may cause harmful interference to radio communications. However, there is no guarantee that interference will not occur in a particular installation. If this equipment does cause harmful interference to radio or television reception, which can be determined by turning the equipment off and on, the user is encouraged to try to correct the interference by one or more of the following measures:

a) Reorient or relocate the receiving antenna.
b) Increase the separation between the equipment and receiver.
c) Connect the equipment to an outlet on a circuit different from that to which the receiver is connected.
d) Consult the dealer or an experienced radio/TV technician.

FCC Warning: Modifications not expressly approved by the manufacturer could void the user's authority to operate the equipment under FCC Rules.

This device complies with Part 15 of the FCC Rules. Operation is subject to the following two conditions: (1) this device may not cause interference, and (2) this device must accept any interference, including interference that may cause undesired operation of the device.

This device complies with FCC radiation exposure limits set forth for an uncontrolled environment and meets the FCC radio frequency (RF) Exposure Guidelines. This transmitter must not be co-located or operating in conjunction with any other antenna or transmitter.

Radiation Exposure Statement: The product complies with the FCC portable RF exposure limit set forth for an uncontrolled environment and is safe for intended operation as described in this manual. Further RF exposure reduction can be achieved if the product is kept as far as possible from the user body or set the device to lower output power if such function is available

Wireless notice: This device complies with FCC radiation exposure limits set forth for an uncontrolled environment and meets the FCC radio frequency (RF) Exposure Guidelines. This transmitter must not be co-located or operating in conjunction with any other antenna or transmitter.

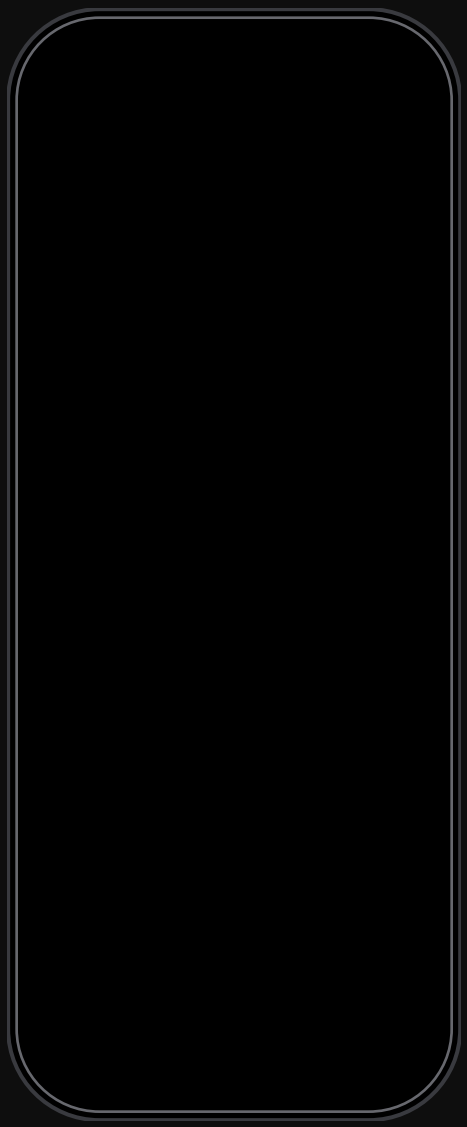

45 Main Street,
11201 Brooklyn
USA

sales@getkisi.com
getkisi.com

kisi