本页不算入印刷

文件编号：
P3-YM-A058-01

尺寸：单页尺寸140×210mm
装订：骑马钉
材质：太空梭哑粉105g

版本号：
2024.01.10
V1.0 首次创建
2024.03.07
V1.1 充电座输入修改为“20V，0.6A”
2024.03.11
V1.2 产品名称修改为R1 Edge

Lydsto Sweeping and Mopping Robot R1D Edge
Instruction manual

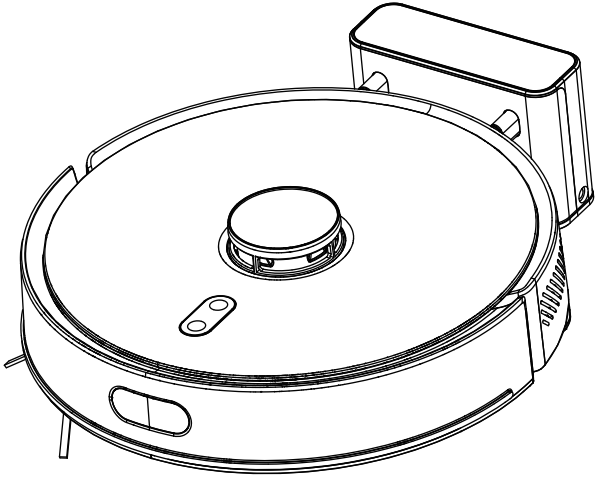

Tips

Please read through this manual before using the product, and keep it properly.

Table of contents

Product introduction 1
Install 5
Direction for use 8
Connect APP 10
Daily maintenance 11
Basic specification 16
FAQ 17
Trouble removal 18
Safety information 19

Product introduction

Host

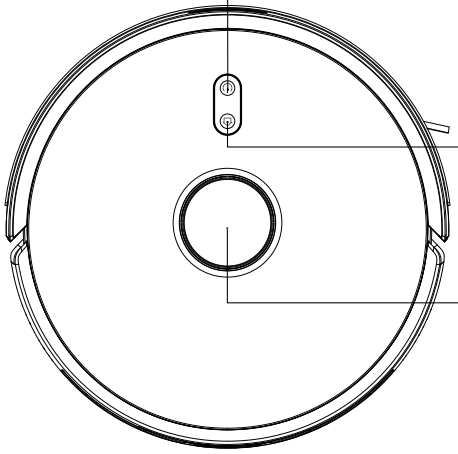

On off button / Cleaning / Pause

- Short press to start cleaning / Pause
- Long press to turn on / off

Recharge / Pause

- Short press to recharge / Pause

Laser head impact sensor
Laser ranging sensor

Indicator light

- White: Normal working/Charging
- Red: Abnormal state or low battery

Product introduction

Sensor and structure

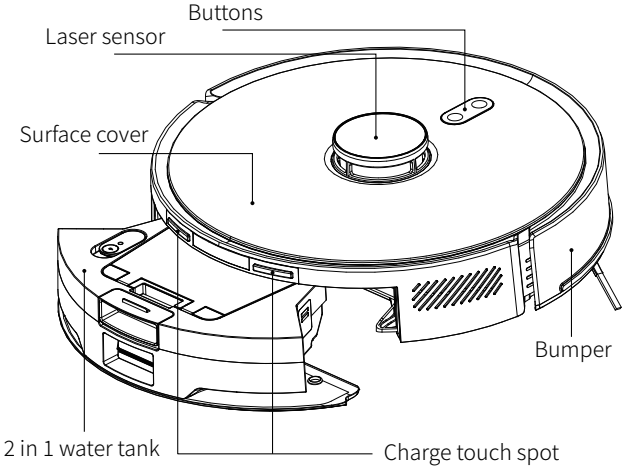

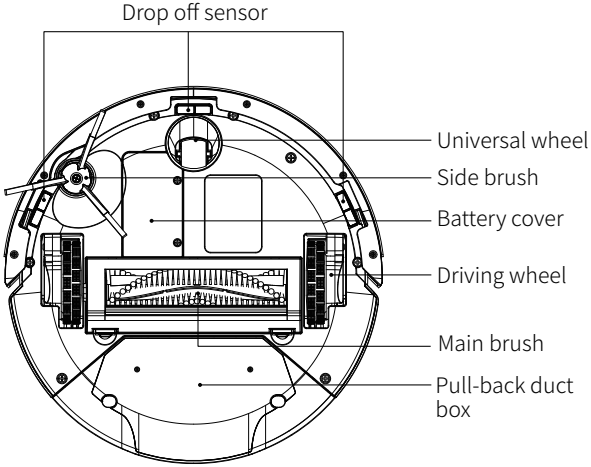

Product introduction

Charging base

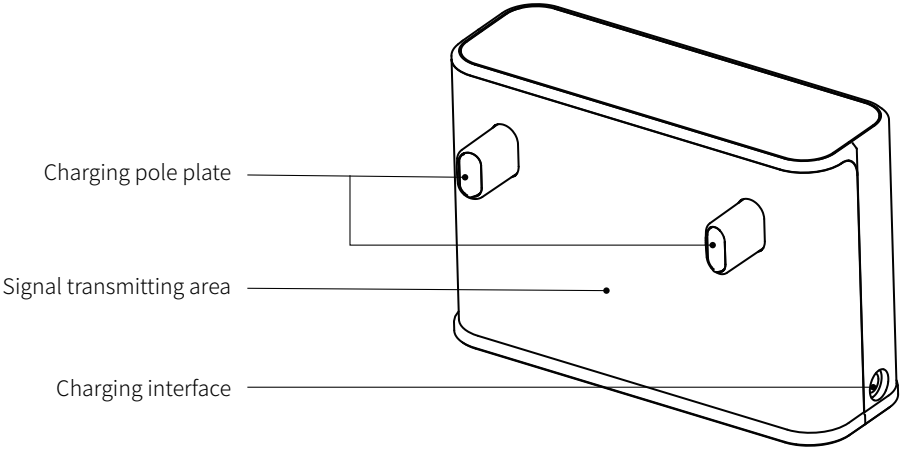

Product introduction

Accessories list

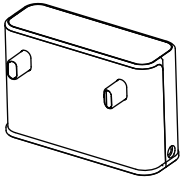

Charging base×1

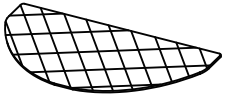

Mop×1

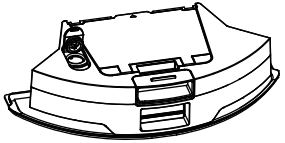

Water dust
integrated box×1

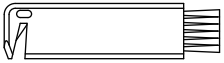

Cleaning brush×1

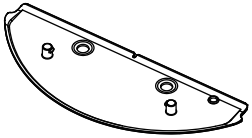

Mop cloth support×1

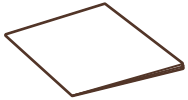

Instructions×1

Install

1.Before starting the machine, please clean the scattered wires, hard objects, sharp objects (such as nails and glass) on the ground and remove the toppable, fragile, valuable and potentially dangerous objects. Avoid personal injury or property damage caused by machine entanglement, jamming, dragging or collision.
2.If the product is used in the hanging environment, please set the guardrail to prevent the equipment from accidentally falling or pushing items to fall, causing personal or property damage.

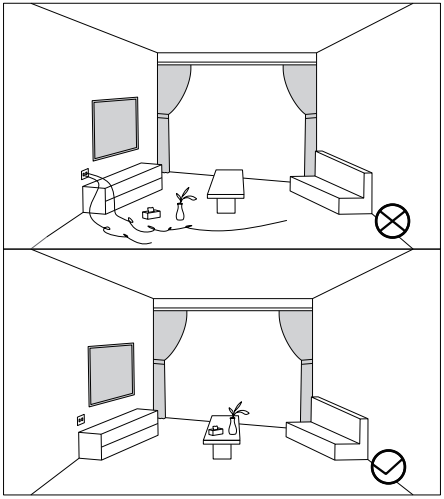

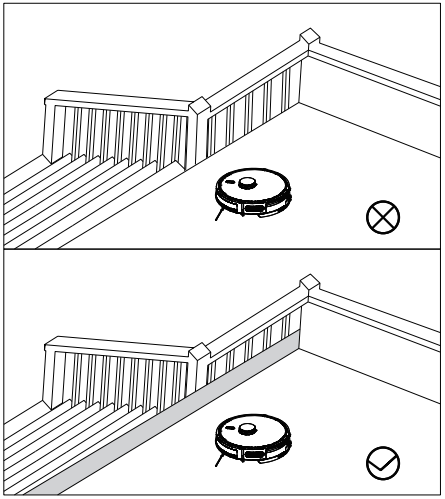

Reminder：
1.During the first cleaning process, it is recommended to follow the host throughout the whole process to help deal with some possible minor problems. After handling, the host can smoothly clean itself in the future cleaning.
2.If some areas do not need to be cleaned or may jam the host, you can set a restricted area in the mobile APP to prevent the host from entering the above areas.
3.Do not let the robot absorb hard or sharp objects (such as decoration waste, glass, nails, etc.), otherwise it may scratch the robot and the ground.

Install

1.Connect the power cable and tidy up the excess wire.

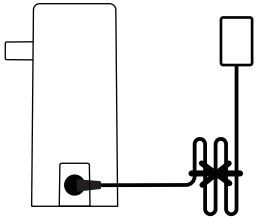

3.Place the charging base against the wall on the flat ground and connect the power supply.

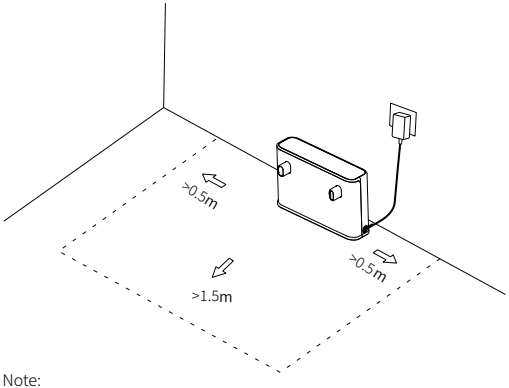

Note:
Ensure that more than 0.5 m is left on both sides of the charging base.
If the power cable of more than 1.5 m in front is hanging to the ground, it may be dragged by the host. As a result, the charging base will be pow eredoff. The charge indicator light is always on when powered on.

2.Please do not move the charging dock casually, avoid direct sunlight on the charging dock

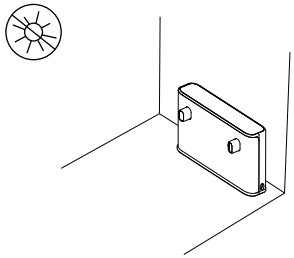

Note:
Sunlight exposure can interfere with the recharge signal and may prevent the console from returning to the charging cradle.

Install

5.Start up and charging

Long press the (⏻) button to start up, wait for the indicator light to be steady on, and charge the host with the dust collector. The language prompt "Start charging" indicates successful charging.

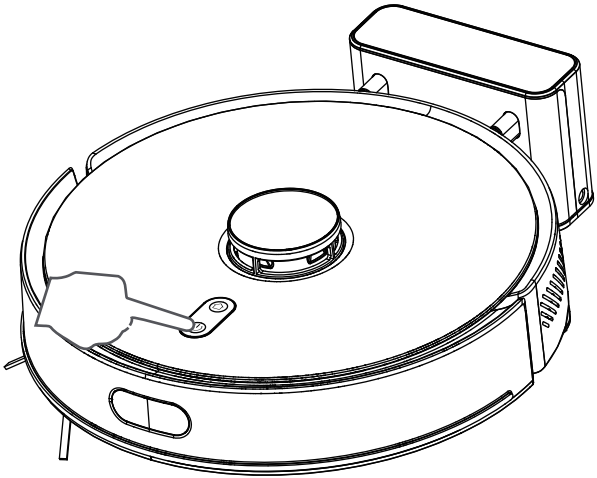

Note: The device cannot be started due to insufficient power supply. Please place the host on the dust collector and the device will start up automatically.

Direction for use

Start up/off

Long press (⏻) buttons for 3 seconds, indicator lights on, start up successful.
When machine stand by, long press (⏻) buttons for 3 seconds, indicator lights off, machine shutdown.

Note: The main host cannot be turned off while charging.

Cleaning / Pause

After start up, short press (⏻) buttons on the main host, or control begin cleaning from mobile APP.

Note:

- Vacuum robot should not be used to clean liquid.
- If the battery is lower than 15%, the cleaning task cannot be performed. Please charge the battery first and then continue the cleaning.
- When the battery is lower than 15% during the cleaning process, the device will automatically returnto the dust collector bin for charging.
- Please tidy up all kinds of cables on the ground (including the power cable of dust collection treasure) before cleaning to avoid electrical power failure, damage to articles or cables caused by dragging during cleaning.

Charging

Automatic mode: After cleaning, the master will automatically return to the dust collector to charge.
Manual mode: In the paused state, press the (⌂) buttons to start the recharge or the phone APP to start the recharge

Note: If the host does not find the dust collector bin, it will automatically return to thestarting position.
Please manually put the host back on the dust collector bin to charge.

Direction for use

Automatic cleaning

After starting up, the machine will first plan the cleaning path in the way of edge and then in the way of arch filling, orderly and efficient cleaning of the whole house. After cleaning, the device will automatically return to the dust collector bin to charge (the default cleaning mode of the machine).

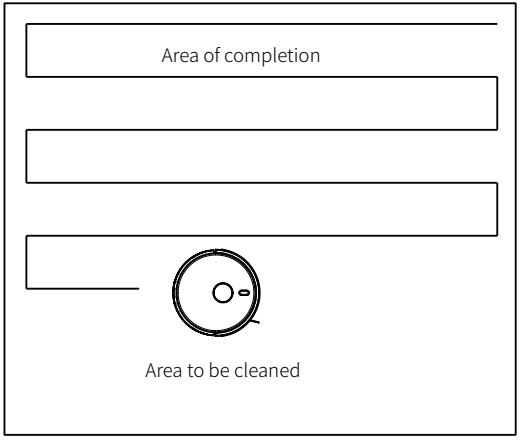

Suction adjustment

You can choose Quiet, Standard, Strong and MAX by using mobile APP.

Water level adjustment

You can choose High gear, Medium gear and Low gear (The default mode is Medium gear).

Appointment cleaning

The mobile phone APP can be used to set the scheduled cleaning time.
The host will automatically start cleaning at the specified time.
The mobile phone APP can be used to set the scheduled cleaning time.
The host will automatically start cleaning at the specified time.

Connect APP

Connect to Lydsto APP

Lydsto APP can be downloaded from Apple APP market or Google APP market.

Or Scan the following QR code,Download and install Lydsto APP.

Reset Wi Fi

Press and hold the buttons ⏻ and ⌂ for 3 seconds, then you will hear a voice prompt "Wi Fi has been reset", the power indicator will blink in white, and the sweeping and mopping robot will enter the state of waiting connection.

Opening Bluetooth on the phone can assist with network configuration through Bluetooth

Tips: only 2.4GHz frequency band Wi Fi network is supported.

Connect to MIJIA APP

The product has been connected to MIJIA. It can be controlled by MIJIA APP and interconnected with other products.

Scan the QR code, download and install MIJIA APP. Users with MIJIA APP already installed will directly enter device connection page. Or search "MIJIA" in APP store, download and install MIJIA APP. Open the home page of MIJIA APP, click "+" at the top right, and add the device according to the method recommended by the APP.

Note: The actual operation may be slightly different from the description above due to the upgrade and update of MIJIA APP. Please follow the current guide in MIJIA APP.

Reset Wi Fi

Press ⏻ button and ⌂ button for 3 seconds at the same time, and hear the sound prompt “Wi-Fi has been reset”. The power indicator flash in white. At this time, hold them on for 2 seconds. Hear the sound prompt “Enter MIJIA Networking Mode”, then enter the MIJIA Networking Mode. After that, use MIJIA APP for networking operations.

Daily maintenance

Main brush (recommended cleaning once a week)

1. Turn the machine over and press the buckle on the main brush cover to take out the cover.

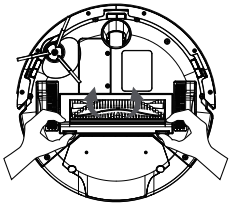

2. Remove the main brush.

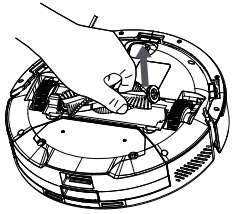

3. Use a matching cleaning brush to remove dust from the main brush and the main brush cavity, and then remove entanglements from the main brush.

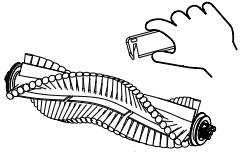

Side brush (recommended cleaning once a week)

1. Flip the machine over and use a screwdriver to remove the screws and remove the edge brush.
2. Remove tangled hair and dirt and reinstall it.

Note: It is recommended to replace the side brush every 3 months to ensure the cleaning effect.

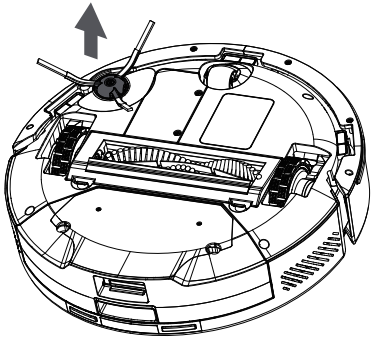

Daily maintenance

Dust box and filter screen

(recommended to be cleaned after each cleaning)

1. Press the button at the back of the machine and take out the dust box.

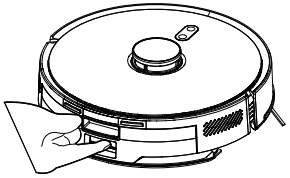

2. Press and hold the dust box switch to open the dust box and dump the garbage.

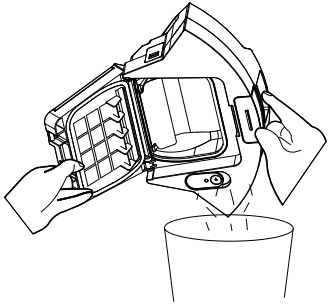

Clean the dust box

(recommended cleaning once a week)

1. After a long time of use, remove the filter mesh, HEPA filter.
2. Remove the primary effect filter and put the dust box under the faucet to wash (HEPA filter can not be washed).
3. After cleaning, dry the water, air filter and dust box, until thoroughly dry can be used.

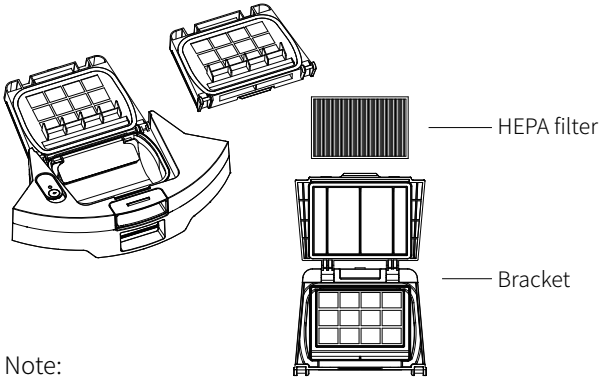

Note:

- Please wash, do not add any detergent.
- Do not use brush, fingers clean strainer.
- Mesh to dry for at least 24 hours, thoroughly dry.
- It is recommended to replace one set of filters every 3 months.

Daily maintenance

Use of water tank

Do not use the mop function on the carpet. After the mop is completed, please empty the water tank and remove the rag in time.

Add water

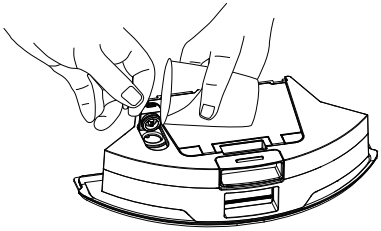

Installing the water tank Assembly

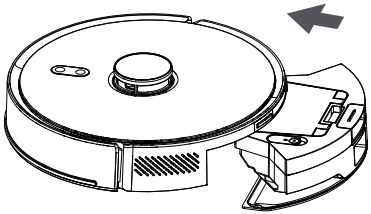

Installing mop

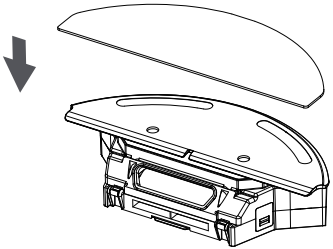

Start mopping

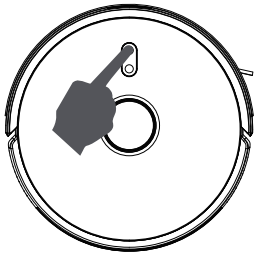

Daily maintenance

Clean the laser detection sensor (once a month is recommended)

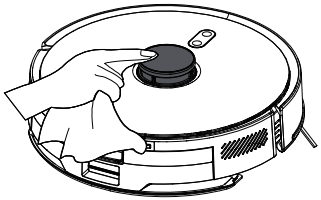

Clean cliff sensor (monthly cleaning is recommended)

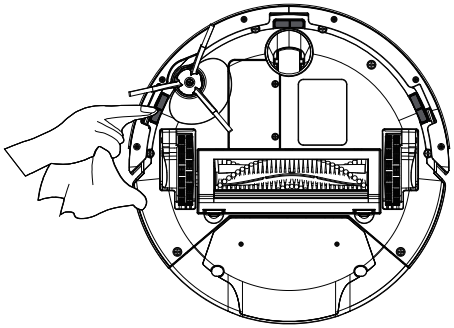

Clean the charging contact(once a month is recommended)

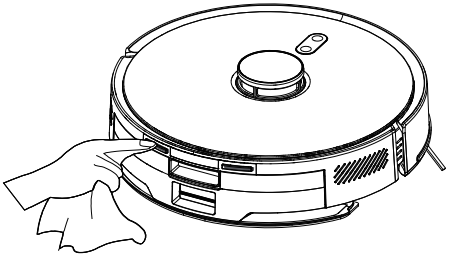

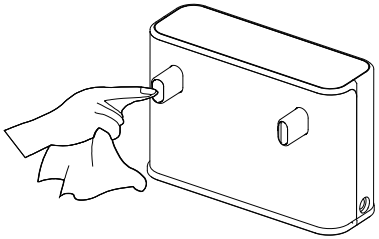

Daily maintenance

Clean the signal transmitting area of the charging base (once a month is recommended).

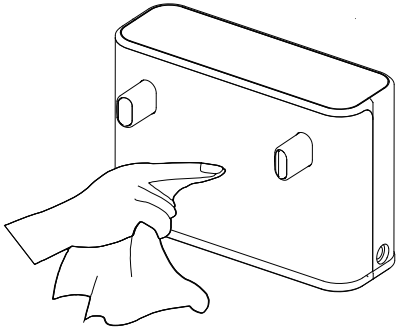

Battery

- The host has a built-in high-performance rechargeable lithium battery pack. In order to maintain the battery performance, please keep the host charged during daily use.
- If you do not use it for a long time, please turn it off and store it. Charge it at least once every three months to avoid excessive damage to the battery.

Basic specification

Host

	Specification
Product name	Robot Vacuum Cleaner
Product model	YM-R6D-W03、YM-R6D-B03
Shape size	320×320×100mm
Battery	4S1P 2600mAh lithium battery
Rated voltage	14.4V ⎓
Rated power	45W
Charging time	5H
Dust box capacity	290mL
Water tank capacity	300mL

Charging Station

	Specification
Product name	Charging Station
Shape size	149.5×52×100mm
Rated input	20V ⎓ 0.6A
Rated output	20V ⎓ 0.6A

FAQ

Type of Problem	The Solution
Machine not running/ unable to start	• If the battery level is low, place the device on a dust bin, align it with the charging electrode, and the device will automatically turn on. • If the ambient temperature is below 0 ° C, the device will not function properly. Please use it in an environment between 0 ° C and 40 ° C.
Unable to charge	• Please check if the power cord plug of the device is properly connected and confirm that the power supply to the socket is normal. • Poor contact, please clean the dirt on the charging electrode.
Recharge failed	The device is too far away from the dust bin, please place the host near the dust bin.
Abnormal behavior	Shut down and restart.
Abnormal noise during cleaning/dust collection	The main brush, side brush, or side wheel may have foreign objects entangled. Please stop the machine after cleaning.
Reduced cleaning ability or dust falling off	• The dust box is full, please clean it. • Filter clogged, please clean or replace. • The main brush is entangled by foreign objects, please clean the main brush.
Unable to connect to WIFI	• The WIFI signal is not good. Please ensure that the device is in a good WIFI (2.4G frequency band, not supporting 5G) signal coverage range in this area. • Please reset WIFI and download the latest mobile application to try reconnecting. • Check if you have entered the correct password.
The preset cleaning does not take effect	• If the battery is low, the scheduled cleaning will only be initiated when the remaining battery is ⩾ 15%. • When the machine is started on the dust collector, the remaining power should be ⩾ 30%.

Trouble removal

Prompt tone	The Solution
Please reinstall the 2-in-1 tank and start again	Cleaning will be triggered when the water tank is removed. Please reinstall the tank.
Please start the device on the level ground	Pick up the device, or the device is suspended in the air, please move the device to a flat ground before starting.
Please restart away from the restricted area	Please move the machine to a non-restricted area before starting up.
Please put the machine flat on the ground before starting	Tilt the machine, move the machine to a level ground before starting.
The device is trapped	Check for entanglement or obstacles, and promptly clean the ground to affect the equipment work items.
If the location fails, re-create the diagram	If map data is lost, plan the path again.
The machine is trapped	Please move the main engine to open ground and restart.
Please check the main wheel	Main wheel is stuck or entangled. Please check the main wheel and clean the foreign matter.
Please check the main brush	Main brush stuck or wrapped, please check the main brush and clean foreign matter.
Please check the edge brush	If the edge brush is stuck or wrapped, please check the edge brush and clean the foreign matter.
Off the ground, please return to the ground to start	Pick up the device, or the device is suspended in the air, please move the device to a flat ground before starting.
Please wipe the front anti-collision sensor	If the sensor on the front wall is abnormal, please clean, wipe and maintain it.
Please wipe the sensor along the right wall	If the sensor along the wall is abnormal, please clean, wipe and maintain it.
Please check the crash barrier	If the collision sensor is stuck, please clean and maintain it.

Safety information

Restrictions on use

- Plastic bags are dangerous! Keep plastic bags out of the reach of infants and children to avoid suffocation.
- This product is designed only for cleaning the floor in the home environment. Do not use it outdoors (such as open balcony), in places other than the floor (such as sofa), or in commercial or industrial environment.
- Do not use the product in hanging places (such as duplex floor, open balcony, top of home) without any protective rail.
- Do not use the product in the environment above 40 °C, below 0 °C or with any liquid and viscous substances on the ground
- Before use, please hang up the ground cable at home to avoid dragging the cable when the machine is operating.
- Put away the fragile articles and sundries (such as flower bottles and plastic bags) on the ground to prevent the machine from being blocked or hit during operation, causing damage to valuables.
- Do not let those who are physically, perceptually and intellectually deficient or lacking of experience and common sense (including children) use the product without monitoring or guidance.
- Do not let children use the product as a toy.
- Do not put the main brush cleaning tool in a place accessible to children.
- Keep the hair, fingers and other parts of men or pets away from the suction inlet of the machine when the machine is operating.
- Do not use the product to clean any burning objects (such as cigarette ends that are not extinguished).
- Do not absorb hard or sharp objects (such as decoration wastes, glass and nails) with the machine.
- Do not handle the machine with the protective cover of the laser distance measuring sensor, the upper cover of the machine and the collision buffer as the lifting hand.
- To clean and maintain the machine and the charging base, you must turn off the machine, pull out the plug from thesocket and disconnect the power supply first.
- Do not immerse the machine and the charging base in water for cleaning or flush them with water.
- Do not wipe any part of the product with a damp cloth or any liquid.
- Do not use the floor mopping module on the carpet.
- Do not use it under direct sunlight.
- Use the product according to the instructions. Any loss and injury caused by improper use shall be borne by the user.

Safety information

Battery and charging

- Even if the product has been seriously damaged, it is strictly forbidden to burn the product, because the product battery may cause explosion.
- Do not use the batteries, chargers and charging base of any third party.
- Do not disassemble, repair or refit the battery and charging base without permission.
- Do not place the charging base close to heat sources (such as radiator).
- Do not wipe or clean the dome of the charging base with a damp cloth or wet hands.
- Do not discard used batteries at will. Before discarding the sweeping and mopping robot, the power supply must be disconnected and the batteries should be taken out of the sweeping and mopping robot for environmental protection.
- In order to avoid danger, any damaged power cord must be replaced by professionals from the manufacturer, its maintenance department or similar departments.
- If you need to transport the product, make sure that the machine is turned off and it is recommended to use the original package.
- Do not pour water into the device or immerse it in water.
- If it will be not used for a long time, fully charge the machine, turn it off and put in a cool and dry place. Charge the machineat least once every three months to avoid battery damage due to over discharge.

Warn

- This appliance can be used by children aged from 8 years and above and persons with reduced physical,sensory or mental capabilities or lack of experience and knowledge if they have been given supervision or instruction concerning use of the appliance in a safe way and understand the hazards involved.
- Children shall not play with the appliance.
- Cleaning and user maintenance shall not be made by children without supervision.
- This appliance contains batteries that are only replaceable by skilled persons.

NOTE

This equipment has been tested and found to comply with the limits for a Class B digital device, pursuant to part 15 of the FCC Rules. These limits are designed to provide reasonable protection against harmful interference in a residential installation. This equipment generates, uses and can radiate radio frequency energy and, if not installed and used in accordance with the instructions, may cause harmful interference to radio communications. However, there is no guarantee that interference will not occur in a particular installation. If this equipment does cause harmful interference to radio or television reception, which can be determined by tuming the equipment off and on, the user is encouraged to try to correct the interference by one or more of the following measures:

- Reorient or relocate the receiving antenna.
- Increase the separation between the equipment and receiver.
- Connect the equipment into an outlet on a circuit different from that to which the receiver is connected.
- Consult the dealer or an experienced radio/ TV technician for help.

Warning: Changes or modifications to this unit not expressly approved by the part responsible for compliance could void the user's authority to operate the equipment.

FCC Radiation Exposure Statement

The device has been evaluated to meet general RF exposure requirement. The device can be used in fixed/mobile（min20cm）exposure condition without restriction.

Any changes or modifications not expressly approved by the party responsible for compliance could void the user ’ s authority to operate the equipment.

This device complies with Part 15 of the FCC Rules. Operation is subject to the following two conditions:

(1) this device may not cause harmful interference, and

(2) this device must accept any interference received, including interference that may cause undesired operation.

Manufacturer: Guangdong Yimu Technology Co., Ltd.

Website: www.lydsto.com

Address: Room 703,Building 4,No.636,Changdong Road,Changping Town,Dongguan,Guangdong,China