USER MANUAL

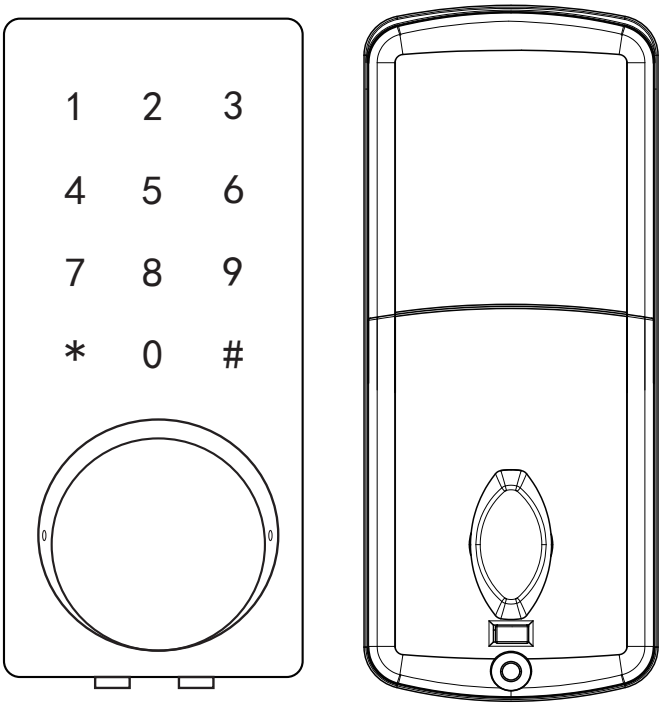

Note：

1. Before using this lock, please pair it to the mobile phone App .
2. This lock is equipped with mechanical keys for manual unlocking. Remove mechanical keys from the package and keep them in a safe place and always have access to them.
3. To power on the lock, four alkaline AA batteries(not included) are required. Non-alkaline and rechargeable batteries ARE NOT RECOMMENDED.
4. This lock is not designed to be exposed to direct sunlight or rain. It is not waterproof IP rated.
5. The operation of setting lock has a stand-by time limit of 20 seconds; Without any activity, lock will shut after 20 seconds.
6. Keep your fingers clean when using this lock.

Please read this manual before operating your Smart Lock,and keep it for further reference.

Door Preparation

1. Check door thickness and Door Frame.
   - Door frame≧110mm
   - Door thickness: 38-48mm

2. Check door open direction.

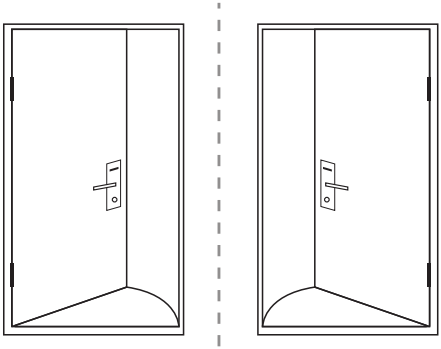

Left open　　Right open

Door drill hole map

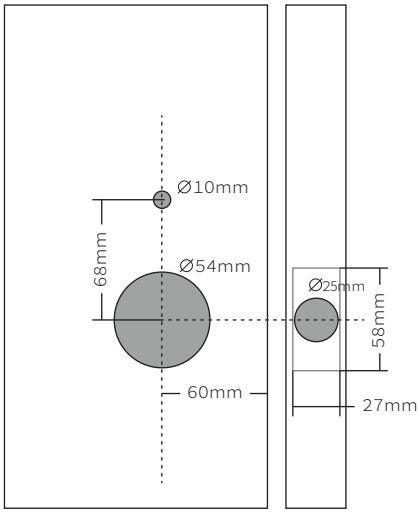

Packing List

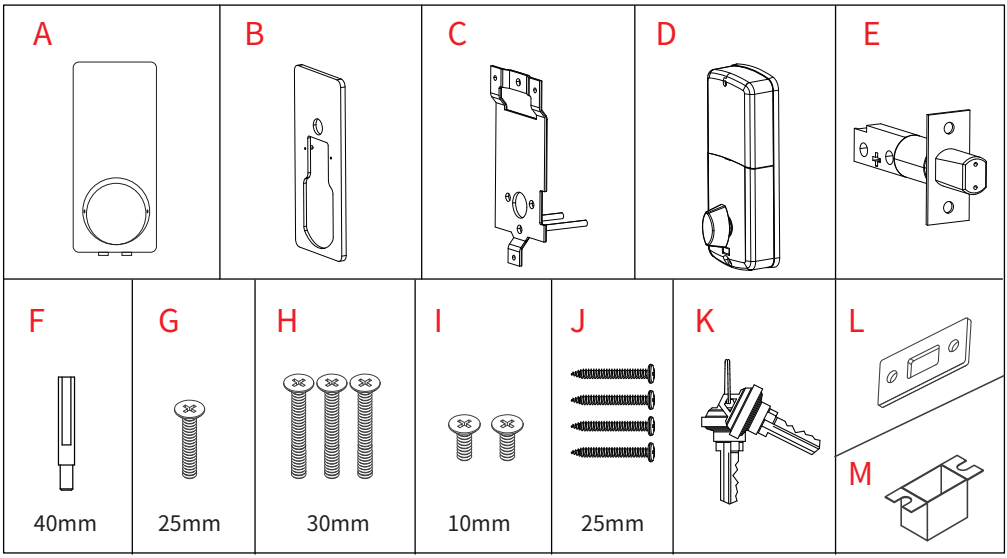

Installation Diagram

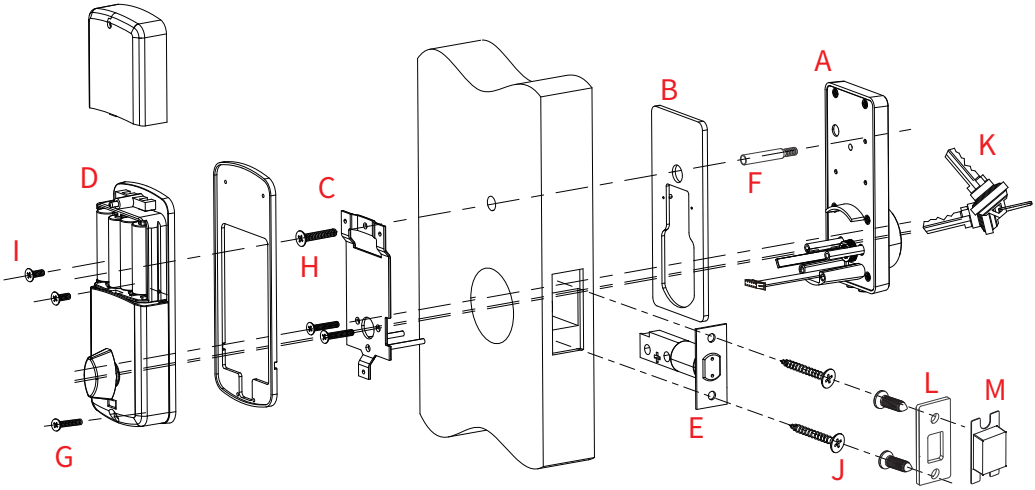

A) Outdoor lock body * 1
B) Silicon gasket * 1
C) Mounting plate * 1
D) Indoor lock body * 1
E) Deadbolt * 1
F) Cylindrical sleeve bolt * 1
G) M4 x 25mm cross flat head bolt *1
H) M4 x 30mm cross flat head bolt * 3
I) M4 x 10mm cross flat head bolt * 2
J) M4 x 25mm cross flat head self-tapping screw * 4
K) Mechanical key * 2
L) Strike plate * 1
M) Latch holding plastic box * 1

Installation Diagram

Step 1 According to the map drilling holes on the door.

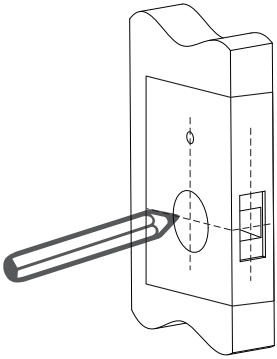

• Note:
1) Check the required backset (60mm or 70mm).
2) Align the template along the vertical center line of the deadbolt(E) at the desired height,and tape it to the door.
3) Mark the holes first, then start drilling.

Step 2 Install the deadbolt (E) with screws (J) on the door.

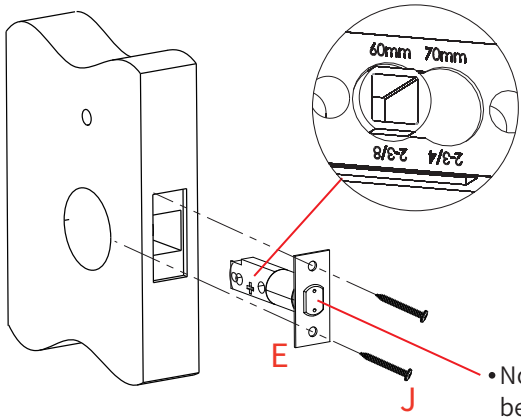

- Note:
  The deadbolt has TWO backset options: 60mm or 70mm, please adjust it by yourself.

- Note: DO NOT Push the latch out before installation.

Step 3 Install outdoor unit(A) with cylindrical sleeve bolt(F)and gasket(B) on outdoor unit(A).

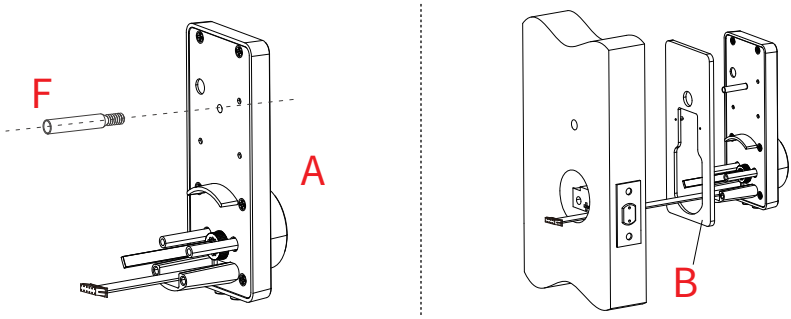

Step 4 Install mounting plate (C) with M4 cross flat head bolt (H) on the door.

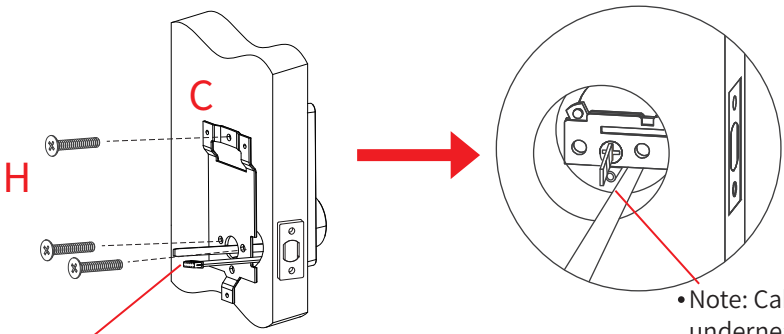

- Note: Cable goes underneath deadbolt.

- Note: The cable goes through the notch on the lower right part of the mounting plate at first.

Step 5 Install indoor unit(D) with M4 cross flat head bolts(I、G) on the door.

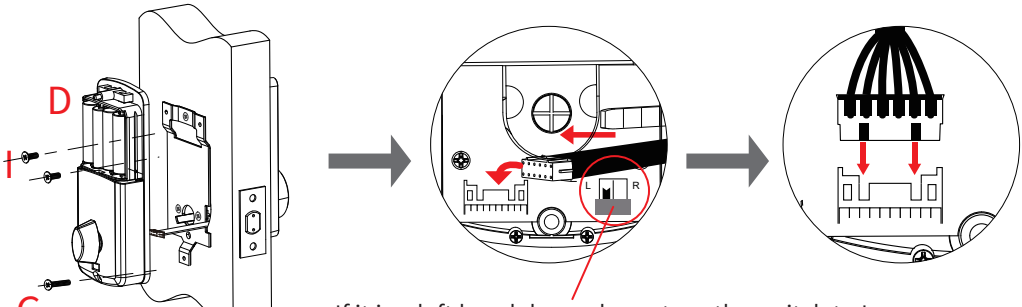

- If it is a left hand door, please turn the switch to L.
  If it is a right hand door, please turn the switch to R.

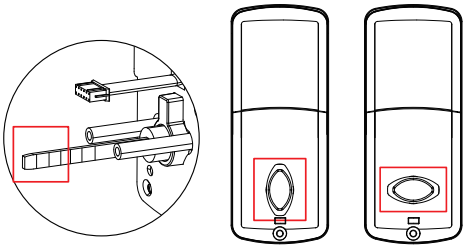

- Note:(1) If it's a RIGHT opening door lock, pls put the lock spindle VERTICALLY into the hole connected to the knob at the indoor unit of the lock, and the rotating part of the knob should also be turned to VERTICAL position.
  (2) If it's a LEFT opening door lock, pls put the lock spindle VERTICALLY into the hole connected to the knob at the indoor unit of the lock, but the rotating part of the knob should be turned to HORIZONTAL position.

Step 6 Install 4 pieces AA Alkaline batteries.

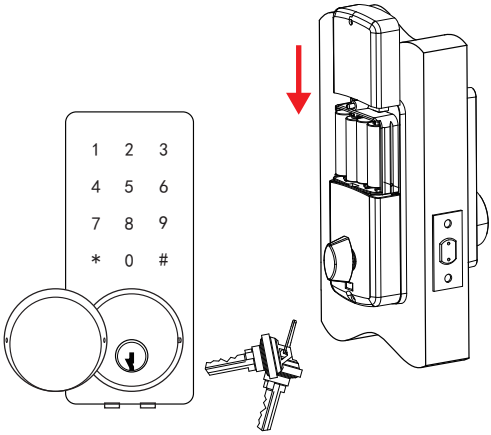

- Testing the lock by rotating the knob on unit D and using mechanical key(K).

Step 7 Mark and drill holes for strike.

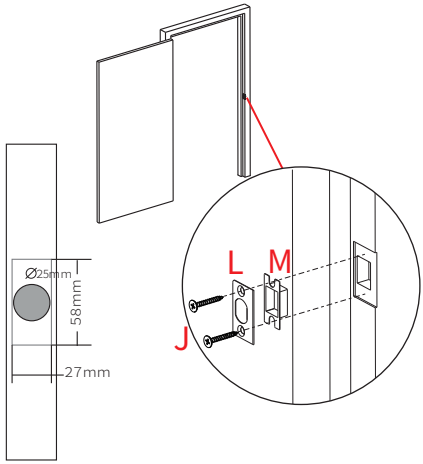

Feartures

- **Accessing** - Three ways to access the lock: Bluetooth access, Pin code & Mechanical key.
- **Safety** - There are multiple safety mechanisms within the lock.
  a) Auto Lock: After an unlocking, S110BBL can lock automatically after a period of time (can be 5s, 10s, 30s, 60s or custom seconds, the time can be set via the smart phone App)
  b) Keypad Locked: After 6 failed pin code attempts, the keypad will shut down for 3 minutes before being able to attempt the pin again. Mechanical key and Bluetooth Unlock can be used to unlock in this state.
  c) Privacy Lock out Mode: There is also a button under the knob of back panel, which is a privacy lock out mode, which essentially is a 'do not disturb' mode, this will make the lock no longer accept pin codes or bluetooth ekeys except for mechanical key.
  ①If you press the security lock button for over 2 seconds and activate the privacy lock out mode(keypad can't input pin code any more), people won't be able to get in from outside.
  ②If you want to deactivate it, just turn the knob once or press the security lock button for over 2 seconds, people from outside will be able to get in with pin code or bluetooth again.
- **Randomizer** - Before you enter your password, you can push some random numbers to prevent the password from being inferred based on the fingerprints on the frequently pushed numbers and from being seen by anyone nearby.
- **Emergency Power Supply** - Emergency power supply interface equipped on the front bottom side of the smart lock: to unlock the door temporarily by connecting to the emergency power supply interface with a 9V backup battery.
- **Real Time Record** - You can manage your passcodes and check unlock records in real time on your App.

Product Profile

Specifications

Material	Zinc Alloy	Model NO.	S110BBL
Door thickness	38mm-48mm	Code Length	6~12 digits
Woring Temperature	-20°C~70°C	Working Humidity	20%~80%RH
Working Power Consumtion	＜200mA	Static Power Consumption	＜30uA
Power Supply	6V (4pcs AA Alkaline Batteries not included)		
Unlocking Methods	Bluetooth Access, Passcode & Mechanical Key		
User Capacity	1 Admin Passcode		
	Unlimited Bluetooth eKey users		
	150 custom & permanent passcodes (other types of passcodes are unlimited)		
Product Dimension	Front	60(W) x 137(H) x 29(D) mm	
	Back	67(W) x 164(H) x 30(D) mm	

★ All specifications are subject to change without notice. All rights reserved.

1. APP Installation and Registration

1.1. Download the "TTLock" App form Google play store or Apple store.
2.2. Install and register an account with your phone number or email.

Note: The APP only supports Android 4.3 / IOS7.0 version and above. Once you pair a device with your phone/account, the device will not be able to link to other accounts, unless you remove the link from the App.

2. APP Connection

2.1. Turn on the Bluetooth on your phone.
2.2. Open the APP. Then click “Add Lock” and “Lock”.
2.3. Touch the touch screen button of the smart lock to activate lock, the number keys indicator light will be bright and Click “Next”on the APP.
2.4. Find the smart lock name which starts with “xx_xxx” and click “+”.
2.5. Rename the name of smart lock and click “OK”, then Click “Finish”.

Note:
(1) If you do not see the + sign, it means that that device has already been paired with another phone / account and cannot be linked to your phone. You will need the previous owner to remove the device from the account or transfer control of the device to your account. Also, remember that your phone must be connected to the internet (3G / 4G / Wifi) when ADD / LINK a new device.
(2) Remove a Bluetooth Admin: The reset button is on the backside of front panel, right behind the number 4 on the touchpad. Keep pressing the reset button with a piece of long and thin needle for over 5 seconds, your smart lock system will be restored to factory default settings and delete all smartphones and fobs from the memory.

3. APP Operation Instruction

3.1. Send eKey
eKey is a function for you to authorize the Admin rights to other members, who has download the same APP in their own phones.All the people who holds can control the smart lock.
3.2. Generate Passcode
The passcode receiver can unlock the smart by entering the passcode manually. The passcode can be set as different type:Permanent /Timed / One-time(6 hours) /Erase (24 hours) / Customized / Recurring . All passcodes generated can be sent to those in need by mail and chatting tools.

3.3. eKeys: A file to manage the status and history of eKeys.
3.4. Passcodes: A file to manage the status and history of Passcodes.
3.5. Records: View locking and unlocking information to check when and who used it.
3.6. Authorized Admin: Authorize the admin to the users who can operate the lock as an A dmin user.
3.7. Setting
3.7.1. Basics: Display the Lock Number, MAC/ID, Battery lever, Lock Name(you can manually change name of the door), Lock Group(he administrator can add multiple locks for grouping,which is suitable for rental housing. It is more convenient for group management of personnel), Admin Passcode(the default passcode is the unlock passcode of the administrator, which can be manually changed to a custom passcode).
3.7.2. Auto Lock: Off-by-default. Open the App-click Setting, click Auto Lock-turn on and set time to 10S, 15S, 30S, 60S or Custom seconds you need, then click OK. When the setup is completed, it will be automatically locked after unlocking (for example, it will be automatically locked 10 seconds after unlocking if the time is set as 10 seconds).
3.7.3. Lock Clock: Calibrate time of the lock.
3.7.4. Diagnosis: Analyse the problem of the lock.
3.7.5. Read Operation Records: This operation will read all records stored in the lock.
3.7.6. Firmware Upgrade: to check whether there is any update version.
3.7.7. Unlocking Notification: On-by-default. If this function is on, the administrator's phone will receive the unlocking information when someone who assigned with a key unlocks the door with the APP.

3.8. System Settings
3.8.1. Sound: On-by-default, you can manually close it to turn off App system unlock operation sound.
3.8.2. Touch to Unlock: Off-by-default, this function is invalid when the “ttlock” APP is turned off or running on the background of your phone. When the APP is open and connect within 10 meters from the lock, any family members can unlock the door by pressing any one touch screen button for at least 2 seconds. It is recommended to close the option if you do not need it.
3.8.3. Lock Users: You can check your lock users here.
3.8.4. Lock Group: the administrator can add multiple locks for grouping, which is suitable for rental housing. It is more convenient for achieving group management of personnel. It can be modified or deleted if not needed.
3.8.5. Transfer locks: This function is used to transfer the administrator rights. Once transferred, you will not the administrator again.
3.8.6. Transfer gateway: This function is used to transfer the gateway. Once transferred, you will lose the right for managing the gateway.
3.8.7. Languages: App system language setting.
3.8.8. Screen Lock: After the function is turned on, you need to use your fingerprint or account password to open the the lock App. No need to verify again within 3 minutes.

Operation Instructions for Different Functions

1. Unlock

1.1. Unlock with APP: Turn on the app and click the lock icon in the interface to unlock it (The phone should be within 10 meters from the door lock).
1.2. Unlock with passcode: enter the numeric passcode and then press the # key to confirm the unlocking (The Admin Passcode can be set in the APP setting).
1.3. Unlock by touching the keypad: Open the APP, then turn on the “Touch to Unlock option” in the System Settings. Touch the keypad to unlock the door (The phone is required to be connected to WiFi or mobile data network and within 10 meters from the door lock).
1.4. Unlock by mechanical key: use a pointed object to open the circular keyhole which is under the touch screen button then insert the key to unlock it.
1.5. Unlock manually: manually twist the knob on the Back panel to unlock it.

2. Lock

2.1. Lock with APP: Turn on the App, press and hold the lock icon for 5 seconds to lock it. (The phone should be within 10 meters from the door lock).
2.2. Auto Lock: When you turn on the “Auto Lock” option in the APP and set the auto lock time, the lock will be locked automatically after you unlock the door.
2.3. Lock with the # key: press and hold the # key on the front panel keypad for 3 to 5 seconds to lock.
2.4. Lock by mechanical key: use a pointed object to open the circular keyhole which is under the touch screen button then insert the key to lock it.
2.5. Lock manually: manually twist the knob on the Back panel to lock it.

3. Modify the Administrator’ s Unlocking Passcode

Open the APP - locate the lock you want to change admin passcode - click Setting - click Basic - click Admin Passcode - enter the new passcode with 4-9 numerical digits - click OK (The phone is required to be connected to WiFi or mobile data network and within 10 meters from the lock).

4. Remote Authorization of ekey

Turn on the APP - click Send eKey - select the ekey type as "Timed" or "Permanent" - Enter the APP account of the recipient-click Send button.
(The phone is required to be connected to WiFi or mobile data network)

5. Switch Administrator

5.1. Delete the Administrator right

Open the APP- locate the lock - click Setting - click Delete - enter your account password - click OK - Using a new phone to pair the lock again. A lock can only be paired with one administrator phone. Please stand within 10 meters away from the lock to open and connect the APP.

5.2. Switch through the Transfer locks function.

Turn on the APP - click System Settings - click Transfer Locks - Select Locks - click Next - enter the recipient's APP account and the verification code - click Next - Finish (The phone is required to be connected to WiFi or mobile data network & within 10 meters from the lock).

6. Freeze / Delete / Authorize / Name / Operate Already Sent ekeys by Administrator

Turn on the APP- click eKeys - click the ekey that has been sent - click Name / valitidity / delete the eKey info you need - clicking the menu on the upper right corner to conduct the freeze / authorization operation. (The phone is required to be connected to WiFi or mobile data network.)

7. Remote Authorization of Passcode

Turn on the APP - click Send passcode - select the type of the passcode (Permanent / Timed / One-time / Custom / Recurring) - click Generate. Then it will create a passcode. You can send the code to others by SMS, email and other chatting tools.(The phone is required to be connected to WiFi or mobile data network.)

8. Delete Already Sent Passcode by Administrator

Turn on the APP - click Passcodes - select the passcode that has been sent - delete the passcode (The phone is required to be connected to WiFi or mobile data network and within 10 meters from the lock).

9. System Reset

The reset button is on the backside of front panel, right behind the number 4 on the touchpad. Keep pressing the reset button with a piece of long and thin needle for over 5 seconds, your smart lock system will be restored to factory default settings and delete all smartphones and fobs from the memory.

Q: How can I reset my ttlock app account if I forgot my password?

A: 1. Open the ttlock lock App, click Forgot password, enter the email address you registered for your ttlock account.
2. Enter a new password, check Get code. You should receive verification code in the email, Enter the verification code to reset your password. Use the new password to sign in the account.

Q: Can I still use the smart lock when my phone is lost or turn off?

A: 1. Yes. You can still use the traditional physical key or password to lock / unlock the door.
2. Use a new phone to download the App, Sign in your App account with the email or phone number and password. Enter the verification code, then you can use the new phone to unlock the door. Don’ t forget to reset the door after you unlock it.

Q: The door won’ t lock automatically when I close it.

A: 1. Check if Auto Lock is set. If not, press and hold the # key on the panel keypad for 3 to 5 seconds to lock the door.
2. If the door doesn’ t lock automatically when Auto Lock is set, then the lock has been installed incorrectly.
3. The Auto Lock function is not activated when the batteries are completely discharged. Check if the batteries are discharged.

Q: Lock configuration failed.

A: 1. Remove the mechanical key from the cylinder.
2. Check that the door was closed properly or if lock operation was interfered.

Q: The App is disconnected from the door unit and / or I can't find my lock on the App.

A: 1. Close the App, turn off your phone's Bluetooth. Then turn Bluetooth back on, and open the App.
2. Refresh the App.
3. The lock can only be connected to one user's App. It's possible that another user's phone App is already connected to the lock. If don't know which user is connected to it, you have to reset the lock.

Q: The smart lock has started beeping whenever I lock or unlock the door.

A: This is an indication your battery is low; it's time to change the batteries.

Q: I'm unable to open the door from a distance of 10 meters / yards

A: 1. The app works via a Bluetooth connection, which can be impacted by the environment.
2. For both security and functionality reasons, try moving as close as possible to the lock."
3. The battery is low, use the emergency power supply for the door.

Important Safeguards

1. Read all instructions in their entirety.
2. Familiarize yourself with all warning and caution statements.
3. Remind all family members of safety precautions.
4. Always have access to your lock' s standard key.
5. If using the Lock with the # key or Auto-Lock features, make sure to have your smartphone, passcode or standard key with you to prevent locking yourself out.
6. Replace low batteries immediately. Preventing Inadvertent Unlocking of Your Door.

WARNING

Failure to follow these safeguards could result in your lock opening inadvertently.
1. Avoid keeping and storing phones and fobs unnecessarily close to the lock when inside the home.
2. Restrict access to your lock' s back panel and routinely check your settings to ensure they have not been altered without your knowledge.
3. Protect the password to your ttlock app and your account.
4. When sending an eKey, always double-check that you are sending it to the correct recipient.
5. Protect and restrict access to your smartphone so that your app settings cannot be altered without your knowledge.
7. When sending eKeys, be aware of the difference between an Admin user and other users in the system. The Admin user can send, disable and delete eKeys.
8. If your smart phone is lost or stolen, reset your lock. Resetting your smart lock system will restore your lock to factory settings and delete all smart phones and fobs.

FCC Statement

This device complies with part 15 of the FCC rules. Operation is subject to the following two conditions: (1) this device may not cause harmful interference, and (2) this device must accept any interference received, including interference that may cause undesired operation.

Changes or modifications not expressly approved by the party responsible for compliance could void the user's authority to operate the equipment.

NOTE: This equipment has been tested and found to comply with the limits for a Class B digital device, pursuant to part 15 of the FCC Rules. These limits are designed to provide reasonable protection against harmful interference in a residential installation. This equipment generates uses and can radiate radio frequency energy and, if not installed and used in accordance with the instructions, may cause harmful interference to radio communications. However, there is no guarantee that interference will not occur in a particular installation. If this equipment does cause harmful interference to radio or television reception, which can be determined by turning the equipment off and on, the user is encouraged to try to correct the interference by one or more of the following measures:

•Reorient or relocate the receiving antenna.

•Increase the separation between the equipment and receiver.

•Connect the equipment into an outlet on a circuit different from that to which the receiver is connected.

•Consult the dealer or an experienced radio/TV technician for help.

Radiation Exposure Statement

To comply with FCC RF exposure compliance requirements, this grant is applicable to only mobile configurations. The antennas used for this transmitter must be installed to provide a separation distance of at least 20cm from all persons and must not be co-located or operating in conjunction with any other antenna or transmitter.