SENSORS &
LIGHTING CONTROL

HYTRONIK®

HYTRONIK INDUSTRIAL LIMITED
Room D, 10/f, Tower A, Billion Center, 1 wang Kwong Road,
Kowloon Bay, Kowloon, Hongkong
T: 00852-35197525 F: 00852-30116936
E: info@hytronik.com

CHINA FACTORY
3rd Floor, block C, complex building, 155#, Bai'gang road south,
Bai'gang village, Xiao Jin Kou town, Huicheng district, Huizhou 516023
Tel:86-752-2772020 F:86-752-2777877
E: info@hytronik.com W:www.hytronik.com

INSTRUCTION MANUAL FOR RF WIRELESS SENSOR DETACHED VERSION, MODEL NO.: HN020-01V / HN021-01V / HN022-01

Technical Specifications

PRODUCT TYPE:	Microwave Motion Sensor
OPERATING VOLTAGE:	12VDC/50mA
HF SYSTEM:	5.8GHz CW radar
DETECTION ANGLE:	30° ~ 150°
POWER CONSUMPTION:	<1W
DETECTION RANGE (DxH):	Max. 16 x 12m
HOLD TIME:	30s ~ 30min.
DAYLIGHT SENSOR:	2 ~ 500Lux; disable
STAND-BY PERIOD:	0s, 10s ~ 1h, + ∞
STAND-BY DIMMING LEVEL:	10% ~50%
MOUNTING:	Indoors, ceiling & wall mounted
WORKING TEMP.:	-20 ~ +60℃
MODEL:	HN020-01V Microwave / constant illumination HN021-01V Microwave / constant illumination+ RF(868MHz) HN022-01V Microwave / constant illumination+ RF (UL 915MHz)

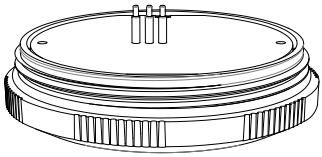

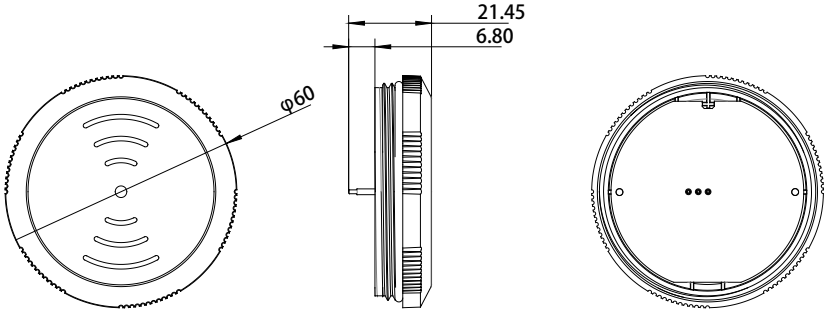

Microwave mount

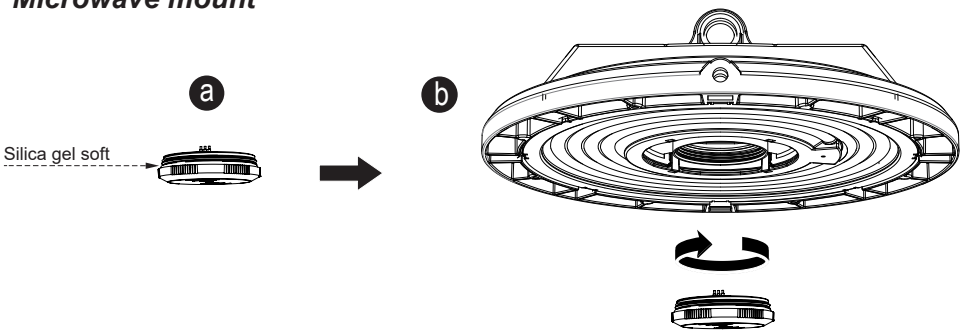

Detection Pattern

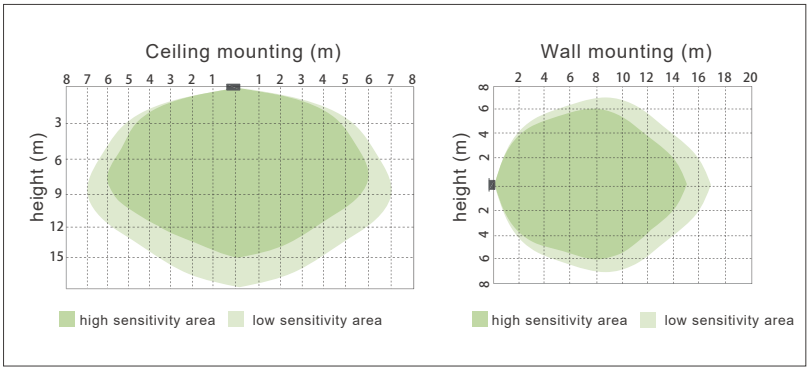

SECTION 1 TYPICAL APPLICATIONS

Typical Applications

A ULTRANIK ▶ HF motion detector

Daylight Harvest

The motion detector can turn on the light based on movement. With this detector built in, light is automatically on when needed and dimmed to preset level before it is totally off.

The light keeps off during daytime even when movement is detected. (Ambient lux level is above preset daylight threshold)

With movement and insufficien tambient lux level, the light is triggered on 100% by the detector.

The sensor highbay turns on at full or dims to maintain the lux level.
The light output regulates according to level of natural light available

If there is no more movement, the light dims to stand-by dimming level after hold-time.

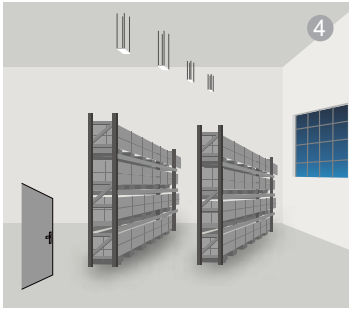

The light turns off automatically after stand-by time.

B For staircase and corridor (master and slave)

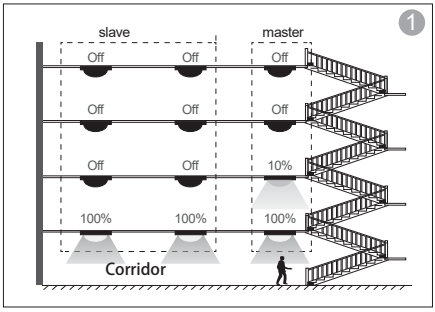

While the 1st sensor detects motion on the 1st floor, it switches the light on at 100% and sends signal to all slave units. All slaves on the 1st floor turn on and the sensor highbay on the 2nd floor switches on at stand-by level.

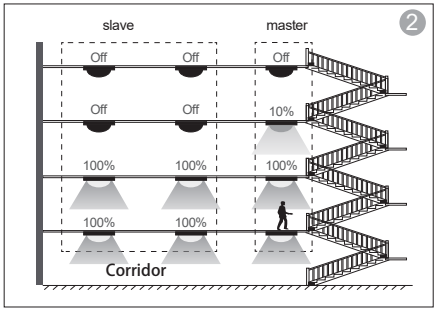

The person walks to the 2nd floor, the 2nd Sensor highbay switches the light on at 100%. All slaves on the 2nd floor turn the light on and the Sensor highbay on the 3rd floor switches on at stand-by level.

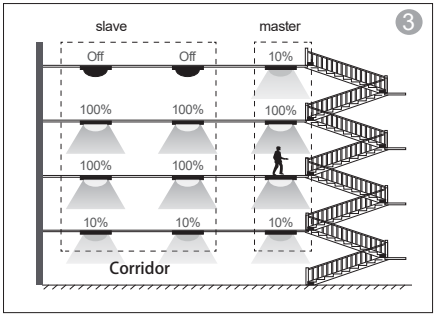

The person walks to the 3rd floor, the 3rd sensor highbay switches the light on 100%. All slaves on the 3rd floor turn the light on and the Sensor highbay on the 4th floor switches onat stand-by level. Meanwhile, the lights on the 1st floor are dimmed to stand-by level after hold-time.

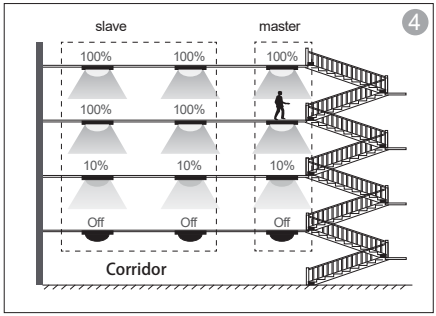

The person walks to the 4th floor, the 4th sensor highbay switches the light on at 100%. All slaves on the 4th floor turn the light on Meanwhile, all sensors on the 1st floor turn the light off after stand-by period, and all lights on the 2nd floor dim to stand-by level after hold-time.

SECTION 2 REMOTE CONTROL

Permanent ON/OFF [button ①]
Press button ① ,to select permanent ON or permanent OFF mode.
* Press button ② / ④ to resume automatic operation.
The mode will change to AUTO Mode after power failure.

RESET[button ②]
Press button②, all settings go back to the default settings:
Detection range: 100% Hold time: 1min Stand-by period: 5min
Stand-by dimming level: 20% Daylight sensor: LUX disable

Shift [button③]
Press button③ , the LED on the top left corner will flash to indicate mode selection.
All values / settings in RED are valid for 20 seconds.

Auto Mode [button④]
Press button④ to initiate automatic mode. The sensor starts working and all settings remain as before the light was switched ON/OFF.

Semi-auto Mode [button③ & ④]
1. Press button ③Shift (the red LED is on for indication),
2. press button ④ to initiate semi-auto mode. The fixture is manually on by push-switch and automatically off in semi-auto mode.

Power output [button⑤]
Press button⑤ , the light output shifts between 80% and 100%.
Note: the function of “Sensor off” and “Twilight” are disabled.

Brightness +/- [button⑥]
Press button⑥ to adjust the light brightness between 10%~100% .

Scene prog. [zone ⑦] (One-key-commissioning)
1. Press button “start” to program.
2. Select the buttons in ⑧ “Detection range”, ⑨ / ⑩ “Daylight hreshold”, ⑪ “Hold time”, ⑫“Stand-by time”, ⑬“Stand-by dimming level” to set all parameters.

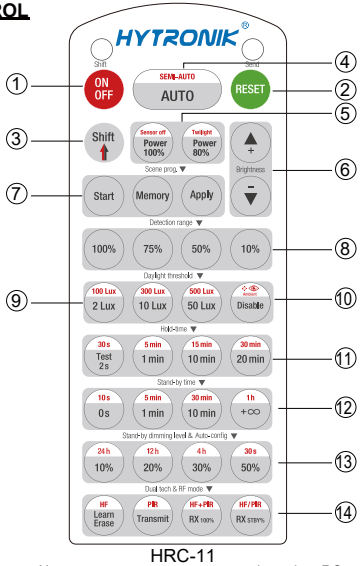

HRC-11
Note: the red LED indicator flash one time when RC receives signal successfully

3. Press button “Memory” to save all the settings programmed in the remote control.
4. Press button “Apply” to set the settings to each sensor unit(s). For example, to pre-set detection range 100%, daylight threshold Disable, hold time 5min, stand-by time +∞, stand-by dimming level 30%, the steps should be as follows: Press button ⑦ Start, button ⑧ 100%, ⑩ Disable, ③Shift, ⑪5min, ③Shift, ⑫ +∞, ⑬ 30%,⑦Memory. By pointing to the sensor unit(s) and pressing ⑦ Apply, all settings are passed on the sensor(s).

Detection range [zone ⑧]
Press buttons in zone ⑧ to set detection range at 100% / 75%/ 50% / 10%.

Daylight threshold [zone ⑨]
Press buttons in zone ⑨ to set the daylight sensor at 2Lux / 10Lux / 50Lux / 100Lux / 300Lux / 500Lux or Disable.
Note: To set daylight sensor at 100Lux / 300 Lux / 500Lux, p ress button ③Shift at first.

Ambient daylight threshold [button⑩]
1. Press button③ Shift, the red LED is on for indication.
2. Press button⑩ ,the ambient lux level is sampled and set as the new daylight threshold.

Hold time [zone ⑪]
Press buttons in zone ⑪ to set the hold time at 2s / 30s / 1min / 5min / 10min / 15min / 20min / 30min.
Note: 1. To set hold-time at 30s / 5min / 15min / 30min, press button③ Shift at first.
2. 2s is for testing purpose only, stand-by period and daylight sensor settings are disabled in this mode.
*To exit from Test mode, press button ② or anybutton in zone⑪.

Stand-by time [zone ⑫]
Press buttons in zone ⑫ to set the stand-by period at 0s / 10s / 1min / 5min / 10min / 30min / 1h / +∞.
Note: “0s” means on/off control; “+∞” means bi-level control, 100% on when motion is detected, and remains at the stand-by dimming level when no presence is detected after hold-time.

Stand-by dimming level [zone ⑬]
Press buttons in zone ⑬ to set the stand-by dimming level at 10% /20% / 30% / 50%.
Note: 24h / 12h / 4h / 30s are disabled.

Dual tech & RF mode [zone ⑭]
1. HF, PIR, HF+PIR, HF/PIR are disabled. 2. For RF grouping, please see below.

Sensor setting go back to default setting as followed, after press reset:
· Detection range: 100%
· Hold time: 5min
· Stand-by time: 10min
· Stand-by dimming level: 10%
· Daylight threshold: 300LUX

RF grouping

Short press “Learn/Erase” button on RC to activate pairing mode, and the receiver unit will flash once every second for 3min.

Note: the unit can only pair up to 30 units.

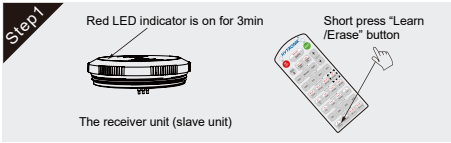

Short press “Transmit” button on RC, the commander unit (master unit) will flash one time to send the transmission signal.

Upon receiving the transmission signal, the receiver unit (slave unit) will rapidly flash 3 times in 1s to indicate the success of pairing. Repeat this step to pair more units. One more short press on “Learn/Erase” button to the receiver unit to complete the pairing process, the receiver unit will quit the pairing mode.

Note:
Press button RX100%, the light on receiver unit is 100% on upon receiving RF on signal; Press “RX STBY%” button, the light(s) goes to preset stand-by dimming level directly.`

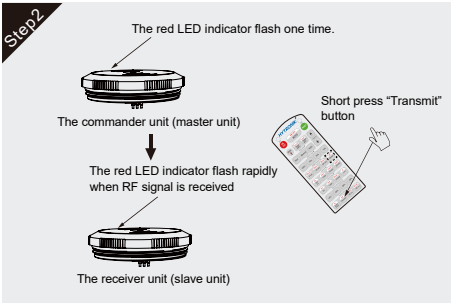

Erase:
Long press “Learn/Erase” button for 3s to the sensor unit. The red LED indicator rapidly flash for about 5s. all commands it has received before will be erased.

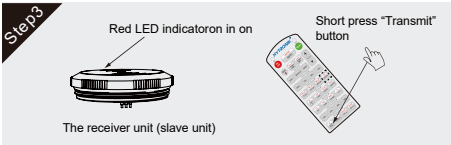

SECTION 3 TROUBLESHOOTING

MALFUNCTION CAUSE REMEDY	CAUSE	REMEDY
The fixture does not light up	Incorrect daylight threshold setting	Adjust daylight threshold setting
	Faulty fixture	Replace fixture
	No power supply	Check power to sensor
The fixture is always on	Continous movement in the detection zone	Check detection area setting
The fixture is on when it should not	Sudden change in temperature due to weather (wind, rain, snow) or air expelled from fans, or open windows	Adjust zone, change installation site

FCC STATEMENT

This device complies with Part 15 of the FCC rules. Operation is subject to the following two conditions: 1) this device may not cause harmful interference, and 2) this device must accept any interference received, including interference that may cause undesired operation.

Changes or modifications not expressly approved by the party responsible for compliance could void your authority to operate the equipment.

The device has been evaluated to meet general RF exposure requirement, the device can be used in portable exposure condition without restriction.

NOTE: This equipment has been tested and found to comply with the limits for a Class B digital device, pursuant to Part 15 of the FCC Rules. These limits are designed to provide reasonable protection against harmful interference in a residential installation.
This equipment generates uses and can radiate radio frequency energy and, if not installed and used in accordance with the instructions, may cause harmful interference to radio communications. However, there is no guarantee that interference will not occur in a particular installation. If this equipment does cause harmful interference to radio or television reception, which can be determined by turning the equipment off and on, the user is encouraged to try to correct the interference by one or more of the following measures:

Reorient or relocate the receiving antenna.

Increase the separation between the equipment and receiver.

Connect the equipment into an outlet on a circuit different from that to which the receiver is connected.

Consult the dealer or an experienced radio/TV technician for help.