Robotic Vacuum Cleaner

Operation Manual

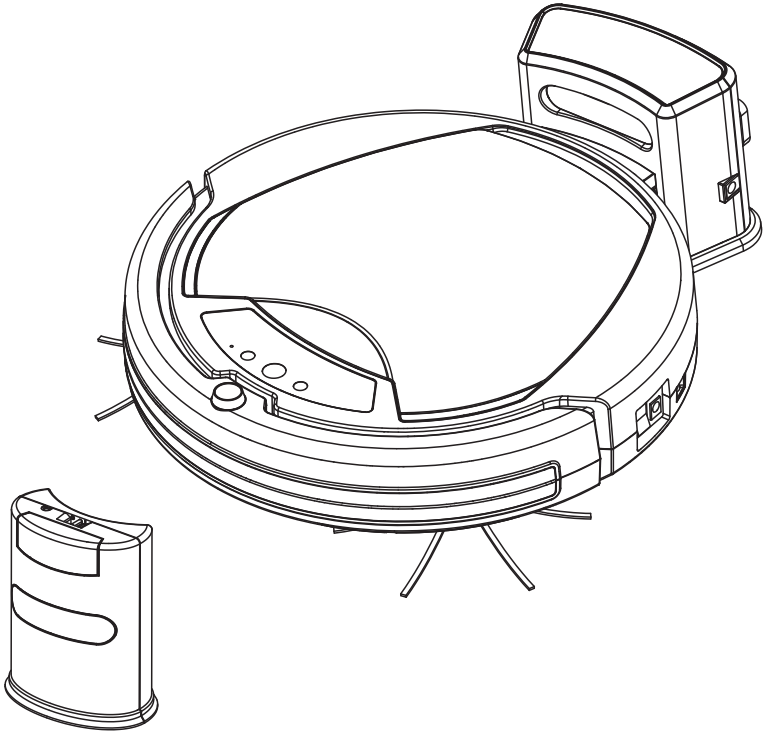

M680GMA

TABLE OF CONTENTS

SAFETY INSTRUCTIONS ---------- 2

* Safety Instructions
* FCC Caution
* Battery and Recharging Instructions

WARNING ---------- 9

SPECIAL FEATURES ---------- 10

MAJOR COMPONENTS AND ATTACHMENTS ---------- 10

M680GMA OVERVIEW ---------- 11

INSTALLATION GUIDE ---------- 12

* Installing and Removing Side Brush
* Battery Installation and Removal
* Recharging Battery
* Proof Test
* Preparation of Room Containment

GENERAL OPERATION ---------- 17

* Preparation for Operation
* Control Panel
* Download APP and scheduling setting
* Basic Operation

CLEANING AND MAINTENANCE ---------- 22

* Maintenance Method
* Cleaning Dust Bin
* Cleaning Intake
* Cleaning Side Brushes
* Cleaning TPE Roll Brush
* Maintenance of Main Wheels

TROUBLE SHOOTING ---------- 28

WARNING OF BATTERY & ADAPTOR USAGE ---------- 29

SAFETY INSTRUCTIONS

Please read the safety instructions in the Operation Manual before operating M680GMA and keep this manual handy for your future reference. Observe the basic safety rules to prevent any occurrence of fire, electric shock and personal injury.

Safety Instructions:

1. Please read the Operation Manual before operating M680GMA.
2. Do not operate M680GMA outdoors.
3. Before starting M680GMA, be sure to install M680GMA dust bin filter properly in case of any damage of M680GMA.
4. Do not operate M680GMA on wet floor or in moisture conditions, e.g. bathroom. Water and moisture could damage the circuit board in M680GMA.
5. Prior to operate M680GMA remove any loose articles on the floor such as clothes, paper, loose cables, and extension cords as well as making sure to lift curtains and drapes off the floor to avoid any possible accidents. In case of a loose cable is tangled with M680GMA the cable might move around with M680GMA as M680GMA works and topple down the table, chairs, or cabinet and cause property damage.
6. Never stand or sit on M680GMA. Beware of children or pets while M680GMA is in operation.

7. Never use M680GMA to clean up sparking cigarette butts or burning ashes from fireplace.
8. Never use M680GMA to clean up combustible or highly volatile liquids such as gasoline.
9. While M680GMA is in operation, make sure all doors leading outside are closed.
10. During operation, the heat vent should avoid being clogged. If heat vent clogged, M680GMA could be damaged.
11. If M680GMA is malfunctioned or damaged by force, do not operate M680GMA regardless the cause.
    Please call your local dealer for service information.
12. Turn off the power and remove the battery from M680GMA if the unit will not in use for a long period of time.
13. This appliance can be used by children aged from 8 years and above and persons with reduced physical, sensory or mental capabilities or lack of experience and knowledge if they have been given supervision or instruction concerning use of the appliance in a safe way and understand the hazards involved. Children shall not play with the appliance. Cleaning and user maintenance shall not be made by children without supervision.
    ---Children should be supervised to ensure that they do not play with the appliance.

14. **WARNING:** the plug must be removed from the socket-outlet before cleaning or maintaining the appliance.
15. Automatic battery-operated cleaners shall also be provided with cautionary instructions for room preparation and constant care.
16. Make sure that the appliance can be worked freely in the room (shall not be blocked or overturned etc…) and make sure that there is nothing that the appliance can overturn and create a hazard (clear all Candle, Vase with or without water and fragile objects etc…that placed on the floor or furniture).

SAFETY INSTRUCTIONS

FCC Caution:
This device complies with part 15 of the FCC Rules. Operation is subject to the following two conditions: (1) This device may not cause harmful interference, and (2) this device must accept any interference received, including interference that may cause undesired operation.
Any Changes or modifications not expressly approved by the party responsible for compliance could void the user's authority to operate the equipment.

Note: This equipment has been tested and found to comply with the limits for a Class B digital device, pursuant to part 15 of the FCC Rules. These limits are designed to provide reasonable protection against harmful interference in a residential installation. This equipment generates uses and can radiate radio frequency energy and, if not installed and used in accordance with the instructions, may cause harmful interference to radio communications. However, there is no guarantee that interference will not occur in a particular installation. If this equipment does cause harmful interference to radio or television reception, which can be determined by turning the equipment off and on, the user is encouraged to try to correct the interference by one or more of the following measures:

- Reorient or relocate the receiving antenna.
- Increase the separation between the equipment and receiver.
- Connect the equipment into an outlet on a circuit different from that to which the receiver is connected.
- Consult the dealer or an experienced radio/TV technician for help.

SAFETY INSTRUCTIONS

RF warning for Mobile device:

This equipment complies with FCC radiation exposure limits set forth for an uncontrolled environment. This equipment should be installed and operated with minimum distance 20cm between the radiator & your body.

Battery and Recharging Instructions:

1. Please apply the same model's battery (D.C. Lithium-ion 14.8V 2900mAh) and adaptor (20V 1200mA) as equipped with the packing.
2. The external flexible cable or cord of this adaptor cannot be replaced; if the cord is damaged, the adaptor shall be scrapped.
3. When placing the batteries into the reservoir, please be sure that the polarity (+/- sign) of the batteries match with the indication marked inside the battery reservoir. Otherwise, the power cannot be switched on.
4. Forbid any un-rechargeable or different type/model battery. Applying un-rechargeable battery will cause the machine malfunctions.
5. The battery is rechargeable. Please use the voltage and current specified on the packing. If you are not sure of the voltage and current of your house, please contact your local power company or a licensed electrician.
6. Use only the battery supplied with your M680GMA.
7. Charging adaptor is for indoors only.
8. The appliance is only to be used with the power supply unit provided with the appliance.
9. Do not recharge the battery if the cable or plug of the battery is damaged.
10. Never touch the charger, plug or cable with damp hands.

11. If M680GMA requires cleaning, unplug the adaptor, switch off the unit and take out the battery.
12. The battery must be removed from the appliance before it is scrapped.
13. The appliance must be disconnected from the supply mains when removing the battery.
14. The battery is to be disposed of safely.
    Attention should be drawn to the environmental aspects of battery disposal. Don't throw used batteries in dustbin. Please contact your retailer in order to protect the environment.
15. Leakage from battery pack can occur under extreme usage or temperature conditions.
    If the liquid gets on skin, wash quickly with water.
    If the liquid gets into the eyes, flush them immediately with clean water for a minimum of 10 minutes. Seek medical attention.
    Contact a specialist dealer or Customer Services to replace the battery pack. Never replace the battery pack yourself.

WARNING

Following objects are strictly banned, otherwise the vacuum cleaner will be damaged or fire calamity will be caused, which bring such accidents as human body injuries:

- **Don’t pick up large or sharp broken such as glasses.**
- **Don’t pick up harming or erodent liquids (solvent, corrosive, detergent…).**
- **Don’t pick up inflammable or explosive substance such as gasoline or alcohol.**
- **Don’t pick up/ vacuum burning or glowing objects (cigarettes, matches, hot ashes).**

SPECIAL FEATURES

Congratulations on purchases the M680GMA Robotic Vacuum Cleaner. This revolution Robotic Vacuum Cleaner is equipped with functions suitable for cleaning up floor surfaces of home and office such as wood, tile, and linoleum.
M680GMA Robotic Vacuum Cleaner is a household helper.
Working Patterns:

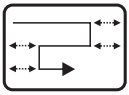
"Z" Type

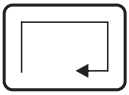
Along the wall

With Gyro and main wheel encoder sensors, M680GMA could build the simple map so It could clean your rooms and back to the dock station successfully when its power is low.
With Mobile APP, the real-time mapping could be shown on the APP. Also, the remote control could be made from APP too.

MAJOR COMPONENTS AND ATTACHMENTS

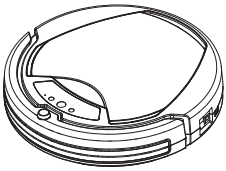
M680GMA Cleaner x1

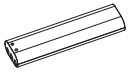
Rechargeable Battery x1

Adaptor x1

Dust Bin Filter x1
(1 pc Installed in the dustbin)

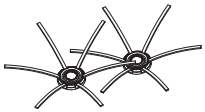
Side Brush x 2

Operation Manual x1

Docking Station x1

TPE Roll Brush x1

Room Containment x1

M680GMA OVERVIEW

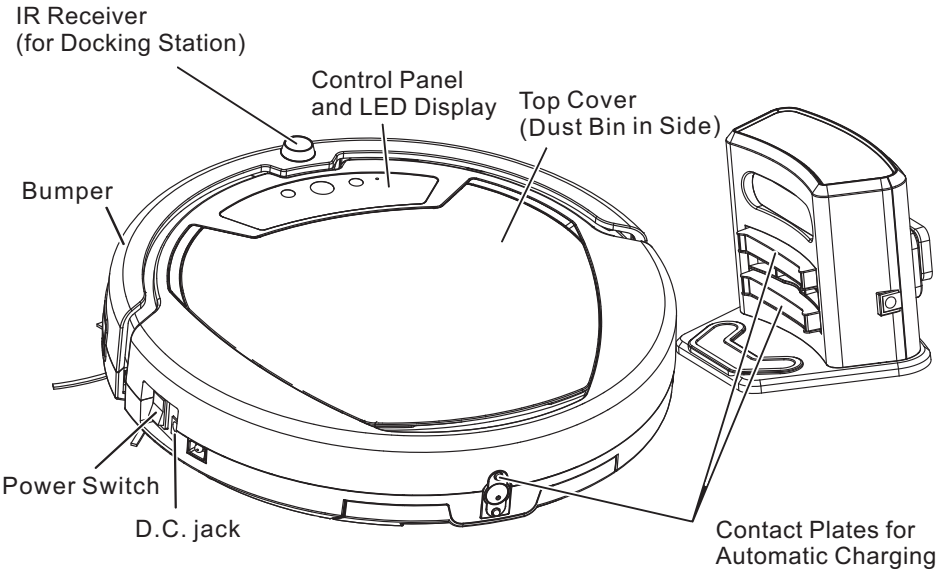

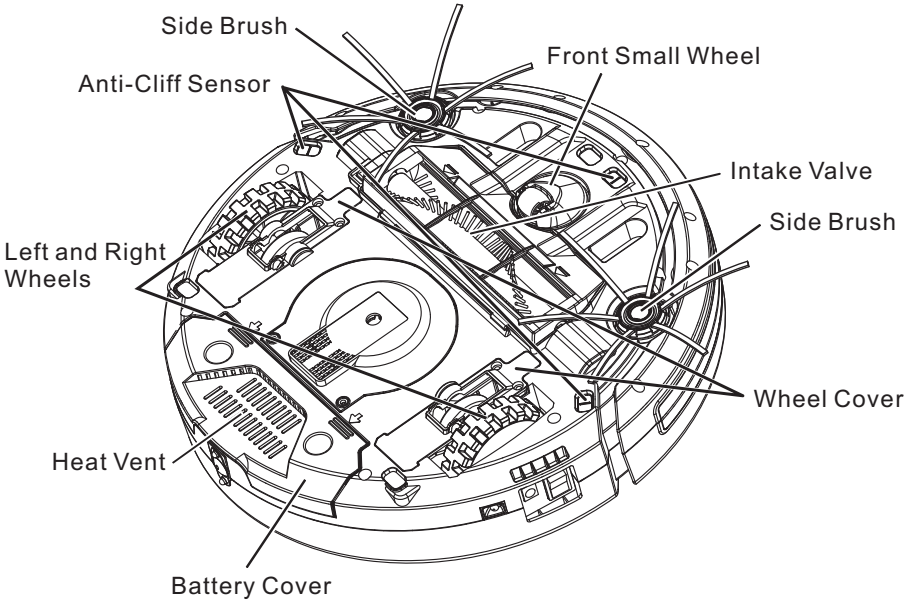

INSTALLATION GUIDE

Installing and Removing Side Brush:

To install: Push the brush directly onto the holder.(Fig. 1)

To remove: Hold two opposite sides of the brush as shown in Fig. 2, and evenly pull upward to remove the brush.

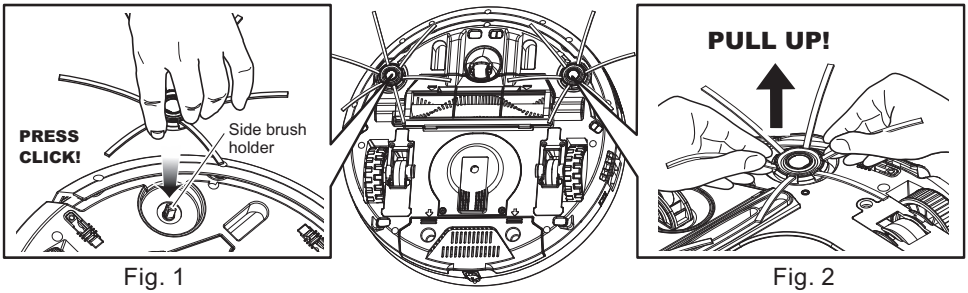

Fig. 1 Fig. 2

INSTALLATION GUIDE

Battery Installation and Removal:

1. Turn off the power switch before installing the battery.
2. **The details on how to remove the battery:** To open the battery cover first by pressing the two points “A” (marked in the below diagram) and slide the battery cover in the direction of arrow “B” (marked in the below diagram). Then push the battery toward the springs’ side in order to take out the battery easily.
3. **The method of replacing battery:** To install the new battery in the battery compartment with correct polarity + and – sign which marked on the battery compartment. Put to battery connecting dots side down close to the springs mounted on the battery compartment, then push toward springs for easier inserting the battery. Be sure to orient the battery contacts with those of the unit.
   Slide back the battery cover to close it.

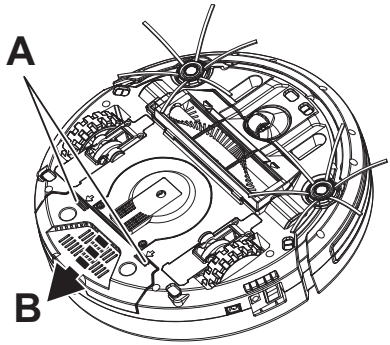

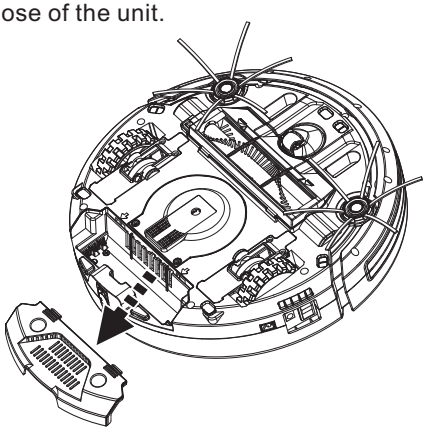

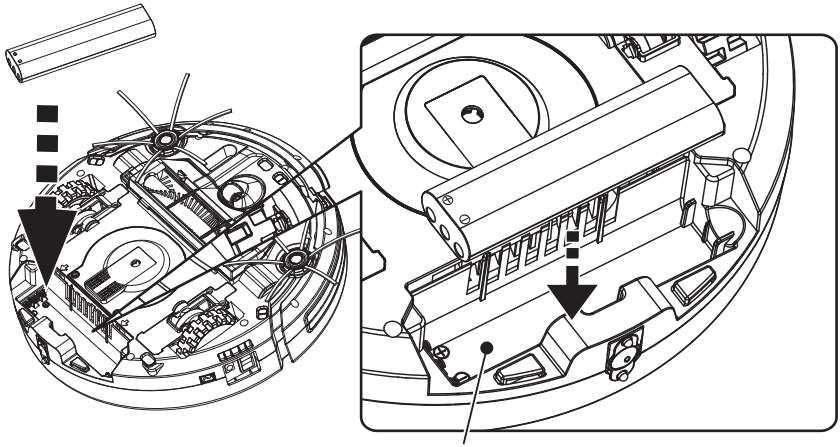

INSTALLATION GUIDE

Recharging Battery:

1. Before charging, please check if the battery is properly mounted **and turn on the power switch**.
2. Two ways to charge the battery:
   A. Push the adaptor plug into d.c. jack at the side of the unit first, and then plug the a.c end of the adaptor into the a.c. power outlet on the wall. (Please connect the adaptor to the unit first before connecting to the a.c power outlet.)

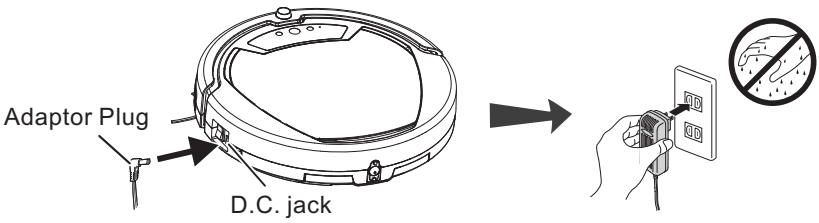

   B. Make sure the docking station is installed properly, place the unit to the docking station, make sure the contact points at the back of the unit is contacted with the contact plate at the docking station.(See page 15 proof test)
3. When charging, the LED indicator below the " ⏻ " (Power) on M680GMA (as above diagram) will flash green, and it will stay green when the cleaner has been uninterruptedly charged for 4~6 hours
4. To make sure the battery always at full charged status, the unit will be charged 15 min every hour after full.
5. When the M680GMA is in the "Battery Low" situation, " ⏻(Power) will stay in the RED.

INSTALLATION GUIDE

Proof Test:

Please try to test the installation of docking station, if the vacuum cannot go back to the docking station and charge successfully, then please replace the docking station to the proper height.

Test by the unit, turn on the power switch of the unit, Use ( ) on APP or press robotic control panel icon to control the robot go back to the docking station for recharging. Please refer to below picture.

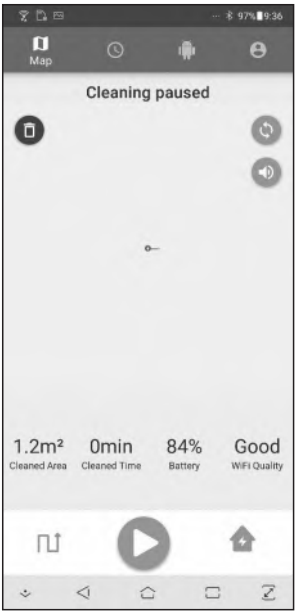

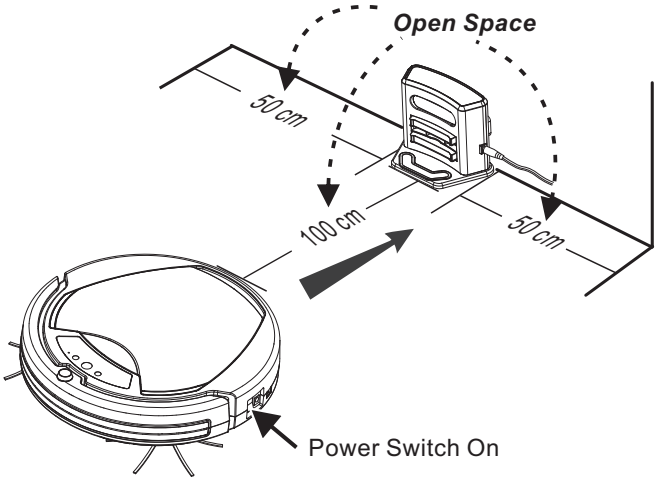

INSTALLATION GUIDE

Preparation of Room Containment:

1. Turn the power switch off.
2. Press two points mark A and slide the cover in the direction of arrow B as shown in the diagram below.
3. Insert four size AA batteries and match "+" and "-" to the battery compartment, then close the cover of the containment.

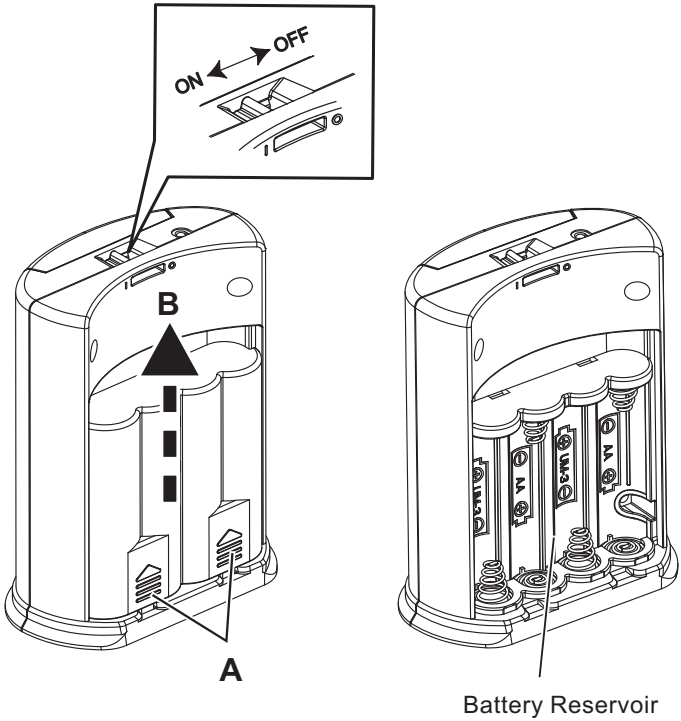

GENERAL OPERATION

Preparation for Operation:

1. Install the side brushes and install the battery according to the manual.
2. Turn on the power switch on the side of the unit, and charge the battery for 4~6 hours prior to the first operation.
3. To ensure the best efficiency of the unit, first is to remove clothes, paper, cable, extension cable scattered on the floor, roll up the curtains and drapes if any to avert the possible accident. In case of the cable entangled with the cleaner, the cable could move around as the cleaner is working and might topple down the table, chairs, even cabinet or cupboard.

※***When start the unit.***

→***Check:***

❶***. Dust bin is full.***

❷***. Intake Valve is stuck with dirt.***

❸***.Wipe out the inner and outside of Intake Valve area.***

Room containment of M680GMA may contain the cleaning area by putting it in a proper place.

For example:

To contain the Robot Cleaner cleaning area A (shaded area) and not crossing to area B by putting the Room containment in the position as shown in Fig. 3. And to contain area B (shaded area) by putting the Room Containment in the position as shown in Fig. 4.

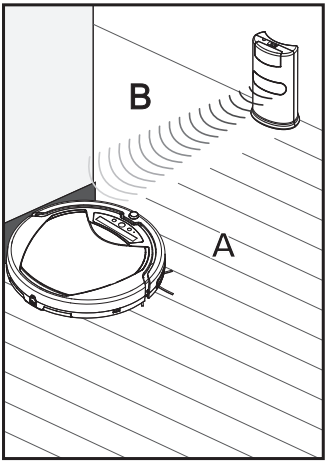

Fig. 3

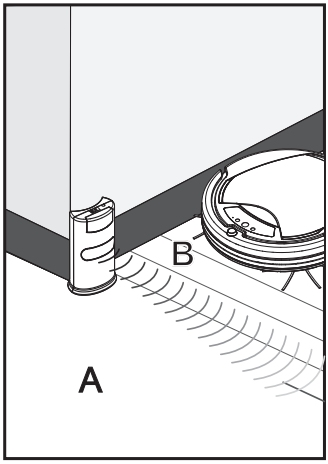

Fig. 4

1. Operation without connecting to the docking station:
   Place the cleaner on the floor and turn on the power switch then press the operation button to operate, press again to stop.
2. When battery low, the unit is programmed to find the docking station automatically for recharge. If the unit is failed to return to the docking station, user can put it back connecting to the docking station manually.
3. Press the “ ▶ ” key from APP or press robotic control panel power button to start clean.

GENERAL OPERATION

Control Panel:

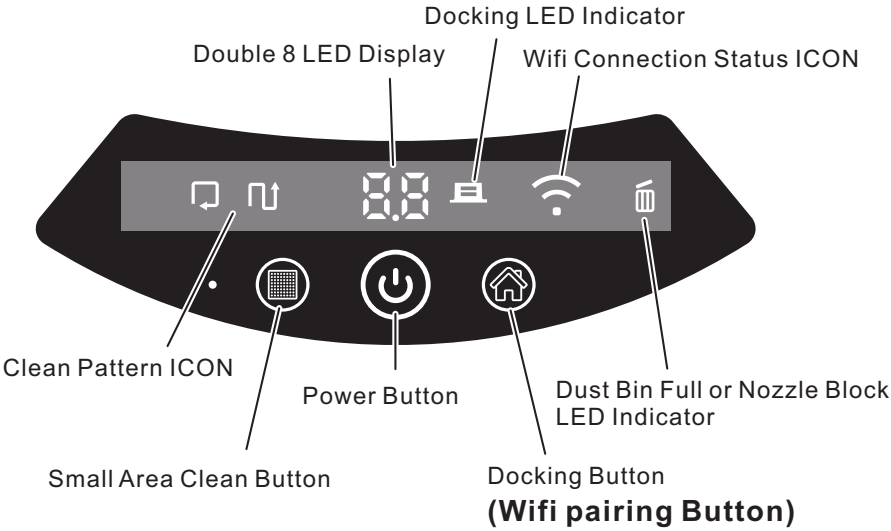

GENERAL OPERATION

Download APP and scheduling setting :

How to Download APP:

1. To download " SmartCleanerQ " APP from Playstore or APP store.
2. Scan the QR code and download APP.

Android

iOS

Scheduling setting from APP:

※The vacuum cleaner can function normally no matter Wi-Fi is connected or not.

GENERAL OPERATION

Basic Operation:

→***Manual work***

※***When 🗑 LED Indicator lights on.***

→ ***Check:***

❶***. Dust bin is full.***

❷***. Intake Valve is stuck with dirt.***

❸***. Wipe out the inner and outside of Intake Valve area.***

1. Turn ON the power switch, wait for ⏻ power LED light on(green).
2. Press ⏻ power key.
3. After work is completed, the unit will emit a buzz of warning . The unit stop or back to dock station for charging depends on the settings.
4. During the working time :
   (1) The unit will stop if the power key pressed at the control panel or the stop key is pressed on the APP.
   (2) If low power, the unit will Beep one time and Power LED will RED on. The unit will back to dock station for charging.
5. When the unit is at dock station or plug into adaptor:
   (1) Charging : the ⏻ power/time LED will show green flashing .
   Full charged : the ⏻ power/time LED will show green on .
   (2) At dock station :
   -Press (⏻) power key or use the Start key on the mobile APP to let the unit start to work.
   -The unit will try to re-find the dock station again if it kicked away from the dock station by careless. But the unit will stop if the dock station can't be found in the near area.

Stop operation

1. To stop the operation of the unit immediately, you can turn off the power switch on the right of the unit, or press unit control panel power button, or lift the unit off the floor, the unit will stop 1 second later.
2. If you want the unit to continue working, place the unit on the floor and reset the power switch of the cleaner.

Safety Devices

1. The unit will stop after 1 second lifted up from the floor.
2. The unit will stop when wheel jammed for more than 6~10 seconds.

Sleep mode

The unit stop and no key pressed in 3 minutes, unit into sleep mode. Any key pressed will wake up the unit.

GENERAL OPERATION

Table A: Error code on LED Display(Power LED flash Red)

Display on screen	Possible cause	Solution
E 1	The wheels stuck.	Remove M680GMA from obstacles, and Re-start the power switch.
E2	The top cover or dust bin is not installed properly.	Install the top cover and dust bin properly. The unit will detect the error and fix automatically .
E3	The bumper stuck.	Remove M680GMA from obstacles. The unit will detect the error and fix automatically .
E4	The unit lifted up from the floor.	Put M680GMA back on the floor.
E5	The unit stuck on the cliff or stair.	Remove the cleaner from dark floor surface.
E6	The battery is not installed properly. Charging error.(Power switch is off)	To install the battery properly, please refer to page 13 for battery installation, and Re-start the power switch.
E7	The main brush stuck.	Remove M680GMA from obstacles, or reinstall main brush and Re-start the power switch.

Table B: Buzz

Buzz	Represent
Beep 1 time	Normal
Beep 2 times	Invalid
Beep 3 times	Error

CLEANING AND MAINTENANCE

Maintenance Method:

The operation and maintenance of the M680GMA is very simple. After each use, clean any dirt left behind on the dust bin and filter. It is not necessary to clean the intake after every use.

Cleaning Dust Bin:

1. Lift up the cover at "A" in the direction as arrow "B" shown in below diagram to remove the Top Cover from the cleaner.

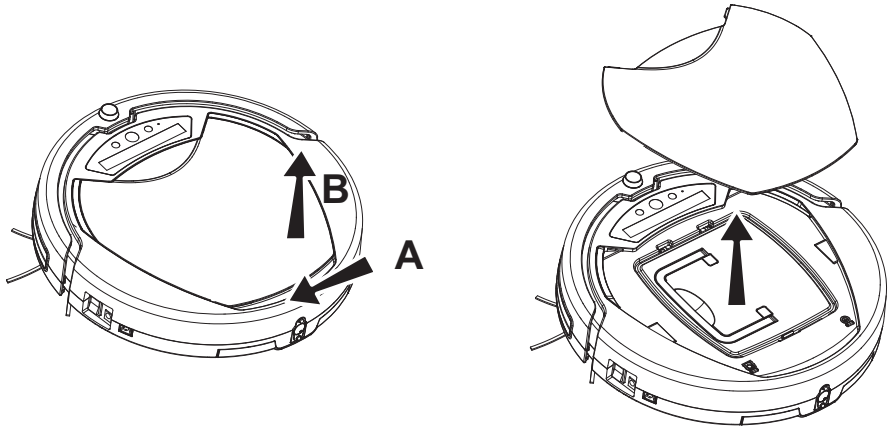

2. Pull up the grip and take out the dust bin from the cleaner.

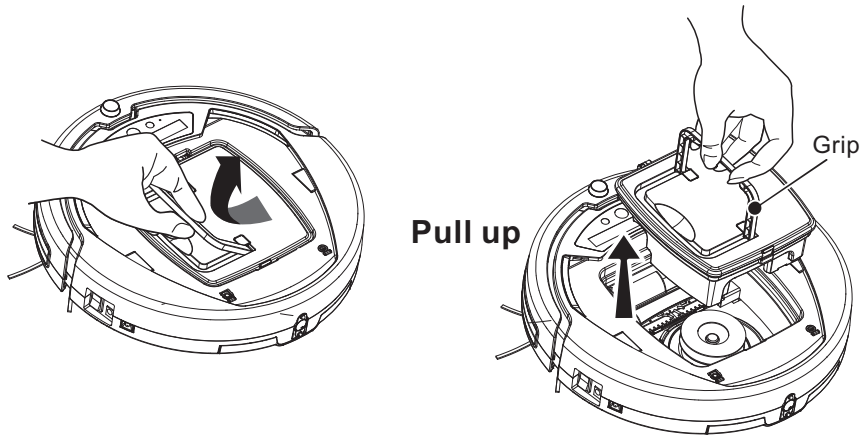

3. Open the upper cover of the dust bin.

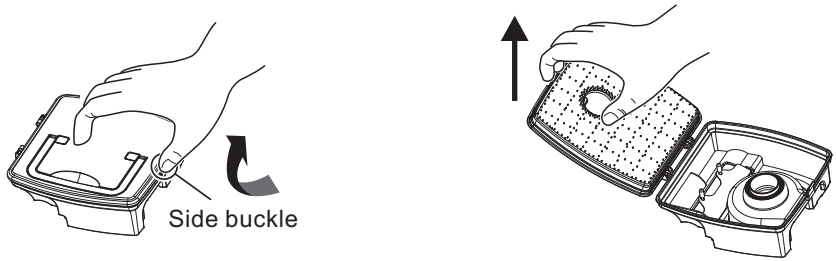

4. Lift up and take out the filter.

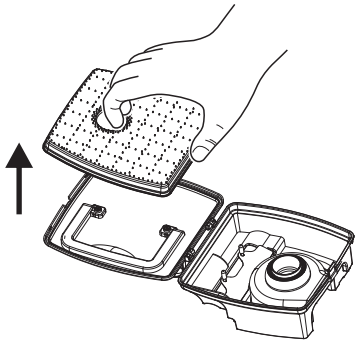
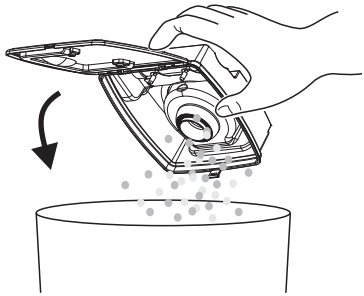
5. Throw away the dust and dirt from the dust bin.